Precision MELF Resistors

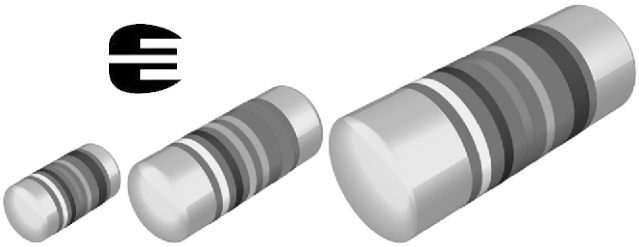

FEATURES

- Approved to EN 140401-803
- AEC-Q200 qualified
- Advanced thin film technology
- Superior stability: Class 0.05
- Wide precision range: 10 Ω to 1 MΩ
- Matte Sn termination on Ni barrier layer
- Compliant to RoHS Directive 2011/65/EU

AUTOMOTIVE GRADE

Pb-free

RoHS COMPLIANT

APPLICATIONS

- Test and measuring equipment
- Industrial and medical electronics

MMU 0102, MMA 0204 and MMB 0207 precision thin film MELF resistors combine the proven reliability of the professional products with an advanced level of precision and stability. Therefore they are perfectly suited for applications in the fields of test and measuring equipment along with industrial and medical electronics.

METRIC SIZE			
DIN	0102	0204	0207
CECC	RC 2211M	RC 3715M	RC 6123M

TECHNICAL SPECIFICATIONS						
DESCRIPTION	**MMU 0102**		**MMA 0204**		**MMB 0207**	
Metric CECC size	RC 2211 M		RC 3715 M		RC 6123 M	
Resistance range	22 Ω to 332 kΩ		10 Ω to 511 kΩ		15 Ω to 1 MΩ	
Resistance tolerance	± 0.5 %; ± 0.25 %; ± 0.1 %				± 0.25 %; ± 0.1 %	
Temperature coefficient	± 25 ppm/K; ± 15 ppm/K					
Operation mode	Precision	Standard	Precision	Standard	Precision	Standard
Rated dissipation, P_{70} (1)	0.06 W	0.2 W	0.07 W	0.25 W	0.11 W	0.4 W
Operating voltage, $U_{max.}$ AC/DC	150 V		200 V		300 V	
Permissible film temperature, ϑ_F max.	85 °C	125 °C	85 °C	125 °C	85 °C	125 °C
Operating temperature range	- 10 °C to 85 °C	- 55 °C to 125 °C	- 10 °C to 85 °C	- 55 °C to 125 °C	- 10 °C to 85 °C	- 55 °C to 125 °C
Max. resistance change at P_{70} for resistance range, $\Delta R/R$ max., after:	22 Ω to 332 kΩ		10 Ω to 511 kΩ		15 Ω to 1 MΩ	
1000 h	≤ 0.05 %	≤ 0.1 %	≤ 0.05 %	≤ 0.1 %	≤ 0.05 %	≤ 0.1 %
8000 h	≤ 0.1 %	≤ 0.2 %	≤ 0.1 %	≤ 0.2 %	≤ 0.1 %	≤ 0.2 %
225 000 h	≤ 0.3 %	≤ 0.6 %	≤ 0.3 %	≤ 0.6 %	≤ 0.3 %	≤ 0.6 %
Permissible voltage against ambient (insulation):						
1 min, U_{ins}	200 V		300 V		500 V	
Continuous	75 V		75 V		75 V	
Failure rate: $FIT_{observed}$	≤ 0.1 x 10^{-9}/h					

Notes

- These resistors do not feature a limited lifetime when operated within the permissible limits. However, resistance value drift increasing over operating time may result in exceeding a limit acceptable to the specific application, thereby establishing a functional lifetime.

(1) The power dissipation on the resistor generates a temperature rise against the local ambient, depending on the heatflow support of the printed-circuit board (thermal resistance). The rated dissipation applies only if the permitted film temperature is not exceeded.

This document is subject to change without notice.
THE PRODUCTS DESCRIBED HEREIN AND THIS DOCUMENT ARE SUBJECT TO SPECIFIC DISCLAIMERS, SET FORTH AT www.vishay.com/doc?91000

DIMENSIONS

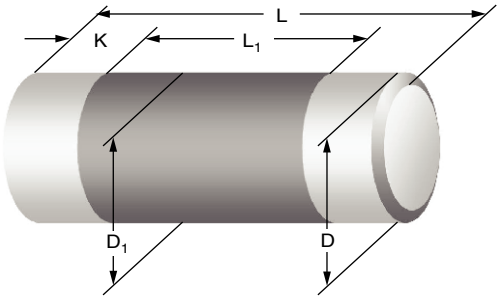

DIMENSIONS AND MASS						
TYPE	L (mm)	D (mm)	$L_{1\ min.}$ (mm)	D_1 (mm)	K (mm)	MASS (mg)
MMU 0102	2.2 + 0/- 0.1	1.1 + 0/- 0.1	1.2	D + 0/- 0.1	0.4 ± 0.05	8
MMA 0204	3.6 + 0/- 0.2	1.4 + 0/- 0.1	1.8	D + 0/- 0.15	0.8 ± 0.1	22
MMB 0207	5.8 + 0/- 0.15	2.2 + 0/- 0.2	3.2	D + 0/- 0.2	1.15 ± 0.1	80

Note

- Color code marking is applied according to IEC 60062 (3) in five bands. Each color band appears as a single solid line, voids are permissible if at least $^2/_3$ of the band is visible from each radial angle of view. The last color band for tolerance is approximately 50 % wider than the other bands. An interrupted band between the 4th and 5th full band indicates the temperature coefficient (yellow = TC25, orange = TC15).

PATTERN STYLES FOR MELF RESISTORS

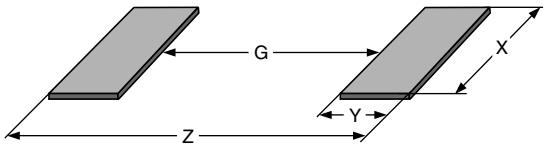

RECOMMENDED SOLDER PAD DIMENSIONS								
TYPE	WAVE SOLDERING				REFLOW SOLDERING			
	G (mm)	Y (mm)	X (mm)	Z (mm)	G (mm)	Y (mm)	X (mm)	Z (mm)
MMU 0102	0.7	1.2	1.5	3.1	1.1	0.8	1.3	2.7
MMA 0204	1.5	1.5	1.8	4.5	1.7	1.2	1.6	4.1
MMB 0207	2.8	2.1	2.6	7.0	3.2	1.7	2.4	6.6

Note

- The given solder pad dimensions reflect the considerations for board design and assembly as outlined e.g. in standards IEC 61188-5-x, or in publication IPC-7351. They do not guarantee any supposed thermal properties, however, they will be found adequate for most general applications.

This document is subject to change without notice.
THE PRODUCTS DESCRIBED HEREIN AND THIS DOCUMENT ARE SUBJECT TO SPECIFIC DISCLAIMERS, SET FORTH AT www.vishay.com/doc?91000

PART NUMBER AND PRODUCT DESCRIPTION

Part Number: MMA02040D5620BB300

M	M	A	0	2	0	4	0	D	5	6	2	0	B	B	3	0	0

TYPE/SIZE	VERSION	TCR	RESISTANCE	TOLERANCE	PACKAGING
MMU0102 **MMA0204** **MMB0207**	**0** = Standard, EN 140401-803, "Version A"	**E** = ± 15 ppm/K **D** = ± 25 ppm/K	3 digit value 1 digit multiplier **Multiplier** **9** = $*10^{-1}$ **0** = $*10^{0}$ **1** = $*10^{1}$ **2** = $*10^{2}$ **3** = $*10^{3}$ **4** = $*10^{4}$	**B** = ± 0.1 % **C** = ± 0.25 % **D** = ± 0.5 %	**B1** **B3** **B0** **B2** **B7** **M3** **M8**

Product Description: MMA 0204-25 0.1 % BL 562R

MMA	0204	-25	0.1 %	BL	562R
TYPE	SIZE	TCR	TOLERANCE	PACKAGING	RESISTANCE
MMU **MMA** **MMB**	**0102** **0204** **0207**	± **15** ppm/K ± **25** ppm/K	± **0.1** % ± **0.25** % ± **0.5** %	**B1** **BL** **B0** **B2** **B7** **M3** **M8**	**562R** = 562 Ω

Notes

- Products can be ordered using either the PART NUMBER or the PRODUCT DESCRIPTION.
- Approval to EN 140401-803, "Version A", is not available for ± 15 ppm/K, ± 0.5 %.

PACKAGING

TYPE	CODE	QUANTITY	CARRIER TAPE	WIDTH	PITCH	REEL DIAMETER
MMU 0102	B1	1000	Antistatic blister tape acc. IEC 60286-3 type II	8 mm	4 mm	180 mm/7"
	B3 = BL	3000				
	B0	10 000				330 mm/13"
	M8	8000	Bulk case acc. IEC 60286-6	-	-	-
MMA 0204	B1	1000	Antistatic blister tape acc. IEC 60286-3 type II	8 mm	4 mm	180 mm/7"
	B3 = BL	3000				
	B0	10 000				330 mm/13"
	M3	3000	Bulk case acc. IEC 60286-6	-	-	-
MMB 0207	B1	1000	Antistatic blister tape acc. IEC 60286-3 type II	12 mm	4 mm	180 mm/7"
	B2	2000				
	B7	7000				330 mm/13"

This document is subject to change without notice.
THE PRODUCTS DESCRIBED HEREIN AND THIS DOCUMENT ARE SUBJECT TO SPECIFIC DISCLAIMERS, SET FORTH AT www.vishay.com/doc?91000

TEMPERATURE COEFFICIENT AND RESISTANCE RANGE				
DESCRIPTION		RESISTANCE		
TCR	TOLERANCE	MMU 0102	MMA 0204	MMB 0207
± 25 ppm/K	± 0.25 %	**47 Ω to 332 kΩ**	**22 Ω to 511 kΩ**	**15 Ω to 1 MΩ**
	± 0.1 %	**100 Ω to 221 kΩ**	**43 Ω to 511 kΩ**	**33 Ω to 1 MΩ**
± 15 ppm/K	± 0.5 %	22 Ω to 100 kΩ	10 Ω to 332 kΩ	-
	± 0.25 %	47 Ω to 100 kΩ	22 Ω to 332 kΩ	-
	± 0.1 %	**100 Ω to 100 kΩ**	**43 Ω to 332 kΩ**	**33 Ω to 1 MΩ**

Notes
- Resistance ranges printed in bold are preferred TCR/tolerance combinations with optimized availability.
- Resistance values to be selected from E24 and E192 series, for other values please contact the factory.
- Approval to EN 140401-803, "Version A", is not available for ± 15 ppm/K; ± 0.5 %.

DESCRIPTION

Production is strictly controlled and follows an extensive set of instructions established for reproducibility. A homogeneous film of metal alloy is deposited on a high grade ceramic body (Al_2O_3) and conditioned to achieve the desired temperature coefficient. Nickel plated steel termination caps are firmly pressed on the metallised rods. A special laser is used to achieve the target value by smoothly cutting a helical groove in the resistive layer without damaging the ceramics. A further conditioning is applied in order to stabilise the trimming result. The resistor elements are covered by a protective coating designed for electrical, mechanical and climatic protection. The terminations receive a final pure tin on nickel plating. Five color code rings designate the resistance value and tolerance in accordance with **IEC 60062** (3).

The result of the determined production is verified by an extensive testing procedure performed on 100 % of the individual resistors. This includes pilse load screening (for $R \geq 10\ \Omega$) and additional non-linearity screening (for $R \geq 30\ \Omega$) for the elimination of products with a potential risk of early life failures according to EN 140401-803, 2.1.2.2. Only accepted products are laid directly into the blister tape in accordance with **IEC 60286-3, Type II** (3) or bulk case in accordance with **IEC 60286-6** (3).

ASSEMBLY

The resistors are suitable for processing on automatic SMD assembly systems. They are suitable for automatic soldering using wave, reflow or vapour phase as shown in **IEC 61760-1** (3). Solderability is specified for 2 years after production or requalification, however, excellent solderability is proven after extended storage in excess of 10 years. The permitted storage time is 20 years.

The resistors are completely lead (Pb)-free, the pure tin plating provides compatibility with lead (Pb)-free soldering processes. The immunity of the plating against tin whisker growth has been proven under extensive testing.

The encapsulation is resistant to all cleaning solvents commonly used in the electronics industry, including alcohols, esters and aqueous solutions. The suitability of conformal coatings, if applied, shall be qualified by appropriate means to ensure the long-term stability of the whole system.

All products comply with the **GADSL** (1) and the **CEFIC- EECA-EICTA** (2) list of legal restrictions on hazardous substances. This includes full compliance with the following directives:

- 2000/53/EC End of Vehicle life Directive (ELV) and Annex II (ELV II)
- 2011/65/EU Restriction of the use of Hazardous Substances Directive (RoHS)
- 2002/96/EC Waste Electrical and Electronic Equipment Directive (WEEE)

APPROVALS

The resistors are approved within the IECQ-CECC Quality Assessment System for Electronic Components to the detail specification **EN 140401-803** which refers to **EN 60115-1**, **EN 140400** and the variety of environmental test procedures of the **IEC 60068** (3) series.

Conformity is attested by the use of the **CECC** logo ( ) as the mark of conformity on the package label.

Vishay Beyschlag has achieved **"Approval of Manufacturer"** in accordance with **IEC QC 001002-3, clause 2**. The release certificate for **"Technology Approval Schedule"** in accordance with **CECC 240001** based on **IEC QC 001002-3, clause 6** is granted for the Vishay Beyschlag manufacturing process.
The resistors are qualified according to AEC-Q200.

RELATED PRODUCTS

For thin film products with a wider resistance, see the datasheet:

- "Professional MELF Resistors" (www.vishay.com/doc?28713)

For products with tighter precision specification, see the datasheet:

- "High Precision MELF resistors" (www.vishay.com/doc?28715)

Resistors are available with established reliability in accordance with **EN 140401-803 Version E**. Please refer to datasheet "MELF Resistors with Established Reliability" (www.vishay.com/doc?28707).

Notes
(1) Global Automotive Declarable Substance List, see www.gadsl.org.
(2) CEFIC (European Chemical Industry Council), EECA (European Electronic Component Manufacturers Association), EICTA (European trade organisation representing the information and communications technology and consumer electronics), see www.eicta.org/index.php?id=995 → issues → environment policy → chemicals → chemicals for electronics.
(3) The quoted IEC standards are also released as EN standards with the same number and identical contents.

This document is subject to change without notice.
THE PRODUCTS DESCRIBED HEREIN AND THIS DOCUMENT ARE SUBJECT TO SPECIFIC DISCLAIMERS, SET FORTH AT www.vishay.com/doc?91000

FUNCTIONAL PERFORMANCE

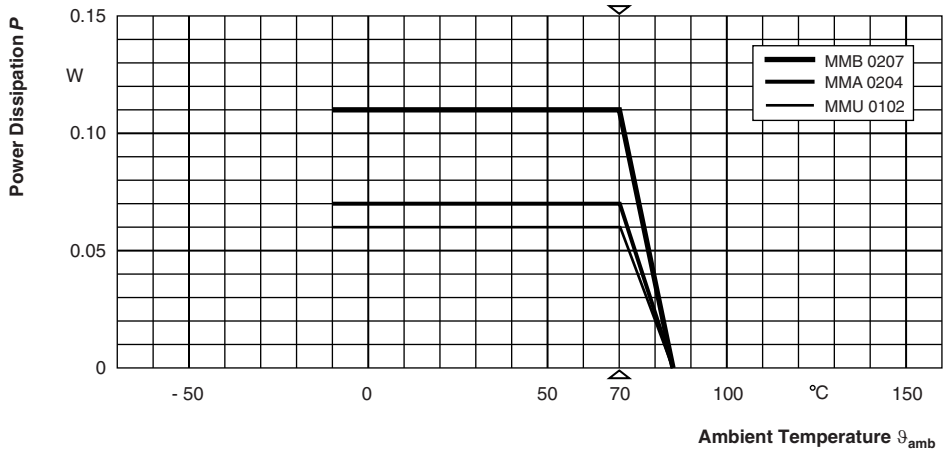

Derating - Precision Operation

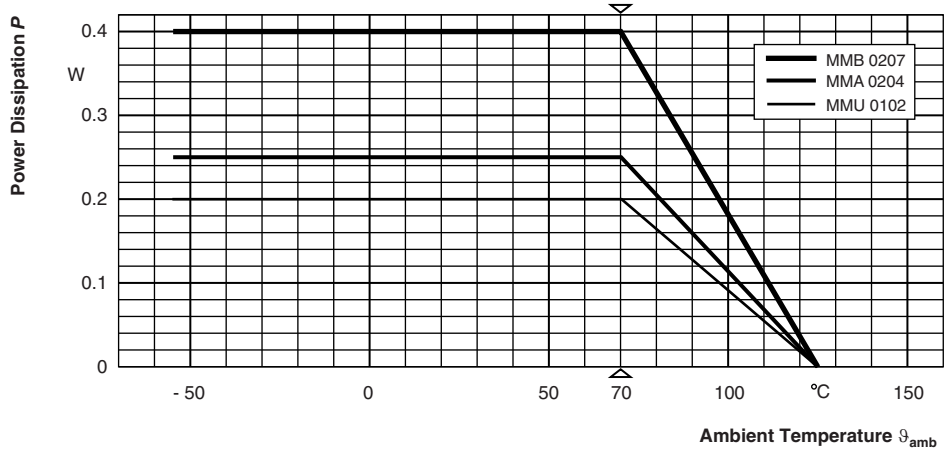

Derating - Standard Operation

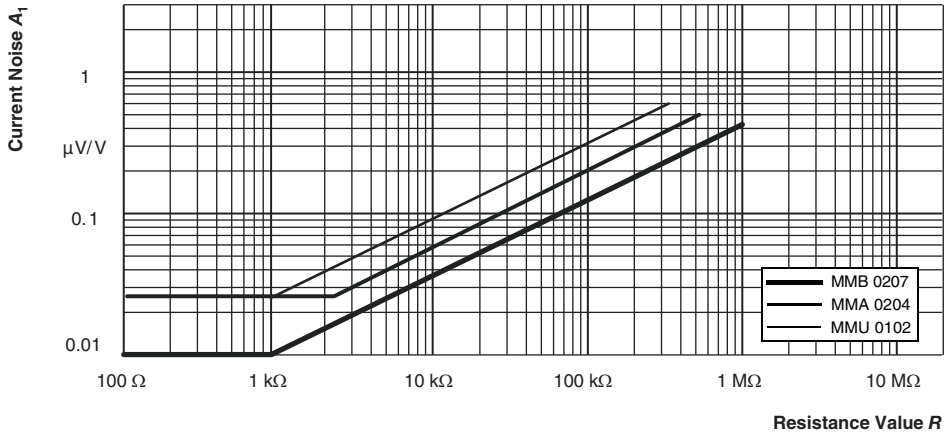

In accordance with IEC 60195

Current Noise - A_1

This document is subject to change without notice.
THE PRODUCTS DESCRIBED HEREIN AND THIS DOCUMENT ARE SUBJECT TO SPECIFIC DISCLAIMERS, SET FORTH AT www.vishay.com/doc?91000

TESTS AND REQUIREMENTS

All tests are carried out in accordance with the following specifications:

EN 60115-1, generic specification

EN 140400, sectional specification

EN 140401-803, detail specification

The components are approved in accordance with the IECQ-CECC-system, where applicable. For the full test schedule refer to the documents listed above. The testing also covers most of the requirements specified by EIA/IS-703 and JIS-C-5202.

The tests are carried out under standard atmospheric conditions in accordance with IEC 60068-1, 5.3 [(4)]. Climatic category LCT/UCT/56 (rated temperature range: Lower category temperature, upper category temperature; damp heat, steady state, test duration 56 days) is valid.

Unless otherwise specified the following values apply:

Temperature: 15 °C to 35 °C

Relative humidity: 45 % to 75 %

Air pressure: 86 kPa to 106 kPa (860 mbar to 1060 mbar).

The components are mounted for testing on printed-circuit boards in accordance with EN 140400, 2.3.3, unless otherwise specified.

The requirements stated in Test Procedures and Requirements table are based on the required tests and permitted limits of EN 140401-803. However, some additional tests and a number of improvements against those minimum requirements have been included. The stated requirements for long-term tests are typically fulfilled with a statistical safety of at least $\bar{x}$ + 5 s.

TEST PROCEDURES AND REQUIREMENTS

EN 60115-1 CLAUSE	IEC 60068-2 [(4)] TEST METHOD	TEST	PROCEDURE	REQUIREMENTS PERMISSIBLE CHANGE (Δ*R*)		
			Stability for product types:	STABILITY CLASS 0.05 OR BETTER	STABILITY CLASS 0.1 OR BETTER	STABILITY CLASS 0.25 OR BETTER
			MMU 0102	100 Ω to 100 kΩ	43 Ω to 147 kΩ	22 Ω to 332 kΩ
			MMA 0204	100 Ω to 100 kΩ	43 Ω to 221 kΩ	10 Ω to 511 kΩ
			MMB 0207	100 Ω to 270 kΩ	43 Ω to 510 kΩ	15 Ω to 1 MΩ
4.5	-	Resistance	-	± 0.5 % *R*; ± 0.25 % *R*; ± 0.1 % *R*		
4.8.4.2	-	Temperature coefficient	At (20/- 55/20) °C and (20/125/20) °C	± 25 ppm/K, ± 15 ppm/K		
4.25.1	-	Endurance at 70 °C: precision operation mode	$U = \sqrt{P_{70} \times R} \leq U_{max.}$; 1.5 h on; 0.5 h off; 70 °C; 1000 h 70 °C; 8000 h	± (0.05 % *R* + 5 mΩ) ± (0.1 % *R* + 5 mΩ)		
		Endurance at 70 °C: standard operation mode	$U = \sqrt{P_{70} \times R} \leq U_{max.}$; 1.5 h on; 0.5 h off; 70 °C; 1000 h 70 °C; 8000 h	± (0.1 % *R* + 5 mΩ) ± (0.2 % *R* + 5 mΩ)		
4.25.3	-	Endurance at upper category temperature	85 °C; 1000 h	± (0.02 % *R* + 5 mΩ)	± (0.05 % *R* + 5 mΩ)	± (0.1 % *R* + 5 mΩ)
			125 °C; 1000 h	± (0.05 % *R* + 5 mΩ)	± (0.1 % *R* + 5 mΩ)	± (0.15 % *R* + 5 mΩ)
4.24	78 (Cab)	Damp heat, steady state	(40 ± 2) °C; 56 days; (93 ± 3) % RH	± (0.05 % *R* + 5 mΩ)	± (0.1 % *R* + 5 mΩ)	

This document is subject to change without notice.
THE PRODUCTS DESCRIBED HEREIN AND THIS DOCUMENT ARE SUBJECT TO SPECIFIC DISCLAIMERS, SET FORTH AT www.vishay.com/doc?91000

TEST PROCEDURES AND REQUIREMENTS						
EN 60115-1 CLAUSE	IEC 60068-2 (4) TEST METHOD	TEST	PROCEDURE	REQUIREMENTS PERMISSIBLE CHANGE (ΔR)		
			Stability for product types:	STABILITY CLASS 0.05 OR BETTER	STABILITY CLASS 0.1 OR BETTER	STABILITY CLASS 0.25 OR BETTER
			MMU 0102	100 Ω to 100 kΩ	43 Ω to 147 kΩ	22 Ω to 332 kΩ
			MMA 0204	100 Ω to 100 kΩ	43 Ω to 221 kΩ	10 Ω to 511 kΩ
			MMB 0207	100 Ω to 270 kΩ	43 Ω to 510 kΩ	15 Ω to 1 MΩ
4.39	67 (Cy)	Damp heat, steady state, accelerated	(85 ± 2) °C; (85 ± 5) % RH; $U = 0.3 \times \sqrt{P_{70} \times R}$ ≤ 100 V; 1000 h	± (0.15 % R + 5 mΩ)	± (0.25 % R + 5 mΩ)	
4.23		Climatic sequence:				
4.23.2	2 (Bb)	dry heat	UCT; 16 h			
4.23.3	30 (Db)	damp heat, cyclic	55 °C; 24 h; ≥ 90 % RH; 1 cycle			
4.23.4	1 (Ab)	cold	LCT; 2 h			
4.23.5	13 (M)	low air pressure	8.5 kPa; 2 h; (25 ± 10) °C			
4.23.6	30 (Db)	damp heat, cyclic	55 °C; 24 h; ≥ 90 % RH; 5 cycles			
4.23.7	-	DC load	$U = \sqrt{P_{70} \times R}$ ≤ $U_{max.}$; 1 min.			
			LCT = - 10 °C; UCT = 85 °C	± (0.05 % R + 5 mΩ)	± (0.1 % R + 5 mΩ)	-
			LCT = - 55 °C; UCT = 125 °C	-	-	± (0.1 % R + 5 mΩ)
-	1 (Ab)	Cold	- 55 °C; 2 h	± (0.02 % R + 5 mΩ)		
4.19	14 (Na)	Rapid change of temperature	30 min at LCT; 30 min at UCT; LCT = - 10 °C; UCT = 85 °C			
			5 cycles	± (0.01 % R + 5 mΩ)	± (0.02 % R + 5 mΩ)	-
			1000 cycles	± (0.1 % R + 5 mΩ)	± (0.1 % R + 5 mΩ)	-
			LCT = - 55 °C; UCT = 125 °C			
			5 cycles	-	-	± (0.025 % R + 5 mΩ)
			1000 cycles	-	-	± (0.2 % R + 5 mΩ)
4.13	-	Short time overload; precision operation mode	$U = 2.5 \times \sqrt{P_{70} \times R}$ ≤ 2 x $U_{max.}$; 5 s	± (0.01 % R + 5 mΩ)	± (0.02 % R + 5 mΩ)	± (0.03 % R + 5 mΩ)
		Short time over load; standard operation mode		± (0.05 % R + 5 mΩ)		
4.27	-	Single pulse high voltage overload; standard operation mode	Severity no. 4: $U = 10 \times \sqrt{P_{70} \times R}$ ≤ 2 x $U_{max.}$; 10 pulses 10 µs/700 µs	± (0.25 % R + 5 mΩ) (1)		

This document is subject to change without notice.
THE PRODUCTS DESCRIBED HEREIN AND THIS DOCUMENT ARE SUBJECT TO SPECIFIC DISCLAIMERS, SET FORTH AT www.vishay.com/doc?91000

TEST PROCEDURES AND REQUIREMENTS

EN 60115-1 CLAUSE	IEC 60068-2 (4) TEST METHOD	TEST	PROCEDURE	REQUIREMENTS PERMISSIBLE CHANGE (ΔR)		
			Stability for product types:	**STABILITY CLASS 0.05 OR BETTER**	**STABILITY CLASS 0.1 OR BETTER**	**STABILITY CLASS 0.25 OR BETTER**
			MMU 0102	100 Ω to 100 kΩ	43 Ω to 147 kΩ	22 Ω to 332 kΩ
			MMA 0204	100 Ω to 100 kΩ	43 Ω to 221 kΩ	10 Ω to 511 kΩ
			MMB 0207	100 Ω to 270 kΩ	43 Ω to 510 kΩ	15 Ω to 1 MΩ
4.37	-	Periodic electric overload; standard operation mode	$U = \sqrt{15 \text{ x } P_{70} \text{ x } R}$ ≤ 2 x $U_{max.}$; 0.1 s on; 2.5 s off; 1000 cycles	± (0.5 % R + 5 mΩ) (1)		
4.22	6 (Fc)	Vibration	Endurance by sweeping; 10 Hz to 2000 Hz; no resonance; amplitude ≤ 1.5 mm or ≤ 200 m/s^2; 7.5 h	± (0.01 % R + 5 mΩ)	± (0.02 % R + 5 mΩ)	± (0.03 % R + 5 mΩ)
4.40	-	Electrostatic discharge (Human Body Model)	IEC 61340-3-1 (4); 3 pos. + 3 neg. discharges MMU 0102: 1.5 kV MMA 0204: 2 kV MMB 0207: 4 kV	± (0.5 % R + 50 mΩ) (1)		
4.17.2	58 (Td)	Solderability	Solder bath method; SnPb40; non-activated flux; (215 ± 3) °C; (3 ± 0.3) s	Good tinning (≥ 95 % covered); no visible damage		
			Solder bath method; SnAg3Cu0.5 or SnAg3.5; non-activated flux; (235 ± 3) °C; (2 ± 0.2) s	Good tinning (≥ 95 % covered); no visible damage		
4.18.2	58 (Td)	Resistance to soldering heat	Solder bath method; (260 ± 5) °C; (10 ± 1) s	Note (2)		± (0.05 % R + 10 mΩ)
			Reflow method 2 (IR/forced gas convection); (260 ± 5) °C; (10 ± 1) s	± (0.01 % R + 5 mΩ)	± (0.025 % R + 5 mΩ)	
4.29	45 (XA)	Component solvent resistance	Isopropyl alcohol; 50 °C; method 2	No visible damage		
4.30	45 (XA)	Solvent resistance of marking	Isopropyl alcohol; 50 °C; method 1, toothbrush	Marking legible; no visible damage		
4.32	21 (Ue_3)	Shear (adhesion)	45 N	No visible damage		
4.33	21 (Ue_1)	Substrate bending	Depth 2 mm, 3 times	No visible damage, no open circuit in bent position ± (0.02 % R + 10 mΩ) (3)		± (0.05 % R + 10 mΩ) (3)
4.7	-	Voltage proof	$U_{RMS} = U_{ins}$; 60 s	No flashover or breakdown		
4.35	-	Flammability	IEC 60 695-11-5 (4), needle flame test; 10 s	No burning after 30 s		

Notes

(1) The pulse load stability of professional MELF resistors applies for precision resistors also. However, severe pulse loads are likely to jeopardize precision stability requirements.

(2) Wave soldering is not recommended.

(3) Special requirements apply to MICRO-MELF, MMU 0102:
- R < 100 Ω: ± (0.15 % R + 10 mΩ).
- 100 Ω ≤ R ≤ 10 kΩ: ± 0.1 % R.
- R > 10 kΩ: ± 0.05 % R.

(4) The quoted IEC standards are also released as EN standards with the same number and identical contents.

This document is subject to change without notice.
THE PRODUCTS DESCRIBED HEREIN AND THIS DOCUMENT ARE SUBJECT TO SPECIFIC DISCLAIMERS, SET FORTH AT www.vishay.com/doc?91000

HISTORICAL 12NC INFORMATION

- The resistors had a 12-digit numeric code starting with 2312.
- The subsequent 4 digits indicated the resistor type, specification and packaging; see the 12NC table.
- The remaining 4 digits indicated the resistance value:
  - The first 3 digits indicated the resistance value.
  - The last digit indicated the resistance decade in accordance with the 12NC Indicating Resistance Decade table.

Last Digit of 12NC Indicating Resistance Decade

RESISTANCE DECADE	LAST DIGIT
10 Ω to 99.9 Ω	9
100 Ω to 999 Ω	1
1 kΩ to 9.99 kΩ	2
10 kΩ to 99.9 kΩ	3
100 kΩ to 999 kΩ	4
1 MΩ to 9.99 MΩ	5

Historical 12NC Example

The 12NC of a MMA 0204 resistor, value 47 kΩ and TCR 25 with ± 0.1 % tolerance, supplied in blister tape of 3000 units per reel was: 2312 156 74703.

HISTORICAL 12NC - Resistor type and packaging

DESCRIPTION			2312			
			BLISTER TAPE ON REEL			BULK CASE
TYPE	**TCR**	**TOL.**	**B1 1000 units**	**BL 3000 units**	**B0 10 000 units**	**M8 8000 units**
MMU 0102	± 25 ppm/K	± 0.25 %	171 6....	**166 6....**	176 6....	061 6....
		± 0.1 %	171 7....	**166 7....**	176 7....	061 7....
	± 15 ppm/K	± 0.5 %	172 5....	167 5....	177 5....	062 5....
		± 0.25 %	172 6....	167 6....	177 6....	062 6....
		± 0.1 %	172 7....	**167 7....**	177 7....	062 7....
TYPE	**TCR**	**TOL.**	**B1 1000 units**	**BL 3000 units**	**B0 10 000 units**	**M3 3000 units**
MMA 0204	± 25 ppm/K	± 0.25 %	141 6....	**156 6....**	146 6....	041 6....
		± 0.1 %	141 7....	**156 7....**	146 7....	041 7....
	± 15 ppm/K	± 0.5 %	142 5....	157 5....	147 5....	042 5....
		± 0.25 %	142 6....	157 6....	147 6....	042 6....
		± 0.1 %	142 7....	**157 7....**	147 7....	042 7....
TYPE	**TCR**	**TOL.**	**B1 1000 units**	**B2 2000 units**	**B7 7000 units**	
MMB 0207	± 25 ppm/K	± 0.25 %	181 6....	**196 6....**	186 6....	
		± 0.1 %	181 7....	**196 7....**	186 7....	
	± 15 ppm/K	± 0.1 %	182 7....	**197 7....**	187 7....	

This document is subject to change without notice.
THE PRODUCTS DESCRIBED HEREIN AND THIS DOCUMENT ARE SUBJECT TO SPECIFIC DISCLAIMERS, SET FORTH AT www.vishay.com/doc?91000

Disclaimer

ALL PRODUCT, PRODUCT SPECIFICATIONS AND DATA ARE SUBJECT TO CHANGE WITHOUT NOTICE TO IMPROVE RELIABILITY, FUNCTION OR DESIGN OR OTHERWISE.

Vishay Intertechnology, Inc., its affiliates, agents, and employees, and all persons acting on its or their behalf (collectively, "Vishay"), disclaim any and all liability for any errors, inaccuracies or incompleteness contained in any datasheet or in any other disclosure relating to any product.

Vishay makes no warranty, representation or guarantee regarding the suitability of the products for any particular purpose or the continuing production of any product. To the maximum extent permitted by applicable law, Vishay disclaims (i) any and all liability arising out of the application or use of any product, (ii) any and all liability, including without limitation special, consequential or incidental damages, and (iii) any and all implied warranties, including warranties of fitness for particular purpose, non-infringement and merchantability.

Statements regarding the suitability of products for certain types of applications are based on Vishay's knowledge of typical requirements that are often placed on Vishay products in generic applications. Such statements are not binding statements about the suitability of products for a particular application. It is the customer's responsibility to validate that a particular product with the properties described in the product specification is suitable for use in a particular application. Parameters provided in datasheets and/or specifications may vary in different applications and performance may vary over time. All operating parameters, including typical parameters, must be validated for each customer application by the customer's technical experts. Product specifications do not expand or otherwise modify Vishay's terms and conditions of purchase, including but not limited to the warranty expressed therein.

Except as expressly indicated in writing, Vishay products are not designed for use in medical, life-saving, or life-sustaining applications or for any other application in which the failure of the Vishay product could result in personal injury or death. Customers using or selling Vishay products not expressly indicated for use in such applications do so at their own risk. Please contact authorized Vishay personnel to obtain written terms and conditions regarding products designed for such applications.

No license, express or implied, by estoppel or otherwise, to any intellectual property rights is granted by this document or by any conduct of Vishay. Product names and markings noted herein may be trademarks of their respective owners.

Material Category Policy

Vishay Intertechnology, Inc. hereby certifies that all its products that are identified as RoHS-Compliant fulfill the definitions and restrictions defined under Directive 2011/65/EU of The European Parliament and of the Council of June 8, 2011 on the restriction of the use of certain hazardous substances in electrical and electronic equipment (EEE) - recast, unless otherwise specified as non-compliant.

Please note that some Vishay documentation may still make reference to RoHS Directive 2002/95/EC. We confirm that all the products identified as being compliant to Directive 2002/95/EC conform to Directive 2011/65/EU.

Vishay Intertechnology, Inc. hereby certifies that all its products that are identified as Halogen-Free follow Halogen-Free requirements as per JEDEC JS709A standards. Please note that some Vishay documentation may still make reference to the IEC 61249-2-21 definition. We confirm that all the products identified as being compliant to IEC 61249-2-21 conform to JEDEC JS709A standards.

Компания «ЭлектроПласт» предлагает заключение долгосрочных отношений при поставках импортных электронных компонентов на взаимовыгодных условиях!

Наши преимущества:

- Оперативные поставки широкого спектра электронных компонентов отечественного и импортного производства напрямую от производителей и с крупнейших мировых складов;
- Поставка более 17-ти миллионов наименований электронных компонентов;
- Поставка сложных, дефицитных, либо снятых с производства позиций;
- Оперативные сроки поставки под заказ (от 5 рабочих дней);
- Экспресс доставка в любую точку России;
- Техническая поддержка проекта, помощь в подборе аналогов, поставка прототипов;
- Система менеджмента качества сертифицирована по Международному стандарту ISO 9001;
- Лицензия ФСБ на осуществление работ с использованием сведений, составляющих государственную тайну;
- Поставка специализированных компонентов (Xilinx, Altera, Analog Devices, Intersil, Interpoint, Microsemi, Aeroflex, Peregrine, Syfer, Eurofarad, Texas Instrument, Miteq, Cobham, E2V, MA-COM, Hittite, Mini-Circuits,General Dynamics и др.);

Помимо этого, одним из направлений компании «ЭлектроПласт» является направление «Источники питания». Мы предлагаем Вам помощь Конструкторского отдела:

- Подбор оптимального решения, техническое обоснование при выборе компонента;
- Подбор аналогов;
- Консультации по применению компонента;
- Поставка образцов и прототипов;
- Техническая поддержка проекта;
- Защита от снятия компонента с производства.

Как с нами связаться

Телефон: 8 (812) 309 58 32 (многоканальный)
Факс: 8 (812) 320-02-42
Электронная почта: org@eplast1.ru
Адрес: 198099, г. Санкт-Петербург, ул. Калинина, дом 2, корпус 4, литера А.