Cree® XLamp® CXA1512 LED

PRODUCT DESCRIPTION

The XLamp CXA1512 LED array expands Cree's family of high-flux, multi-die arrays in a smaller, easy-to-use platform. With XLamp lighting-class reliability, the CXA1512's small, uniform emitting surface enables both directional and non-directional lighting applications including lamp retrofit and luminaire designs. Available in 2-step and 4-step color consistency, and featuring a 9-mm optical source, the CXA1512 brings new levels of flux and efficacy to this form factor.

FEATURES

- Available in ANSI white bins as well as 4-step and 2-step EasyWhite bins at 2700K, 3000K, 3500K, 4000K and 5000K CCT
- 80 and 90 minimum CRI options
- Forward voltage: 37 V
- 85 °C binning and characterization
- Maximum drive current: 500 mA
- 115° viewing angle, uniform chromaticity profile
- Top-side solder connections
- Thermocouple attach point
- NEMA SSL-3 2011 standard flux bins
- UL-recognized component (E349212)

TABLE OF CONTENTS

Characteristics 2
Flux Characteristics, Standard Order Codes and Bins 2
Flux Characteristics, Standard Order Codes and Bins, 90 CRI 4
Flux Characteristics, Standard Order Codes and Bins, 80 CRI 5
Relative Spectral Power Distribution . 6
Relative Luminous Flux vs. Junction Temperature 6
Electrical Characteristics 7
Relative Luminous Flux vs. Current .. 7
Relative Chromaticity vs. Current and Temperature 8
Typical Spatial Distribution 9
Performance Groups - Brightness..... 9
Performance Groups - Chromaticity.10
Cree EasyWhite Bins Plotted on the 1931 CIE Color Space 11
Cree ANSI White Bins Plotted on the 1931 CIE Color Space 12
Bin and Order Code Formats 13
Mechanical Dimensions.....13
Notes.....14
Packaging.....15

Copyright © 2012-2013 Cree, Inc. All rights reserved. The information in this document is subject to change without notice. Cree®, the Cree logo and XLamp® are registered trademarks of Cree, Inc.

Cree, Inc.
4600 Silicon Drive
Durham, NC 27703
USA Tel: +1.919.313.5300

CHARACTERISTICS

Characteristics	Unit	Minimum	Typical	Maximum
Effective thermal resistance, junction to case	°C/W		2.1	
Viewing angle (FWHM)	degrees		115	
ESD classification (HBM per Mil-Std-883D)			Class 2	
DC forward current	mA		350	500
Reverse current	mA			-0.1
Forward voltage (@ 350 mA, 85 °C)	V		37	
Forward voltage (@ 350 mA, 25 °C)	V		38	42
LED junction temperature	°C			150
Temperature coefficient of voltage	mV/°C		-16	

FLUX CHARACTERISTICS, STANDARD ORDER CODES AND BINS (I_F = 350 mA, T_J = 85 °C)

The following tables provide order codes for XLamp CXA1512 LEDs. For a complete description of the order code nomenclature, please reference Bin and Order Code Formats (page 13).

Color	CCT Range	Base Order Codes Min. Luminous Flux @ 350 mA			2-Step Order Code		4-Step Order Code	
		Group	Flux (lm) @ 85 °C	Flux (lm) @ 25 °C*	Chromaticity Region		Chromaticity Region	
EasyWhite	5000K	M2	1380	1563	50H	CXA1512-0000-000N00M250H	50F	CXA1512-0000-000N00M250F
		M4	1485	1682		CXA1512-0000-000N00M450H		CXA1512-0000-000N00M450F
	4000K	K4	1290	1461	40H	CXA1512-0000-000N00K440H	40F	CXA1512-0000-000N00K440F
		M2	1380	1563		CXA1512-0000-000N00M240H		CXA1512-0000-000N00M240F
		M4	1485	1682		CXA1512-0000-000N00M440H		CXA1512-0000-000N00M440F
	3500K	K2	1200	1359	35H	CXA1512-0000-000N00K235H	35F	CXA1512-0000-000N00K235F
		K4	1290	1461		CXA1512-0000-000N00K435H		CXA1512-0000-000N00K435F
		M2	1380	1563		CXA1512-0000-000N00M235H		CXA1512-0000-000N00M235F
	3000K	K2	1200	1359	30H	CXA1512-0000-000N00K230H	30F	CXA1512-0000-000N00K230F
		K4	1290	1461		CXA1512-0000-000N00K430H		CXA1512-0000-000N00K430F
	2700K	J4	1120	1269	27H	CXA1512-0000-000N00J427H	27F	CXA1512-0000-000N00J427F
		K2	1200	1359		CXA1512-0000-000N00K227H		CXA1512-0000-000N00K227F
		K4	1290	1461		CXA1512-0000-000N00K427H		CXA1512-0000-000N00K427F

Notes:
- Cree maintains a tolerance of ±7% on flux and power measurements, ±0.005 on chromaticity (CCx, CCy) measurements and a tolerance of ±2 on CRI measurements.
- Minimum CRI for standard color temperatures 0E8, 27F, 27H, 0E7, 30F, 30H, 0E6, 35F, 35H is 80.
- Minimum CRI for standard color temperatures 0E5, 40F, 40H, 0E3, 50F, 50H is 70.
- Typical CRI for standard color temperatures 0E5, 40F, 40H, 0E3, 50F, 50H is 75.

* Flux values @ 25 °C are calculated and for reference only.

Copyright © 2012-2013 Cree, Inc. All rights reserved. The information in this document is subject to change without notice. Cree®, the Cree logo and XLamp® are registered trademarks of Cree, Inc.

Color	CCT Range	Base Order Codes Min. Luminous Flux @ 350 mA			Chromaticity Regions	Order Code
		Group	Flux (lm) @ 85 °C	Flux (lm) @ 25 °C*		
ANSI White	5000K	M2	1380	1563	3A0, 3B0, 3C0, 3D0	CXA1512-0000-000N00M20E3
		M4	1485	1682		CXA1512-0000-000N00M40E3
	4000K	K4	1290	1461	5A0, 5B0, 5C0, 5D0	CXA1512-0000-000N00K40E5
		M2	1380	1563		CXA1512-0000-000N00M20E5
		M4	1485	1682		CXA1512-0000-000N00M40E5
	3500K	K2	1200	1359	6A0, 6B0, 6C0, 6D0	CXA1512-0000-000N00K20E6
		K4	1290	1461		CXA1512-0000-000N00K40E6
		M2	1380	1563		CXA1512-0000-000N00M20E6
	3000K	K2	1200	1359	7A0, 7B0, 7C0, 7D0	CXA1512-0000-000N00K20E7
		K4	1290	1461		CXA1512-0000-000N00K40E7
	2700K	J4	1120	1269	8A0, 8B0, 8C0, 8D0	CXA1512-0000-000N00J40E8
		K2	1200	1359		CXA1512-0000-000N00K20E8
		K4	1290	1461		CXA1512-0000-000N00K40E8

Notes:

- Cree maintains a tolerance of ±7% on flux and power measurements, ±0.005 on chromaticity (CCx, CCy) measurements and a tolerance of ±2 on CRI measurements.
- Minimum CRI for standard color temperatures 0E8, 27F, 27H, 0E7, 30F, 30H, 0E6, 35F, 35H is 80.
- Minimum CRI for standard color temperatures 0E5, 40F, 40H, 0E3, 50F, 50H is 70.
- Typical CRI for standard color temperatures 0E5, 40F, 40H, 0E3, 50F, 50H is 75.

* Flux values @ 25 °C are calculated and for reference only.

Copyright © 2012-2013 Cree, Inc. All rights reserved. The information in this document is subject to change without notice. Cree®, the Cree logo and XLamp® are registered trademarks of Cree, Inc.

FLUX CHARACTERISTICS, STANDARD ORDER CODES AND BINS, 90 CRI (I_F = 350 mA, T_J= 85 °C)

The following tables provide order codes for XLamp CXA1512 90 CRI minimum LEDs. For a complete description of the order code nomenclature, please reference Bin and Order Code Formats (page 13).

Color	CCT Range	Base Order Codes Min. Luminous Flux @ 350 mA			2-Step Order Code		4-Step Order Code	
		Group	Flux (lm) @ 85 °C	Flux (lm) @ 25 °C*	Chromaticity Region		Chromaticity Region	
EasyWhite	3000K	H2	900	1019	30H	CXA1512-0000-000N0UH230H	30F	CXA1512-0000-000N0UH230F
		H4	970	1099		CXA1512-0000-000N0UH430H		CXA1512-0000-000N0UH430F
		J2	1040	1178		CXA1512-0000-000N0UJ230H		CXA1512-0000-000N0UJ230F
	2700K	G4	840	952	27H	CXA1512-0000-000N0UG427H	27F	CXA1512-0000-000N0UG427F
		H2	900	1019		CXA1512-0000-000N0UH227H		CXA1512-0000-000N0UH227F
		H4	970	1099		CXA1512-0000-000N0UH427H		CXA1512-0000-000N0UH427F

Color	CCT Range	Base Order Codes Min Luminous Flux @ 350 mA			Chromaticity Regions	Order Code
		Group	Flux (lm) @ 85 °C	Flux (lm) @ 25 °C*		
ANSI White	3000K	H2	900	1019	7A0, 7B0, 7C0, 7D0	CXA1512-0000-000N0UH20E7
		H4	970	1099		CXA1512-0000-000N0UH40E7
		J2	1040	1178		CXA1512-0000-000N0UJ20E7
	2700K	G4	840	952	8A0, 8B0, 8C0, 8D0	CXA1512-0000-000N0UG40E8
		H2	900	1019		CXA1512-0000-000N0UH20E8
		H4	970	1099		CXA1512-0000-000N0UH40E8

Notes:
- Cree maintains a tolerance of ±7% on flux and power measurements, ±0.005 on chromaticity (CCx, CCy) measurements and a tolerance of ±2 on CRI measurements.
- Minimum CRI for high CRI color temperatures 0E8, 27F, 27H, 0E7, 30F, 30H is 90.

* Flux values @ 25 °C are calculated and for reference only.

Copyright © 2012-2013 Cree, Inc. All rights reserved. The information in this document is subject to change without notice. Cree®, the Cree logo and XLamp® are registered trademarks of Cree, Inc.

FLUX CHARACTERISTICS, STANDARD ORDER CODES AND BINS, 80 CRI (I_F = 350 mA, T_J= 85 °C)

The following tables provide order codes for XLamp CXA1512 80 CRI minimum LEDs. For a complete description of the order code nomenclature, please reference Bin and Order Code Formats (page 13).

Color	CCT Range	Base Order Codes Min. Luminous Flux @ 350 mA			2-Step Order Code		4-Step Order Code	
		Group	Flux (lm) @ 85 °C	Flux (lm) @ 25 °C*	Chromaticity Region		Chromaticity Region	
EasyWhite	5000K	K2	1200	1359	50H	CXA1512-0000-000N0HK250H	50F	CXA1512-0000-000N0HK250F
		K4	1290	1461		CXA1512-0000-000N0HK450H		CXA1512-0000-000N0HK450F
		M2	1380	1563		CXA1512-0000-000N0HM250H		CXA1512-0000-000N0HM250F
	4000K	K2	1200	1359	40H	CXA1512-0000-000N0HK240H	40F	CXA1512-0000-000N0HK240F
		K4	1290	1461		CXA1512-0000-000N0HK440H		CXA1512-0000-000N0HK440F
		M2	1380	1563		CXA1512-0000-000N0HM240H		CXA1512-0000-000N0HM240F

Color	CCT Range	Base Order Codes Min Luminous Flux @ 350 mA			Chromaticity Regions	Order Code
		Group	Flux (lm) @ 85 °C	Flux (lm) @ 25 °C*		
ANSI White	5000K	K2	1200	1359	3A0, 3B0, 3C0, 3D0	CXA1512-0000-000N0HK20E3
		K4	1290	1461		CXA1512-0000-000N0HK40E3
		M2	1380	1563		CXA1512-0000-000N0HM20E3
	4000K	K2	1200	1359	5A0, 5B0, 5C0, 5D0	CXA1512-0000-000N0HK20E5
		K4	1290	1461		CXA1512-0000-000N0HK40E5
		M2	1380	1563		CXA1512-0000-000N0HM20E5

Notes:
- Cree maintains a tolerance of ±7% on flux and power measurements, ±0.005 on chromaticity (CCx, CCy) measurements and a tolerance of ±2 on CRI measurements.
- Minimum CRI for high CRI color temperatures 0E5, 40F, 40H, 0E3, 50F, 50H is 80.

* Flux values @ 25 °C are calculated and for reference only.

Copyright © 2012-2013 Cree, Inc. All rights reserved. The information in this document is subject to change without notice. Cree®, the Cree logo and XLamp® are registered trademarks of Cree, Inc.

RELATIVE SPECTRAL POWER DISTRIBUTION (I_F = 350 mA, T_J = 85 °C)

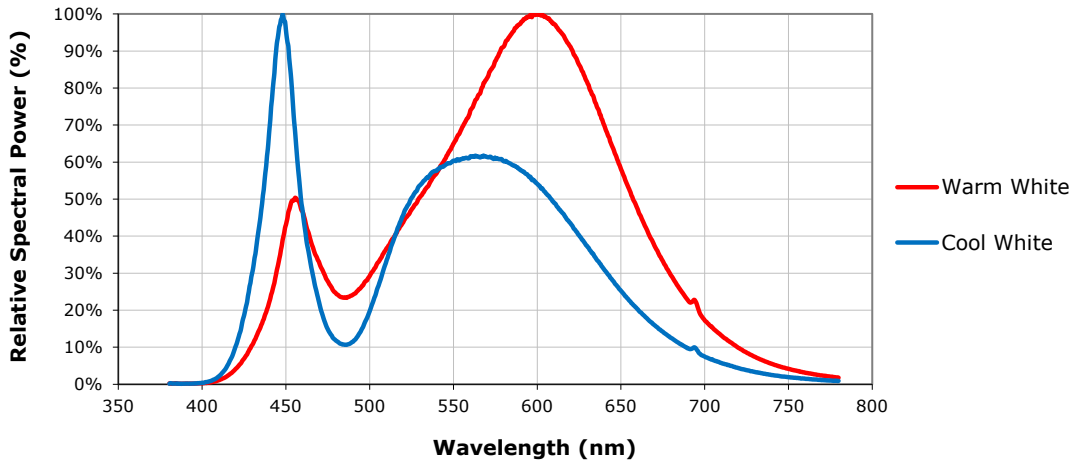

RELATIVE LUMINOUS FLUX VS. JUNCTION TEMPERATURE (I_F = 350 mA)

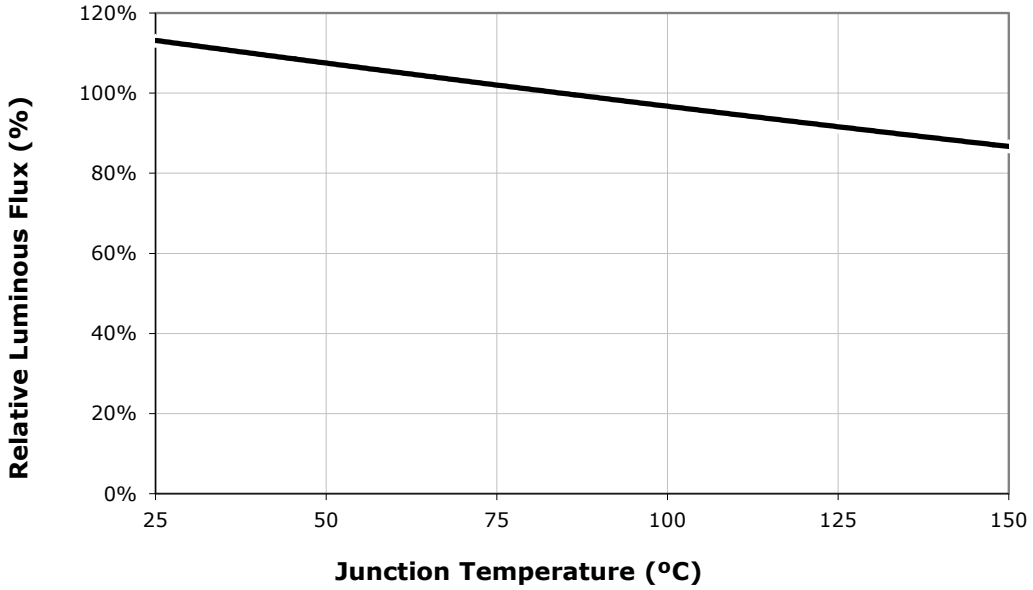

Copyright © 2012-2013 Cree, Inc. All rights reserved. The information in this document is subject to change without notice. Cree®, the Cree logo and XLamp® are registered trademarks of Cree, Inc.

ELECTRICAL CHARACTERISTICS (T_J = 85 °C)

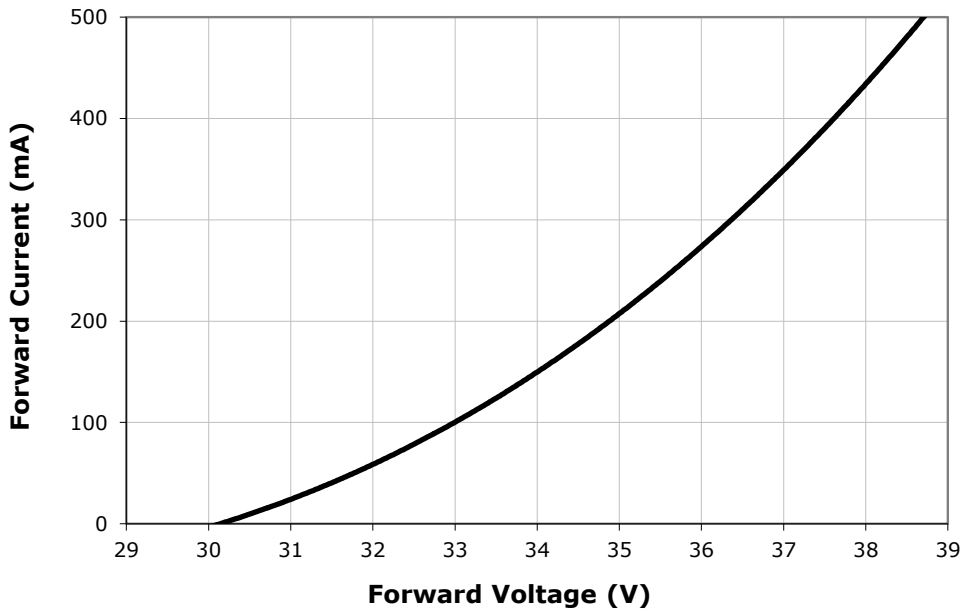

RELATIVE LUMINOUS FLUX VS. CURRENT (T_J = 85 °C)

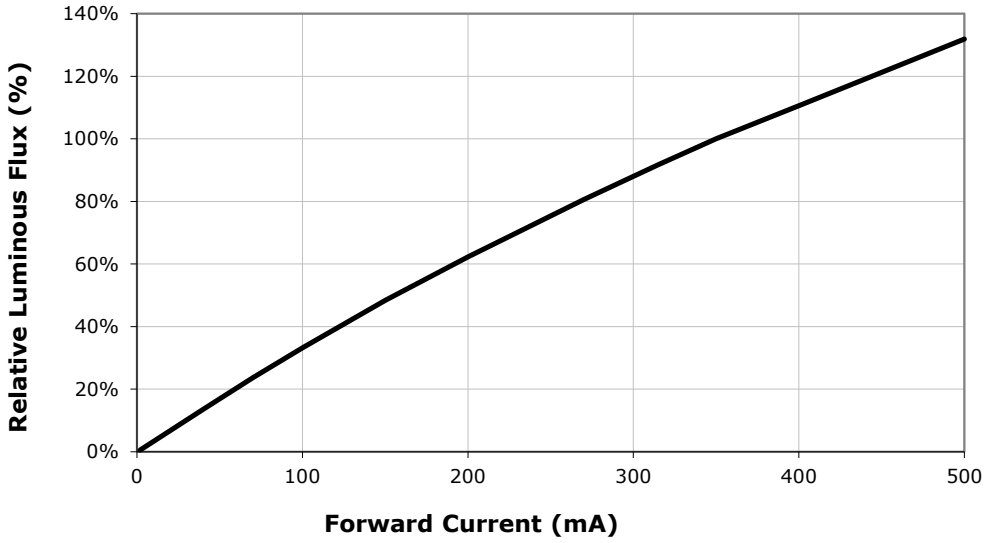

Copyright © 2012-2013 Cree, Inc. All rights reserved. The information in this document is subject to change without notice. Cree®, the Cree logo and XLamp® are registered trademarks of Cree, Inc.

RELATIVE CHROMATICITY VS. CURRENT AND TEMPERATURE (3000K, 80 CRI)

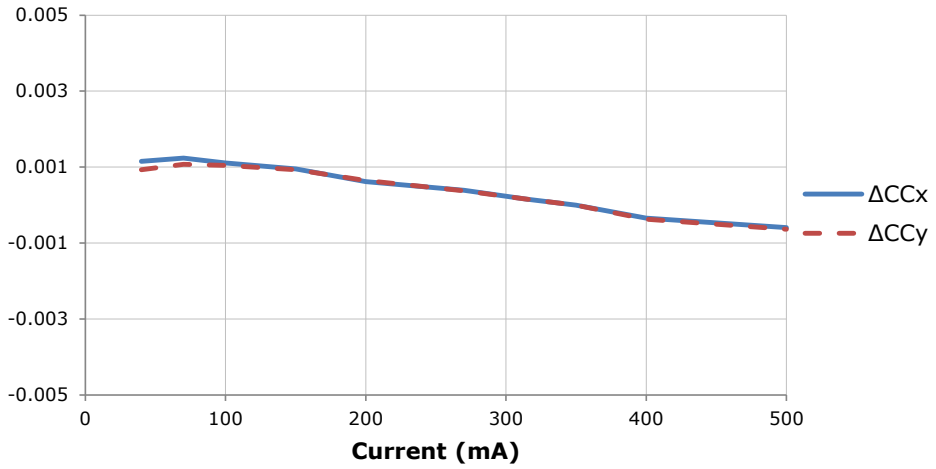

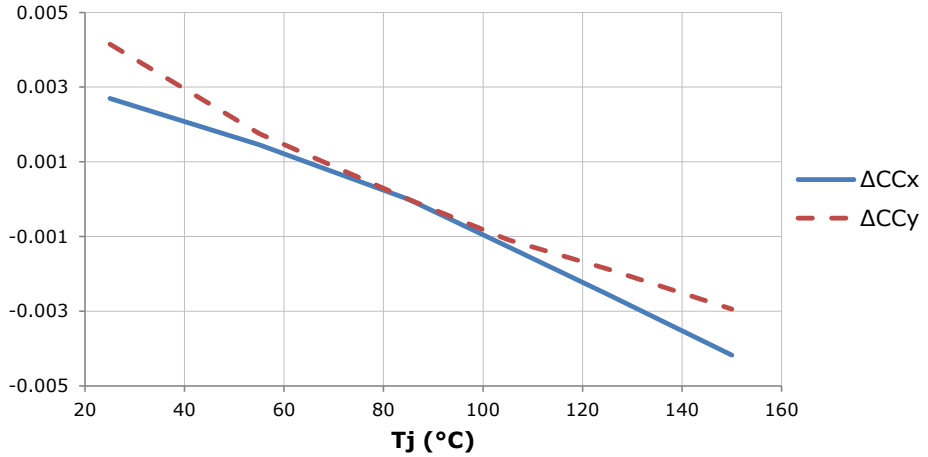

Copyright © 2012-2013 Cree, Inc. All rights reserved. The information in this document is subject to change without notice. Cree®, the Cree logo and XLamp® are registered trademarks of Cree, Inc.

TYPICAL SPATIAL DISTRIBUTION

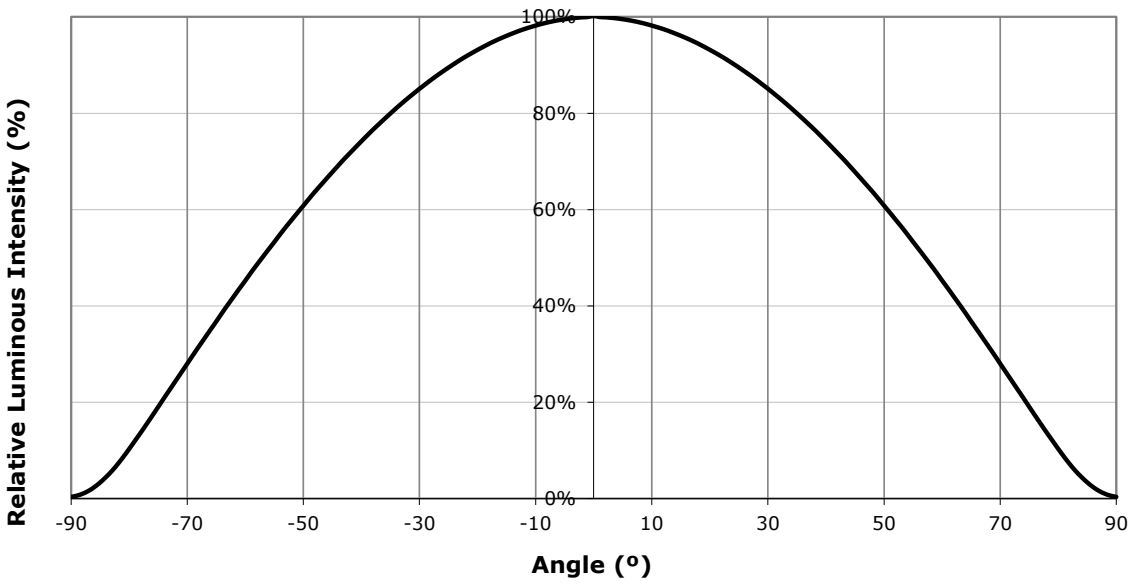

PERFORMANCE GROUPS - BRIGHTNESS (I_F = 350 mA, T_J = 85 °C)

XLamp CXA1512 LEDs are tested for luminous flux and placed into one of the following bins.

Group Code	Min. Luminous Flux @ 350 mA	Max. Luminous Flux @ 350 mA
G4	840	900
H2	900	970
H4	970	1040
J2	1040	1120
J4	1120	1200
K2	1200	1290
K4	1290	1380
M2	1380	1485
M4	1485	1590

Copyright © 2012-2013 Cree, Inc. All rights reserved. The information in this document is subject to change without notice. Cree®, the Cree logo and XLamp® are registered trademarks of Cree, Inc.

PERFORMANCE GROUPS - CHROMATICITY (T_J = 85 °C)

XLamp CXA1512 LEDs are tested for chromaticity and placed into one of the regions defined by the following bounding coordinates.

EasyWhite Color Temperatures – 4-Step			
Code	CCT	x	y
50F	5000K	0.3407	0.3459
		0.3415	0.3586
		0.3499	0.3654
		0.3484	0.3521
40F	4000K	0.3744	0.3685
		0.3782	0.3837
		0.3912	0.3917
		0.3863	0.3758
35F	3500K	0.3981	0.3800
		0.4040	0.3966
		0.4186	0.4037
		0.4116	0.3865
30F	3000K	0.4242	0.3919
		0.4322	0.4096
		0.4449	0.4141
		0.4359	0.3960
27F	2700K	0.4475	0.3994
		0.4573	0.4178
		0.4695	0.4207
		0.4589	0.4021

EasyWhite Color Temperatures – 2-Step			
Code	CCT	x	y
50H	5000K	0.3429	0.3507
		0.3434	0.3571
		0.3475	0.3604
		0.3469	0.3539
40H	4000K	0.3784	0.3741
		0.3804	0.3818
		0.3867	0.3857
		0.3844	0.3778
35H	3500K	0.4030	0.3857
		0.4061	0.3941
		0.4132	0.3976
		0.4099	0.3890
30H	3000K	0.4291	0.3973
		0.4333	0.4062
		0.4395	0.4084
		0.4351	0.3994
27H	2700K	0.4528	0.4046
		0.4578	0.4138
		0.4638	0.4152
		0.4586	0.4060

ANSI White Bins				
Code	CCT	Bin Code	x	y
0E3	5000K	3A0	.3371	.3490
			.3451	.3554
			.3440	.3427
			.3366	.3369
		3B0	.3376	.3616
			.3463	.3687
			.3451	.3554
			.3371	.3490
		3C0	.3463	.3687
			.3551	.3760
			.3533	.3620
			.3451	.3554
		3D0	.3451	.3554
			.3533	.3620
			.3515	.3487
			.3440	.3427

ANSI White Bins				
Code	CCT	Bin Code	x	y
0E5	4000K	5A0	.3670	.3578
			.3702	.3722
			.3825	.3798
			.3783	.3646
		5B0	.3702	.3722
			.3736	.3874
			.3869	.3958
			.3825	.3798
		5C0	.3825	.3798
			.3869	.3958
			.4006	.4044
			.3950	.3875
		5D0	.3783	.3646
			.3825	.3798
			.3950	.3875
			.3898	.3716

ANSI White Bins				
Code	CCT	Bin Code	x	y
0E6	3500K	6A0	.3889	.3690
			.3941	.3848
			.4080	.3916
			.4017	.3751
		6B0	.3941	.3848
			.3996	.4015
			.4146	.4089
			.4080	.3916
		6C0	.4080	.3916
			.4146	.4089
			.4299	.4165
			.4221	.3984
		6D0	.4017	.3751
			.4080	.3916
			.4221	.3984
			.4147	.3814

Copyright © 2012-2013 Cree, Inc. All rights reserved. The information in this document is subject to change without notice. Cree®, the Cree logo and XLamp® are registered trademarks of Cree, Inc.

ANSI White Bins				
Code	CCT	Bin Code	x	y
0E7	3000K	7A0	.4147	.3814
			.4221	.3984
			.4342	.4028
			.4259	.3853
		7B0	.4221	.3984
			.4299	.4165
			.4430	.4212
			.4342	.4028
		7C0	.4342	.4028
			.4430	.4212
			.4562	.4260
			.4465	.4071
		7D0	.4259	.3853
			.4342	.4028
			.4465	.4071
			.4373	.3893

ANSI White Bins				
Code	CCT	Bin Code	x	y
0E8	2700K	8A0	.4373	.3893
			.4465	.4071
			.4582	.4099
			.4483	.3919
		8B0	.4465	.4071
			.4562	.4260
			.4687	.4289
			.4582	.4099
		8C0	.4582	.4099
			.4687	.4289
			.4813	.4319
			.4700	.4126
		8D0	.4483	.3919
			.4582	.4099
			.4700	.4126
			.4593	.3944

CREE EASYWHITE BINS PLOTTED ON THE 1931 CIE COLOR SPACE (T_J = 85 °C)

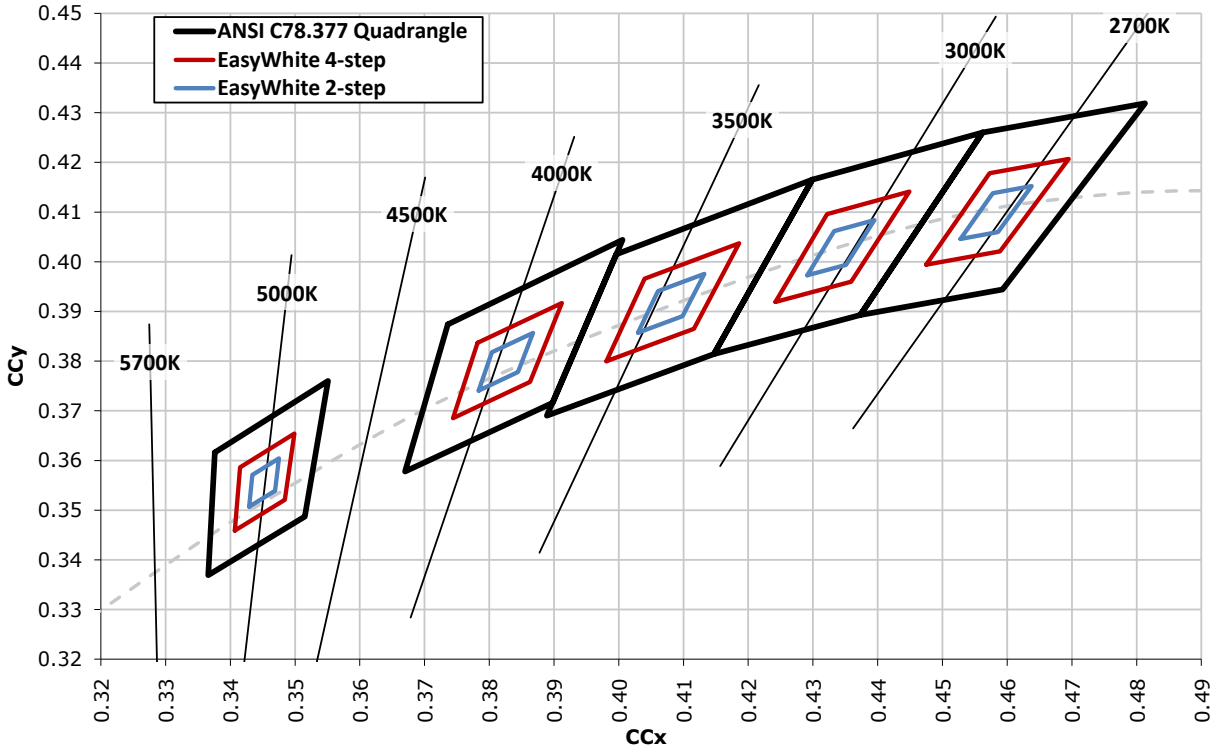

Copyright © 2012-2013 Cree, Inc. All rights reserved. The information in this document is subject to change without notice. Cree®, the Cree logo and XLamp® are registered trademarks of Cree, Inc.

CREE ANSI WHITE BINS PLOTTED ON THE 1931 CIE COLOR SPACE (T_J = 85 °C)

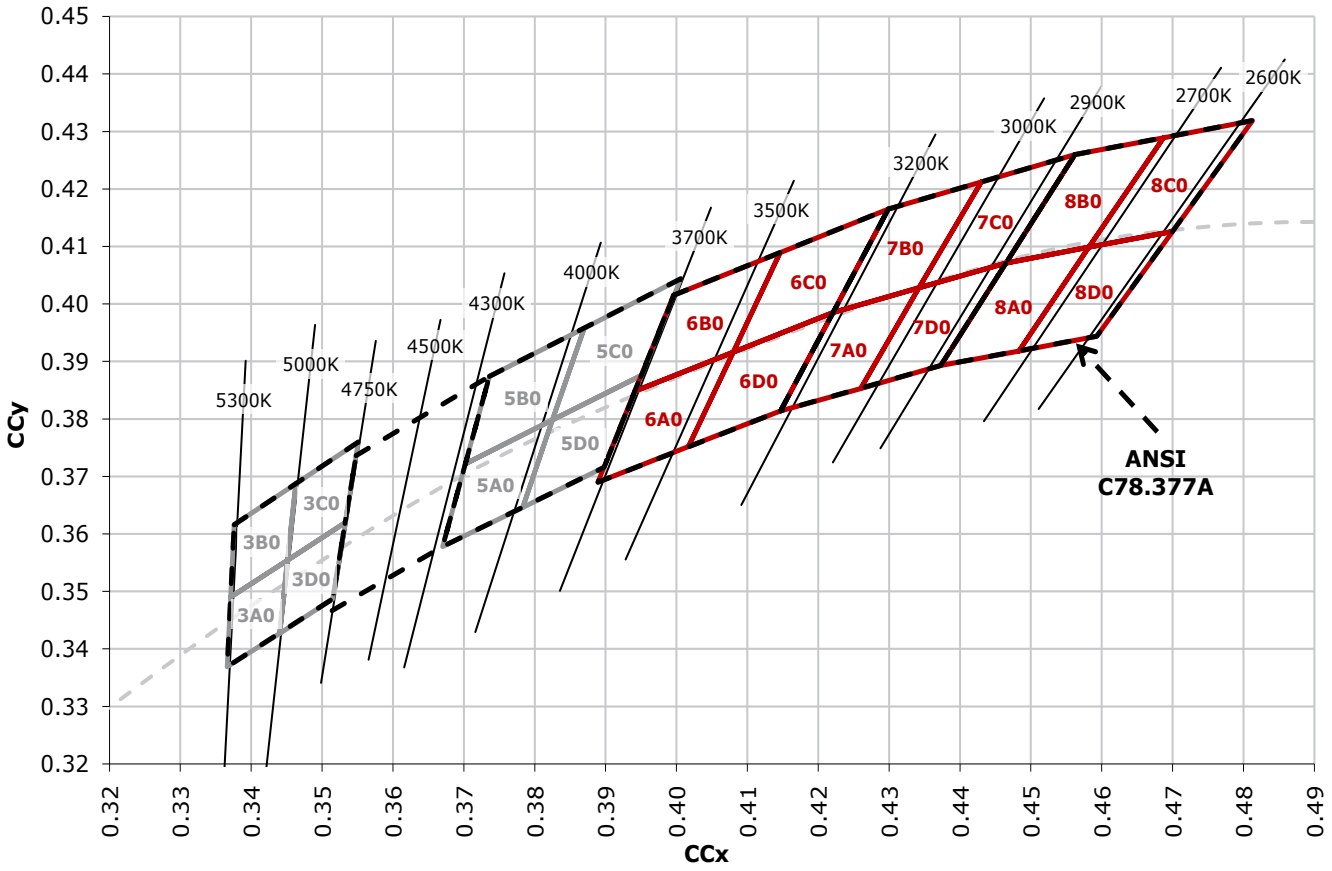

Copyright © 2012-2013 Cree, Inc. All rights reserved. The information in this document is subject to change without notice. Cree®, the Cree logo and XLamp® are registered trademarks of Cree, Inc.

BIN AND ORDER CODE FORMATS

Bin codes and order codes are configured as follows:

Order Code

SSSSSCC-HHHH-HHHGGNNNNNN

- Series = CXA15
- Internal code
- CRI Specification
  - H = 80 min CRI (4000 K & 5000 K)
  - U = 90 min CRI (2700 K & 3000 K)
  - 0 = Standard CRI
- Kit code
- Vf class: N0 = 36-V class
- Performance class

Bin Code

SSSSSCC-WWW-FF-GGR-AAAAA

- Series = CXA15
- Chromaticity bin
- Vf class: N0 = 36-V class
- Internal code
- CRI Specification
  - B = 70 min CRI
  - H = 80 min CRI
  - U = 90 min CRI
- Flux bin
- Performance class

MECHANICAL DIMENSIONS

Dimensions are in mm.
Tolerances unless otherwise specified:
.x ± .10
.xx ± .03
.xxx ± .010
x° ± 1°

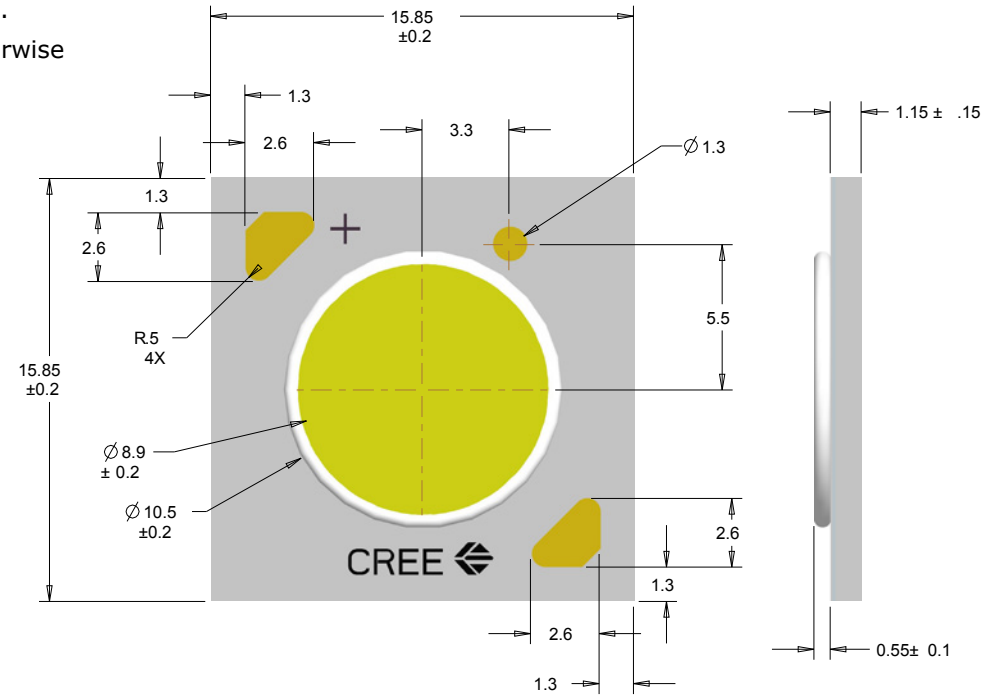

Copyright © 2012-2013 Cree, Inc. All rights reserved. The information in this document is subject to change without notice. Cree®, the Cree logo and XLamp® are registered trademarks of Cree, Inc.

NOTES

Lumen Maintenance Projections

Cree now uses standardized IES LM-80-08 and TM-21-11 methods for collecting long-term data and extrapolating LED lumen maintenance. For information on the specific LM-80 data sets available for this LED, refer to the public LM-80 results document at www.cree.com/xlamp_app_notes/LM80_results.

Please read the XLamp Long-Term Lumen Maintenance application note at www.cree.com/xlamp_app_notes/lumen_maintenance for more details on Cree's lumen maintenance testing and forecasting. Please read the XLamp Thermal Management application note at www.cree.com/xlamp_app_notes/thermal_management for details on how thermal design, ambient temperature, and drive current affect the LED junction temperature.

UL Recognized Component

Level 4 enclosure consideration. The LED package or a portion thereof has been investigated as a fire and electrical enclosure per ANSI/UL 8750.

Vision Advisory Claim

Users should be cautioned not to stare at the light of this LED product. The bright light can damage the eye.

Copyright © 2012-2013 Cree, Inc. All rights reserved. The information in this document is subject to change without notice. Cree®, the Cree logo and XLamp® are registered trademarks of Cree, Inc.

PACKAGING

Cree CXA1512 LEDs are packaged in tubes of 20, which are then combined in boxes of 5 tubes, or 100 LEDs. Boxes of 100 LEDs are of the same performance bin.

Dimensions are in mm.
Tolerances unless otherwise specified:
.x ± .10
.xx ± .03
.xxx ± .010
x° ± 1°

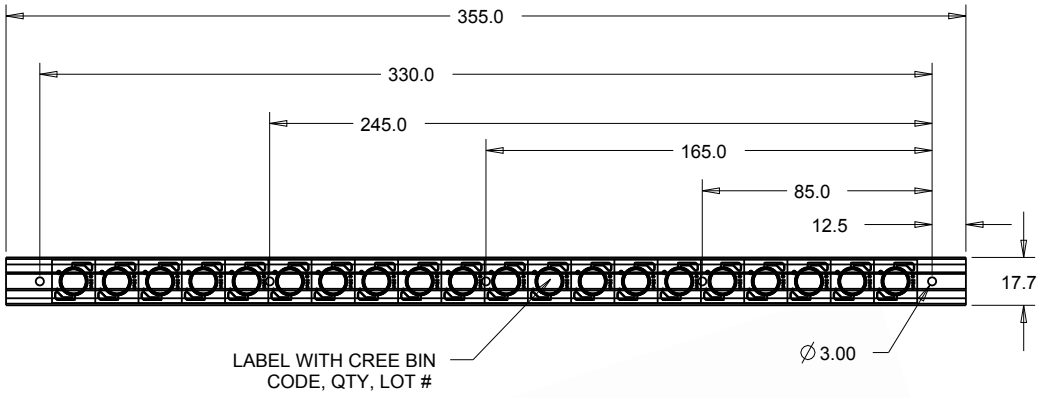

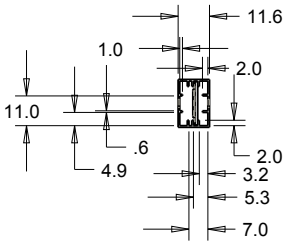

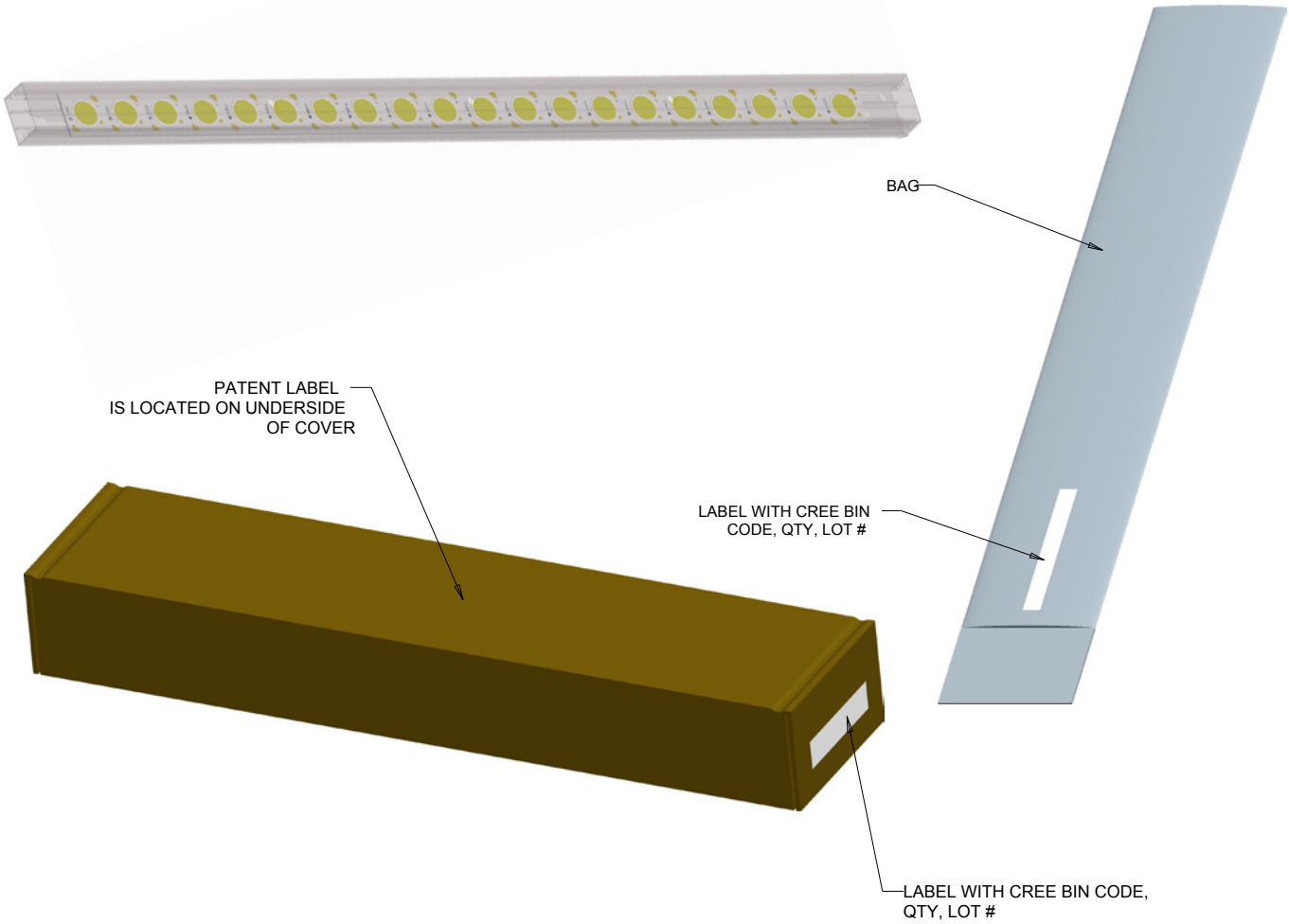

Copyright © 2012-2013 Cree, Inc. All rights reserved. The information in this document is subject to change without notice. Cree®, the Cree logo and XLamp® are registered trademarks of Cree, Inc.

Компания «ЭлектроПласт» предлагает заключение долгосрочных отношений при поставках импортных электронных компонентов на взаимовыгодных условиях!

Наши преимущества:

- Оперативные поставки широкого спектра электронных компонентов отечественного и импортного производства напрямую от производителей и с крупнейших мировых складов;
- Поставка более 17-ти миллионов наименований электронных компонентов;
- Поставка сложных, дефицитных, либо снятых с производства позиций;
- Оперативные сроки поставки под заказ (от 5 рабочих дней);
- Экспресс доставка в любую точку России;
- Техническая поддержка проекта, помощь в подборе аналогов, поставка прототипов;
- Система менеджмента качества сертифицирована по Международному стандарту ISO 9001;
- Лицензия ФСБ на осуществление работ с использованием сведений, составляющих государственную тайну;
- Поставка специализированных компонентов (Xilinx, Altera, Analog Devices, Intersil, Interpoint, Microsemi, Aeroflex, Peregrine, Syfer, Eurofarad, Texas Instrument, Miteq, Cobham, E2V, MA-COM, Hittite, Mini-Circuits,General Dynamics и др.);

Помимо этого, одним из направлений компании «ЭлектроПласт» является направление «Источники питания». Мы предлагаем Вам помощь Конструкторского отдела:

- Подбор оптимального решения, техническое обоснование при выборе компонента;
- Подбор аналогов;
- Консультации по применению компонента;
- Поставка образцов и прототипов;
- Техническая поддержка проекта;
- Защита от снятия компонента с производства.

Как с нами связаться

Телефон: 8 (812) 309 58 32 (многоканальный)
Факс: 8 (812) 320-02-42
Электронная почта: org@eplast1.ru
Адрес: 198099, г. Санкт-Петербург, ул. Калинина, дом 2, корпус 4, литера А.