Inductors for power circuits
Wound metal
SPM-HZ series (for automotive)

RoHS | REACH SVHC-Free | Halogen Free | Lead Free

AEC-Q200

SPM6530-HZ type

Product Portal | Search | Simulation Model | Selection Guide | Tech Library | Tech Note

FEATURES

- Magnetic shield type wound inductor for power circuits using a metallic magnetic material.
- Compared to ferrite wound type inductors, it is possible to achieve large current, low Rdc, and compactness.
- Low inductance variance in high-temperature environments with good DC superimposition characteristics. –40 to 125°C (including self-temperature rise)
- Metallic magnetic material is used, and the structure has an integrated molded coil, so hum noise is lower than with ferrite core adhesive coils.
- Operating temperature range: –40 to +125 °C (including self-temperature rise)
- Compliant with AEC-Q200

APPLICATION

- Automotive-related equipment (Car navigation, car audio, electronic power steering, headlights, other)
- Application guides: Automotive (xEV), Car Infotainment

PART NUMBER CONSTRUCTION

SPM	6530	T	R47	M	HZ
Series name	L×W×H dimensions 7.1×6.5×3.0 mm	Packaging style	Inductance (μH)	Inductance tolerance	Internal code

CHARACTERISTICS SPECIFICATION TABLE

L (μH)	Tolerance	Measuring frequency (kHz)	DC resistance (mΩ)max.	DC resistance (mΩ)typ.	Rated current* Isat (A)typ.	Rated current* Itemp (A)typ.	Part No.
0.47	±20%	100	3.63	3.30	19.7	20.5	SPM6530T-R47M-HZ
0.68	±20%	100	5.39	4.90	16.6	16.0	SPM6530T-R68M-HZ
1.0	±20%	100	7.81	7.10	13.2	14.4	SPM6530T-1R0M-HZ
1.5	±20%	100	10.7	9.70	9.4	11.6	SPM6530T-1R5M-HZ
2.2	±20%	100	19.1	17.3	8.4	8.4	SPM6530T-2R2M-HZ
3.3	±20%	100	29.7	27.0	6.4	6.9	SPM6530T-3R3M-HZ
4.7	±20%	100	39.4	35.8	6.2	5.6	SPM6530T-4R7M-HZ
5.6	±20%	100	41.3	37.5	5.4	5.4	SPM6530T-5R6M-HZ
6.8	±20%	100	60.0	54.5	4.8	4.8	SPM6530T-6R8M-HZ
10.0	±20%	100	86.4	78.5	3.9	4.2	SPM6530T-100M-HZ
15.0	±20%	100	119.9	109.0	3.0	3.3	SPM6530T-150M-HZ
22.0	±20%	100	200.2	182.0	2.3	2.6	SPM6530T-220M-HZ

* Rated current: smaller value of either Isat or Itemp.
Isat: When based on the inductance change rate (20% below the initial value)
Itemp: When based on the temperature increase (temperature increase of 40°C by self heating)

Measurement equipment

Measurement item	Product No.	Manufacturer
L	4284A	Keysight Technologies
DC resistance	AX-111A	ADEX
Rated current Isat	4284A+42841A+42842C	Keysight Technologies

＊ Equivalent measurement equipment may be used.

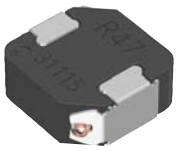

⚠ Please be sure to request delivery specifications that provide further details on the features and specifications of the products for proper and safe use.
Please note that the contents may change without any prior notice due to reasons such as upgrading.

SPM6530-HZ type

L FREQUENCY CHARACTERISTICS

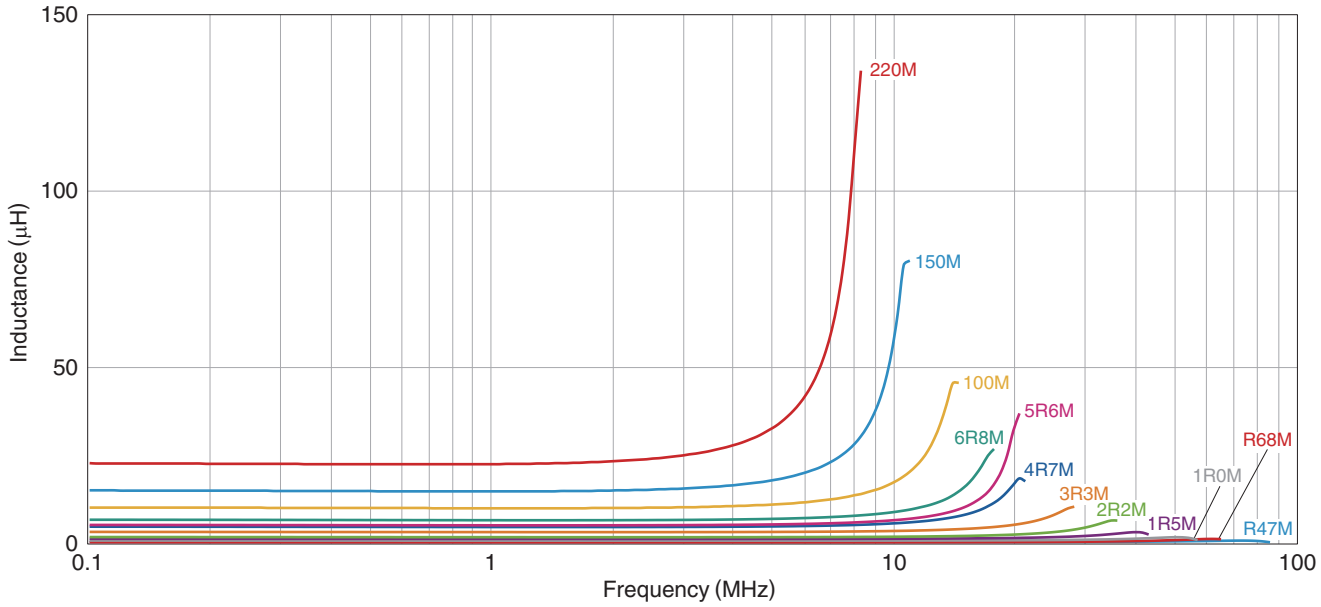

Measurement equipment

Product No.	Manufacturer
4294A	Keysight Technologies

＊ Equivalent measurement equipment may be used.

INDUCTANCE VS. DC BIAS CHARACTERISTICS

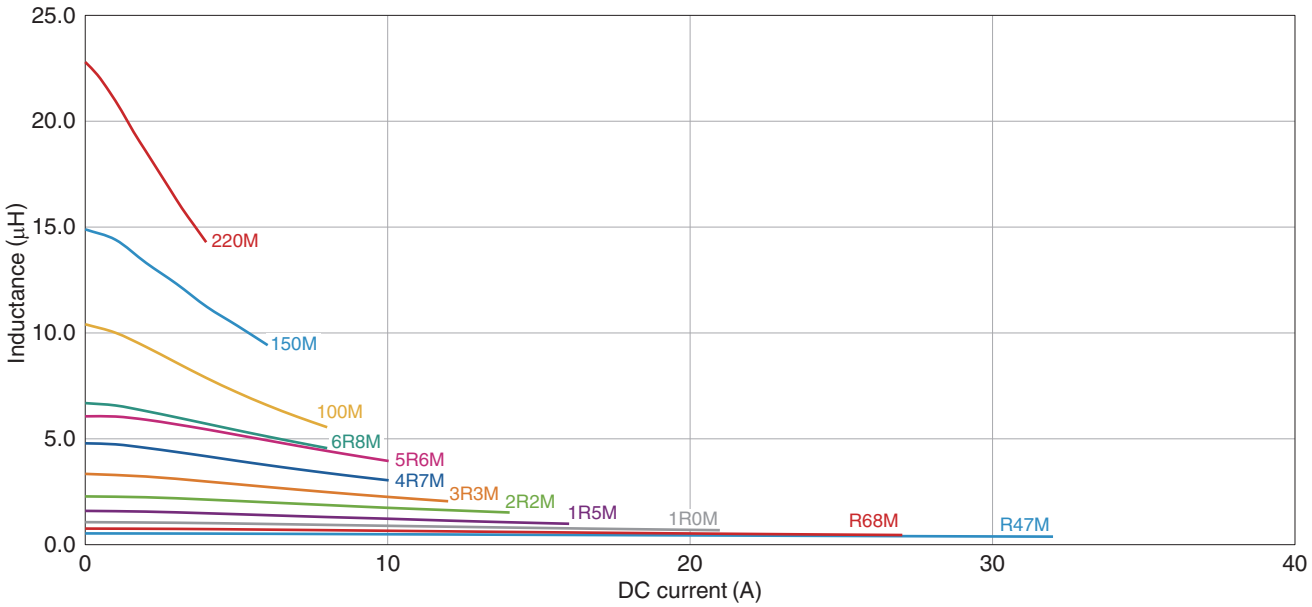

Measurement equipment

Product No.	Manufacturer
4284A+42841A+42842C	Keysight Technologies

＊ Equivalent measurement equipment may be used.

SPM6530-HZ type

SHAPE & DIMENSIONS

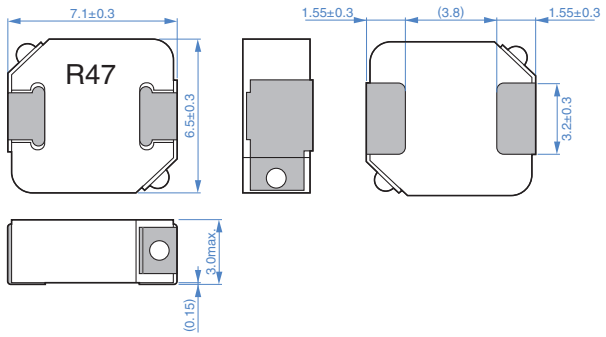

Dimensions in mm

RECOMMENDED LAND PATTERN

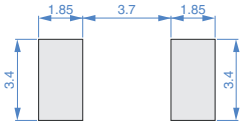

Dimensions in mm

RECOMMENDED REFLOW PROFILE

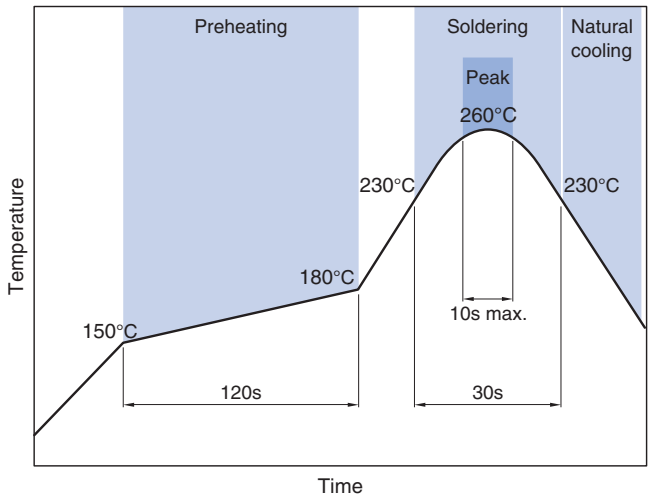

PACKAGING STYLE

REEL DIMENSIONS

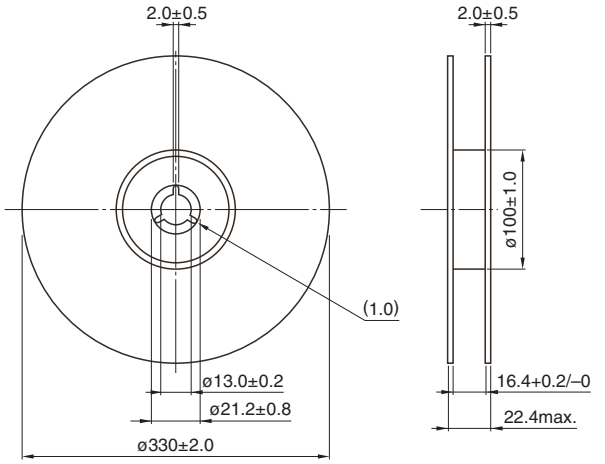

Dimensions in mm

TAPE DIMENSIONS

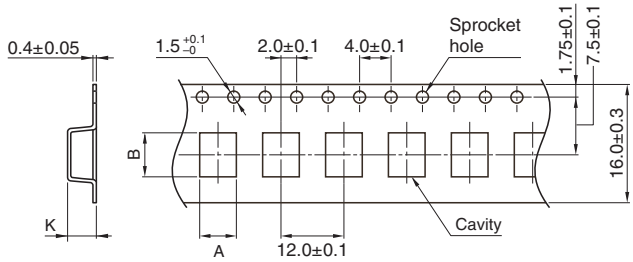

Dimensions in mm

Type	A	B	K
SPM6530-HZ	7.4±0.1	7.6±0.1	3.6±0.1

PACKAGE QUANTITY

Package quantity	1000 pcs/reel

TEMPERATURE RANGE, INDIVIDUAL WEIGHT

Operating temperature range*	Storage temperature range**	Individual weight
–40 to +125 °C	–40 to +125 °C	0.66 g

* Operating temperature range includes self-temperature rise.
** The storage temperature range is for after the assembly.

⚠ Please be sure to request delivery specifications that provide further details on the features and specifications of the products for proper and safe use.
Please note that the contents may change without any prior notice due to reasons such as upgrading.

REMINDERS FOR USING THESE PRODUCTS

Before using these products, be sure to request the delivery specifications.

SAFETY REMINDERS

Please pay sufficient attention to the warnings for safe designing when using this products.

⚠ REMINDERS

- The storage period is within 12 months. Be sure to follow the storage conditions (temperature: 5 to 40°C, humidity: 10 to 75% RH or less).
  If the storage period elapses, the soldering of the terminal electrodes may deteriorate.
- Soldering corrections after mounting should be within the range of the conditions determined in the specifications.
  If overheated, a short circuit, performance deterioration, or lifespan shortening may occur.
- Do not use products that have received any excessive mechanical shock such as by being dropped.
- When embedding a printed circuit board where a chip is mounted to a set, be sure that residual stress is not given to the chip due to the overall distortion of the printed circuit board and partial distortion such as at screw tightening portions.
- Self heating (temperature increase) occurs when the power is turned ON, so the tolerance should be sufficient for the set thermal design.
- Do not expose the products to magnets or magnetic fields.
- The performance of the product may deteriorate if coating materials are used, thus please assess the situation beforehand by taking this factor into consideration.
- Do not use for a purpose outside of the contents regulated in the delivery specifications.
- The products listed on this catalog are intended for use in general electronic equipment (AV equipment, telecommunications equipment, home appliances, amusement equipment, computer equipment, personal equipment, office equipment, measurement equipment, industrial robots) under a normal operation and use condition.
  The products are not designed or warranted to meet the requirements of the applications listed below, whose performance and/or quality require a more stringent level of safety or reliability, or whose failure, malfunction or trouble could cause serious damage to society, person or property.
  If you intend to use the products in the applications listed below or if you have special requirements exceeding the range or conditions set forth in the each catalog, please contact us.

(1) Aerospace/aviation equipment
(2) Transportation equipment (electric trains, ships, etc.)
(3) Medical equipment
(4) Power-generation control equipment
(5) Atomic energy-related equipment
(6) Seabed equipment
(7) Transportation control equipment
(8) Public information-processing equipment
(9) Military equipment
(10) Electric heating apparatus, burning equipment
(11) Disaster prevention/crime prevention equipment
(12) Safety equipment
(13) Other applications that are not considered general-purpose applications

When designing your equipment even for general-purpose applications, you are kindly requested to take into consideration securing protection circuit/device or providing backup circuits in your equipment.

Компания «ЭлектроПласт» предлагает заключение долгосрочных отношений при поставках импортных электронных компонентов на взаимовыгодных условиях!

Наши преимущества:

- Оперативные поставки широкого спектра электронных компонентов отечественного и импортного производства напрямую от производителей и с крупнейших мировых складов;
- Поставка более 17-ти миллионов наименований электронных компонентов;
- Поставка сложных, дефицитных, либо снятых с производства позиций;
- Оперативные сроки поставки под заказ (от 5 рабочих дней);
- Экспресс доставка в любую точку России;
- Техническая поддержка проекта, помощь в подборе аналогов, поставка прототипов;
- Система менеджмента качества сертифицирована по Международному стандарту ISO 9001;
- Лицензия ФСБ на осуществление работ с использованием сведений, составляющих государственную тайну;
- Поставка специализированных компонентов (Xilinx, Altera, Analog Devices, Intersil, Interpoint, Microsemi, Aeroflex, Peregrine, Syfer, Eurofarad, Texas Instrument, Miteq, Cobham, E2V, MA-COM, Hittite, Mini-Circuits,General Dynamics и др.);

Помимо этого, одним из направлений компании «ЭлектроПласт» является направление «Источники питания». Мы предлагаем Вам помощь Конструкторского отдела:

- Подбор оптимального решения, техническое обоснование при выборе компонента;
- Подбор аналогов;
- Консультации по применению компонента;
- Поставка образцов и прототипов;
- Техническая поддержка проекта;
- Защита от снятия компонента с производства.

Как с нами связаться

Телефон: 8 (812) 309 58 32 (многоканальный)
Факс: 8 (812) 320-02-42
Электронная почта: org@eplast1.ru
Адрес: 198099, г. Санкт-Петербург, ул. Калинина, дом 2, корпус 4, литера А.