Product number	DESCRIPTION	NOTES
10110818-XXXXLF	NON-HF	SEE SHT. 3
10110818-XXXXHFLF	HALOGEN FREE (HF)	SEE SHT. 4

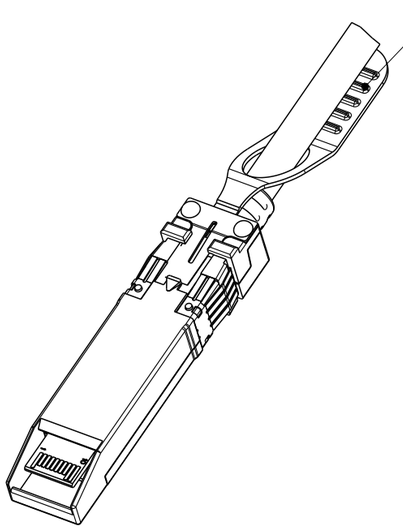

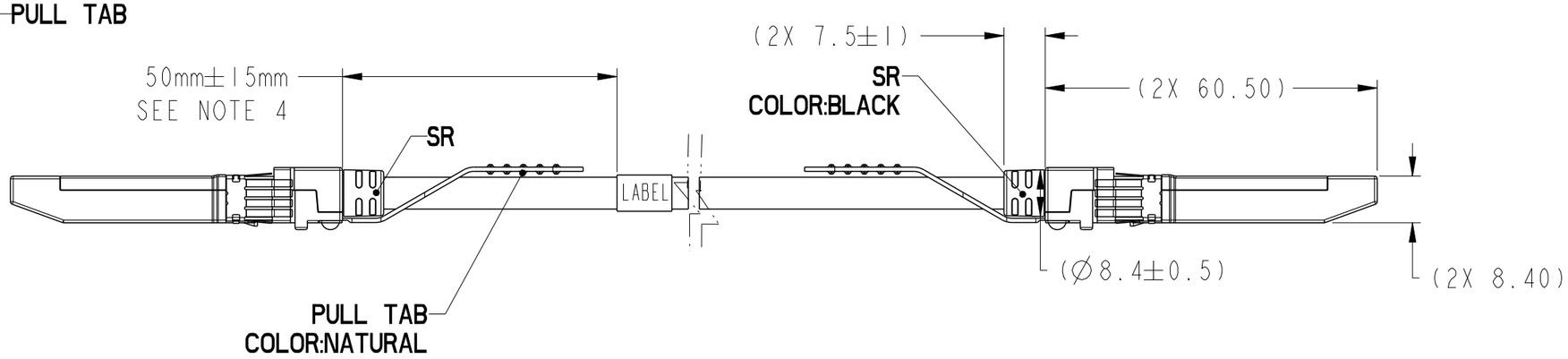

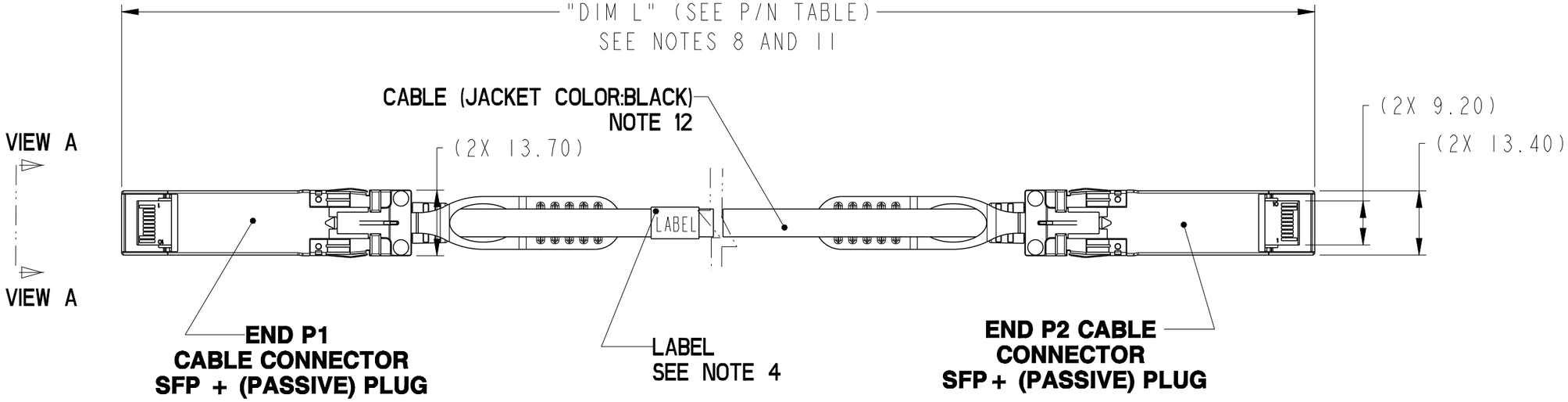

dr	Deborah Ingram	2009/12/18	projection	mm	size A3 / scale 3:10
eng	Michael Zhou	2015/05/13			ecn no ELX-N-20846-1
chr	-	-			
appr	Frank Mao	2015/05/13	product family	SFP+ PLUG	rel level **Released**

FCI	title FINAL ASSEMBLY - STANDARD SFP+ (PASSIVE) ASSEMBLY	dwg no 10110818	rev G
www.fci.com	cat. no. -	Product - Customer Drw	sheet 1 of 5

Copyright FCI.

Product number	DESCRIPTION	NOTES
10110818-XXXXLF	NON-HF	SEE SHT. 3
10110818-XXXXHFLF	HALOGEN FREE (HF)	SEE SHT. 4

WIRING LIST (SEE NOTE 5)				
END P1			END P2	
POSITION	SYMBOL		POSITION	SYMBOL
12	RD-		19	TD-
13	RD+		18	TD+
18	TD+		13	RD+
19	TD-		12	RD-

LOW SPEED SIGNALS P1 & P2	
END P1	
POSITION	SYMBOL
1	VeeT
2	TX_Fault
3	Tx_Disable
4	MOD_DEF(2)
5	MOD_DEF(1)
6	MOD_DEF(0)
7	RateSelect
8	LOS
9	VeeR
10	VeeR
11	VeeR
14	VeeR
15	VccR
16	VccT
17	VeeT
20	VeeT

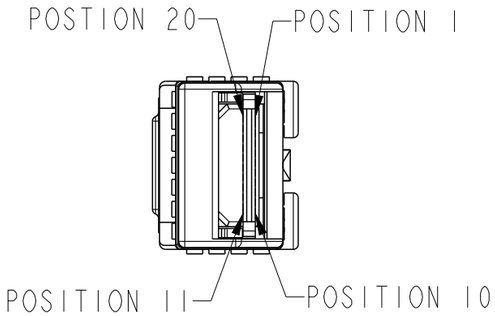

VIEW A (P1)
SCALE 2:1

dr	Deborah Ingram	2009/12/18	projection	mm	size A3 / scale 3:10
eng	Michael Zhou	2015/05/13			ecn no ELX-N-20846-1
chr	-	-			
appr	Frank Mao	2015/05/13	product family	SFP+ PLUG	rel level Released

title	FINAL ASSEMBLY - STANDARD SFP+ (PASSIVE) ASSEMBLY	dwg no 10110818	rev G
www.fci.com	cat. no. -	Product - Customer Drw	sheet 2 of 5

Copyright FCI.

PRODUCT NUMBER	LENGTH (Meters) "DIM L"	AWG	NOTES
10110818-2005LF	0.5	30	NOTE 13
10110818-2010LF	1.0	30	
10110818-2015LF	1.5	30	
10110818-2020LF	2.0	30	
10110818-2025LF	2.5	30	
10110818-2030LF	3.0	30	
10110818-2035LF	3.5	30	
10110818-2040LF	4.0	30	
10110818-3005LF	0.5	28	NOTE 13
10110818-3006LF	0.6	28	
10110818-3010LF	1.0	28	
10110818-3015LF	1.5	28	
10110818-3020LF	2.0	28	
10110818-3025LF	2.5	28	
10110818-3030LF	3.0	28	
10110818-3035LF	3.5	28	
10110818-3040LF	4.0	28	
10110818-3045LF	4.5	28	
10110818-3050LF	5.0	28	
10110818-4005LF	0.5	26	NOTE 13
10110818-4010LF	1.0	26	NOTE 13
10110818-4015LF	1.5	26	NOTE 13
10110818-4020LF	2.0	26	NOTE 13
10110818-4025LF	2.5	26	NOTE 13
10110818-4030LF	3.0	26	NOTE 13
10110818-4035LF	3.5	26	NOTE 13
10110818-4040LF	4.0	26	NOTE 13
10110818-4045LF	4.5	26	NOTE 13
10110818-4050LF	5.0	26	NOTE 13
10110818-4055LF	5.5	26	NOTE 13
10110818-4060LF	6.0	26	NOTE 13
10110818-4065LF	6.5	26	NOTE 10 & 13
10110818-4070LF	7.0	26	NOTE 10 & 13

PRODUCT NUMBER	LENGTH (Meters) "DIM L"	AWG	NOTES
10110818-5005LF	0.5	24	NOTE 13
10110818-5010LF	1.0	24	NOTE 13
10110818-5015LF	1.5	24	NOTE 13
10110818-5020LF	2.0	24	NOTE 13
10110818-5025LF	2.5	24	NOTE 13
10110818-5030LF	3.0	24	NOTE 13
10110818-5035LF	3.5	24	NOTE 13
10110818-5040LF	4.0	24	NOTE 13
10110818-5045LF	4.5	24	NOTE 13
10110818-5050LF	5.0	24	NOTE 13
10110818-5055LF	5.5	24	NOTE 13
10110818-5060LF	6.0	24	NOTE 13
10110818-5065LF	6.5	24	NOTE 13
10110818-5070LF	7.0	24	NOTE 13
10110818-5075LF	7.5	24	NOTE 13
10110818-5080LF	8.0	24	NOTE 10 & 13
10110818-5085LF	8.5	24	NOTE 10 & 13
10110818-5090LF	9.0	24	NOTE 10 & 13
10110818-5095LF	9.5	24	NOTE 10 & 13
10110818-5100LF	10.0	24	NOTE 10 & 13

NON-HALOGEN FREE CABLE ASSEMBLY PART NUMBERS

Copyright FCI.

dr	Deborah Ingram	2009/12/18	projection	mm	size A3 / scale 1:1
eng	Michael Zhou	2015/05/13			ecn no ELX-N-20846-1
chr	-	-			
appr	Frank Mao	2015/05/13	product family	SFP+ PLUG	rel level Released

title: FINAL ASSEMBLY - STANDARD
SFP+ (PASSIVE) ASSEMBLY

dwg no: 10110818 rev: G

www.fci.com | cat. no. - | Product - Customer Drw | sheet 3 of 5

PRODUCT NUMBER	LENGTH (Meters) "DIM L"	AWG	NOTES
10110818-2005HFLF	0.5	30	NOTE 12
10110818-2010HFLF	1.0	30	NOTE 12
10110818-2015HFLF	1.5	30	NOTE 12
10110818-2020HFLF	2.0	30	NOTE 12
10110818-2025HFLF	2.5	30	NOTE 12
10110818-2030HFLF	3.0	30	NOTE 12
10110818-2035HFLF	3.5	30	NOTE 12
10110818-2040HFLF	4.0	30	NOTE 12
10110818-3005HFLF	0.5	28	NOTE 12
10110818-3006HFLF	0.6	28	NOTE 12
10110818-3010HFLF	1.0	28	NOTE 12
10110818-3015HFLF	1.5	28	NOTE 12
10110818-3020HFLF	2.0	28	NOTE 12
10110818-3025HFLF	2.5	28	NOTE 12
10110818-3030HFLF	3.0	28	NOTE 12
10110818-3035HFLF	3.5	28	NOTE 12
10110818-3040HFLF	4.0	28	NOTE 12
10110818-3045HFLF	4.5	28	NOTE 12
10110818-3050HFLF	5.0	28	NOTE 12
10110818-4005HFLF	0.5	26	NOTE 12
10110818-4010HFLF	1.0	26	NOTE 12
10110818-4015HFLF	1.5	26	NOTE 12
10110818-4020HFLF	2.0	26	NOTE 12
10110818-4025HFLF	2.5	26	NOTE 12
10110818-4030HFLF	3.0	26	NOTE 12
10110818-4035HFLF	3.5	26	NOTE 12
10110818-4040HFLF	4.0	26	NOTE 12
10110818-4045HFLF	4.5	26	NOTE 12
10110818-4050HFLF	5.0	26	NOTE 12
10110818-4055HFLF	5.5	26	NOTE 12
10110818-4060HFLF	6.0	26	NOTE 12
10110818-4065HFLF	6.5	26	NOTE 10 & 12
10110818-4070HFLF	7.0	26	NOTE 10 & 12

PRODUCT NUMBER	LENGTH (Meters) "DIM L"	AWG	NOTES
10110818-5005HFLF	0.5	24	NOTE 12
10110818-5010HFLF	1.0	24	NOTE 12
10110818-5015HFLF	1.5	24	NOTE 12
10110818-5020HFLF	2.0	24	NOTE 12
10110818-5025HFLF	2.5	24	NOTE 12
10110818-5030HFLF	3.0	24	NOTE 12
10110818-5035HFLF	3.5	24	NOTE 12
10110818-5040HFLF	4.0	24	NOTE 12
10110818-5045HFLF	4.5	24	NOTE 12
10110818-5050HFLF	5.0	24	NOTE 12
10110818-5055HFLF	5.5	24	NOTE 12
10110818-5060HFLF	6.0	24	NOTE 12
10110818-5065HFLF	6.5	24	NOTE 12
10110818-5070HFLF	7.0	24	NOTE 12
10110818-5075HFLF	7.5	24	NOTE 12
10110818-5080HFLF	8.0	24	NOTE 10 & 12
10110818-5085HFLF	8.5	24	NOTE 10 & 12
10110818-5090HFLF	9.0	24	NOTE 10 & 12
10110818-5095HFLF	9.5	24	NOTE 10 & 12
10110818-5100HFLF	10.0	24	NOTE 10 & 12

HALOGEN FREE CABLE ASSEMBLY PART NUMBERS

Copyright FCI.

dr	Deborah Ingram	2009/12/18	projection	mm	size A3 / scale 3:10
eng	Michael Zhou	2015/05/13			ecn no ELX-N-20846-1
chr	-	-			
appr	Frank Mao	2015/05/13	product family	SFP+ PLUG	rel level Released

title: FINAL ASSEMBLY - STANDARD
SFP+ (PASSIVE) ASSEMBLY

dwg no: 10110818 rev G

www.fci.com | cat. no. - | Product - Customer Drw | sheet 4 of 5

Product number	DESCRIPTION	NOTES
10110818-XXXXLF	NON-HF	SEE SHT. 3
10110818-XXXXHFLF	HALOGEN FREE (HF)	SEE SHT. 4

NOTES:

1 - MATERIAL:
BACKSHELLS: ZINC ALLOY/ COPPER UNDERPLATE/ NICKEL OVERPLATE
PULL TAB: THERMOPLASTIC POLYMER
RELEASE SPRING: STAINLESS STEEL
EMI GASKET: STAINLESS STEEL
SR: THERMOPLASTIC POLYAMIDES
SCREWS: STAINLESS STEEL
PADDLE CARD: PRINTED CIRCUIT SUBSTRATE

2 - THIS PRODUCT MEETS THE RESTRICTION OF HAZARDOUS SUBSTANCES IN ELECTRICAL AND ELECTRONIC EQUIPMENT (RoHS) DIRECTIVE (2011/65/EU)

3 - IMPEDANCE: 100 OHMS DIFFERENTIAL.

4 - UNLESS OTHERWISE SPECIFIED LABEL POSITION IS TO BE 50mm FROM REAR OF CONNECTOR.
LABEL DETAILS:
G
MANUFACTURER CODE OR NAME COUNTRY ORIGIN
FCI P/N
FCI CUSTOMER DRAWING REVISION
FCI SERIAL NUMBER
2D BAR CODE OF SERIAL NUMBER
FONT SHALL BE CLEARLY VISIBLE AND BLACK IN COLOR.

LABEL EXAMPLE →

FCI CHINA
10110818-2005LF
Rev. G
CN1324SA052L0001
||||||||||||||||

FCI SERIAL NUMBER IS ONLY USED FOR TRACKING PRODUCT,DETAIL IS AS BELOW :

CN1324SA052L0001

- CN PRESENT MADE IN CHINA
- YYWW(YEAR AND WEEK)
- PRESENT PRODUCT BASE NUMBER(USE "SA")
- SEQUENCE NUMBER(0001~9999)
- NON-HALOGEN FREE OR HALOGEN FREE(L IS NON-HALOGEN FREE TYPE OR H IS HALOGEN FREE TYPE)
- CABLE AWG(2 IS 30AWG,3 IS 28AWG,4 IS 26AWG,5 IS 24AWG)
- LENGTH(05 IS 0.5 METER,10 IS 1.0 METER,15 IS 1.5 METERS,ETC)

5 - ALL CABLE ASSEMBLIES SHALL BE 100% TESTED FOR CONTINUITY AS DEFINED IN WIRING LIST.

6 - CONFORMS TO FCI PRODUCT SPECIFICATION: GS-12-616.

7 - PACKAGING OF LEAD FREE PRODUCTS MEETS LABELING AND PACKAGING PER SPECIFICATION GS-14-920. PACKAGE CABLE ASSEMBLIES PER GS-14-1272. DUST CAPS ARE TO BE ASSEMBLED PRIOR TO PACKING.

8 - THIS DIMENSION IS A FINISHED PRODUCT LENGTH.

9 - A "△" SYMBOL WILL BE NEXT TO ANY DIMENSION, VIEW, OR NOTE WHICH HAS BEEN MODIFIED WITH THE CURRENT DRAWING REVISION. THE CURRENT REVISION WILL BE SHOWN IN THE SYMBOL.

10 - LONGER LENGTH APPLICATIONS REQUIRE HOST SYSTEM PREMPHASIS AND/OR EQUALIZATION.

11 - UNLESS OTHERWISE SPECIFIED ASSEMBLIED LENGTH TOLERANCE IS TO BE:
<= 1 METER = ±25.0mm
> 1 METER TO 10 METERS = ±2% OF "DIM L"

12 - "HF" PRODUCT NUMBERS DESIGNATE THE USE OF HALOGEN FREE RAW CABLE.

13 - HALOGEN FREE RAW CABLE CAN BE USED AS A SUBSTITUTE ON NON-HF PRODUCT NUMBERS.

14 - EEPROM INFORMATION REFERS TO THE SFF-8472.

15 - RAW CABLE IS OPTIONAL,WHICH HAD BEEN QUALIFIED BY FCI AND MEET THE LATEST FCI SPEC"GS-12-616

dr	Deborah Ingram	2009/12/18	projection	mm	size A3 / scale 3:10
eng	Michael Zhou	2015/05/13			
chr	-	-			ecn no ELX-N-20846-1
appr	Frank Mao	2015/05/13	product family	SFP+ PLUG	rel level Released
title	FINAL ASSEMBLY - STANDARD SFP+ (PASSIVE) ASSEMBLY		dwg no	10110818	rev G
www.fci.com	cat. no. -		Product - Customer Drw		sheet 5 of 5

Copyright FCI.

Компания «ЭлектроПласт» предлагает заключение долгосрочных отношений при поставках импортных электронных компонентов на взаимовыгодных условиях!

Наши преимущества:

- Оперативные поставки широкого спектра электронных компонентов отечественного и импортного производства напрямую от производителей и с крупнейших мировых складов;
- Поставка более 17-ти миллионов наименований электронных компонентов;
- Поставка сложных, дефицитных, либо снятых с производства позиций;
- Оперативные сроки поставки под заказ (от 5 рабочих дней);
- Экспресс доставка в любую точку России;
- Техническая поддержка проекта, помощь в подборе аналогов, поставка прототипов;
- Система менеджмента качества сертифицирована по Международному стандарту ISO 9001;
- Лицензия ФСБ на осуществление работ с использованием сведений, составляющих государственную тайну;
- Поставка специализированных компонентов (Xilinx, Altera, Analog Devices, Intersil, Interpoint, Microsemi, Aeroflex, Peregrine, Syfer, Eurofarad, Texas Instrument, Miteq, Cobham, E2V, MA-COM, Hittite, Mini-Circuits,General Dynamics и др.);

Помимо этого, одним из направлений компании «ЭлектроПласт» является направление «Источники питания». Мы предлагаем Вам помощь Конструкторского отдела:

- Подбор оптимального решения, техническое обоснование при выборе компонента;
- Подбор аналогов;
- Консультации по применению компонента;
- Поставка образцов и прототипов;
- Техническая поддержка проекта;
- Защита от снятия компонента с производства.

Как с нами связаться

Телефон: 8 (812) 309 58 32 (многоканальный)
Факс: 8 (812) 320-02-42
Электронная почта: org@eplast1.ru
Адрес: 198099, г. Санкт-Петербург, ул. Калинина, дом 2, корпус 4, литера А.