Cree® LMH2 850-lm and 1250-lm LED Modules with TrueWhite® Technology

Cree LED modules provide lighting designers and manufacturers with simple, easy-to-adopt LED lighting solutions that reduce luminaire development time and speed time-to-market. The Cree LMH2 850-lm and 1250-lm LED modules are the ideal choice for enabling rapid luminaire development where bright, beautiful, long-life lighting is required. The LMH series of modules incorporates Cree's award-winning TrueWhite LED technology into a system of driver electronics, optics and primary thermal management for use in residential and commercial lighting applications. This versatile LED lighting module jump-starts the design process for recessed downlights, wall sconces or pendant lights in demanding end markets such as retail, museums, hospitality and restaurants.

BENEFITS FOR LUMINAIRE DESIGNERS

- Faster time-to-market and lower system cost with concurrently designed and tested optics, driver electronics, and primary thermal management
- Design flexibility provided by separated light source and power supply with broad selection of mounting and wiring options
- Wide variety of design applications enabled with 2700 K, 3000 K, 3500 K and 4000 K CCT
- Industry-leading 5-year limited system warranty backed by patented, reliable Cree LED technology
- Rapid regulatory approval and voluntary qualification of final luminaire enabled by:
  - UL approval (120 V and 277 V)
  - CE certification (230 V)
  - California Title 24 compliance (120 V and 277 V)
  - LED LM-80 data for US ENERGY STAR

BENEFITS FOR END USERS

- Vibrant color rendering showcases the full beauty of people, rooms, and merchandise with $\geq$ 90 CRI
- Significant energy savings over traditional lighting sources through superior efficacy > 80 lm/W
- Proprietary optics provide a uniform, visually comfortable appearance whether the module is powered on or off
- Designed to last 50,000 hours at L_{70}
- Consistent light quality over time and temperature delivered by built-in optical and thermal management system
- Specification grade dimmability down to 5% of rated light output using standard incandescent and electronic low-voltage dimmers (120 V and 230 V only)
- No UV or mercury

FEATURES

- Industry-leading module efficacy (light source + driver) at 80 lm/W
- 850- and 1250-lumen lighting units, the first members of an extended family of modules
- Optional heat sink

Light Source

120 V & 277 V Driver

230 V Driver

Copyright © 2011-2012 Cree, Inc. All rights reserved. The information in this document is subject to change without notice.
Cree, the Cree logo and TrueWhite are registered trademarks and Cree TrueWhite is a trademark of Cree, Inc.

Cree, Inc.
4600 Silicon Drive
Durham, NC 27703
USA Tel: +1.919.313.5300

CHARACTERISTICS

Cree TrueWhite technology is a revolutionary way of generating white light with LEDs. It delivers high efficacy with beautiful light characteristics and color accuracy, while maintaining color consistency over the life of the product.

LMH2 Light Source

Luminous Flux (lm)[1,2]	CCT (K)	CRI	Average Input Power (W)[1]	Module Efficacy (lm/W)[3]	Order Code
850	4000	≥ 90	10.5	80	LMH020-0850-40G9-00000TW
	3500	≥ 90	10.5	80	LMH020-0850-35G9-00000TW
	3000	≥ 90	10.5	80	LMH020-0850-30G9-00000TW
	2700	≥ 90	10.5	80	LMH020-0850-27G9-00000TW
1250	4000	≥ 90	15.5	80	LMH020-1250-40G9-00000TW
	3500	≥ 90	15.5	80	LMH020-1250-35G9-00000TW
	3000	≥ 90	15.5	80	LMH020-1250-30G9-00000TW
	2700	≥ 90	15.5	80	LMH020-1250-27G9-00000TW

LMD125 Driver

Max. Rated Input Power (W)[1]	Input Voltage (V)[1]	Frequency (Hz)	Power Factor		Dimming	Order Code
			850 lm	1250 lm		
18	120	60	.97	.99	TRIAC	LMD125-0018-C440-1010000
17	277	60	.92	.98	N/A	LMD125-0017-C440-3000000
18	230	50/60	.90	.95	TRIAC	LMD125-0018-C440-2010000

1. ±10% variance
2. Measured at steady state, T_C = 55 °C
3. Includes LMD125 driver losses

The operating temperature at the case temperature (Tc) point is 0-70 °C.

CHROMATICITY

The Cree LMH2 LED module provides high color consistency within a 3-step MacAdams ellipse around the specified color temperature. Individual LEDs are tested and matched to meet our designed chromaticity specification.

Secondary optics can be added to the module but will reduce light output and may also alter the color characteristics of the final luminaire design.

THERMAL MANAGEMENT GUIDELINES

The Cree LMH2 LED module is designed to perform in a variety of environments without the need for active cooling. To achieve lifetime and performance estimates, and to maintain the warranty, the final luminaire design cannot allow the Tc point shown on page one to exceed 70 °C for the light source or power supply when the luminaire is at thermal equilibrium. Follow the mechanical and thermal design guidelines listed in the "Cree LMH2 LED Module Design Guide" to ensure proper thermal management. An optional heat sink is available.

Note: The heat sink is designed to work with all LMH2 lumen levels.

Optional Heat Sink Order Code
LMH020-HS00-0000-0000001

PHOTOMETRY

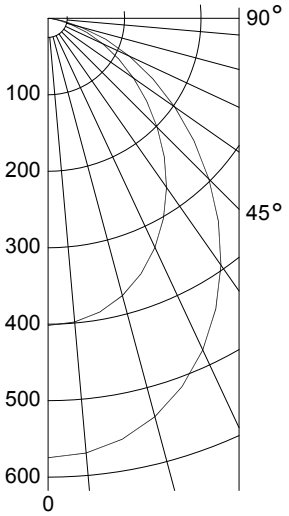

Intensity (Candlepower)

Angle	850	1250
0°	402	575
5°	399	571
15°	375	539
25°	331	479
35°	270	394
45°	202	297
55°	136	202
65°	79	118
75°	30	45
85°	3	5
90°	0	0

Zonal Lumens - 850

Zone	Lumens	%
0-30°	295	34
0-40°	464	54
0-60°	742	87
0-90°	858	100
0-180°	858	100

Zonal Lumens - 1250

Zone	Lumens	%
0-30°	426	34
0-40°	672	54
0-60°	1082	86
0-90°	1256	100
0-180°	1256	100

Copyright © 2011-2012 Cree, Inc. All rights reserved. The information in this document is subject to change without notice. Cree, the Cree logo and TrueWhite are registered trademarks and Cree TrueWhite is a trademark of Cree, Inc.

MECHANICAL DESIGN

Light Source

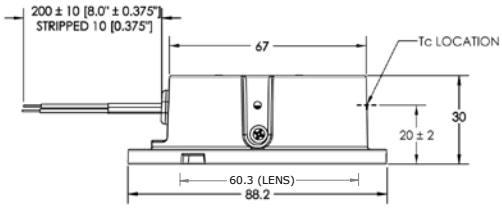

120 V & 277 V Driver

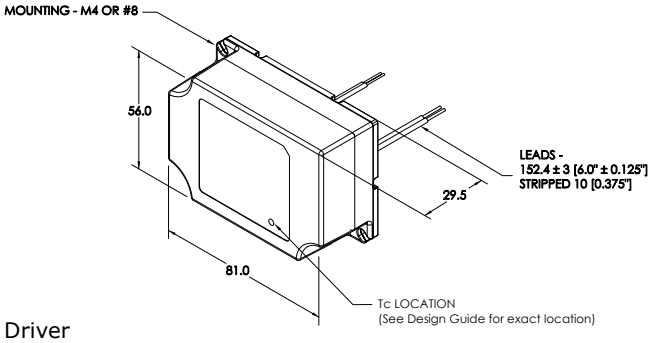

Optional Heat Sink

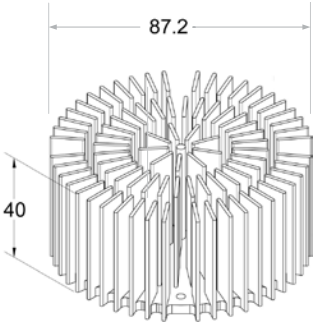

230 V Driver

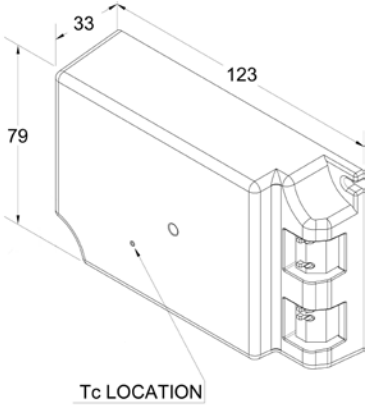

units: mm

Copyright © 2011-2012 Cree, Inc. All rights reserved. The information in this document is subject to change without notice. Cree, the Cree logo and TrueWhite are registered trademarks and Cree TrueWhite is a trademark of Cree, Inc.

Компания «ЭлектроПласт» предлагает заключение долгосрочных отношений при поставках импортных электронных компонентов на взаимовыгодных условиях!

Наши преимущества:

- Оперативные поставки широкого спектра электронных компонентов отечественного и импортного производства напрямую от производителей и с крупнейших мировых складов;
- Поставка более 17-ти миллионов наименований электронных компонентов;
- Поставка сложных, дефицитных, либо снятых с производства позиций;
- Оперативные сроки поставки под заказ (от 5 рабочих дней);
- Экспресс доставка в любую точку России;
- Техническая поддержка проекта, помощь в подборе аналогов, поставка прототипов;
- Система менеджмента качества сертифицирована по Международному стандарту ISO 9001;
- Лицензия ФСБ на осуществление работ с использованием сведений, составляющих государственную тайну;
- Поставка специализированных компонентов (Xilinx, Altera, Analog Devices, Intersil, Interpoint, Microsemi, Aeroflex, Peregrine, Syfer, Eurofarad, Texas Instrument, Miteq, Cobham, E2V, MA-COM, Hittite, Mini-Circuits,General Dynamics и др.);

Помимо этого, одним из направлений компании «ЭлектроПласт» является направление «Источники питания». Мы предлагаем Вам помощь Конструкторского отдела:

- Подбор оптимального решения, техническое обоснование при выборе компонента;
- Подбор аналогов;
- Консультации по применению компонента;
- Поставка образцов и прототипов;
- Техническая поддержка проекта;
- Защита от снятия компонента с производства.

Как с нами связаться

Телефон: 8 (812) 309 58 32 (многоканальный)
Факс: 8 (812) 320-02-42
Электронная почта: org@eplast1.ru
Адрес: 198099, г. Санкт-Петербург, ул. Калинина, дом 2, корпус 4, литера А.