100 mA POSITIVE VOLTAGE REGULATORS

- **Wide range of Fixed Output Voltages**
- **Output Current up to 100 mA**
- **No External Components Required**
- **Internal Thermal Overload Protection**
- **Internal Short Circuit Current-Limiting**
- **Available in TO-92, SOT-89 and SOP-8 packages**

The GM78L00 series of positive voltage regulators are low-cost devices providing a simple solution for a wide variety of applications requiring a regulated supply of up to 100mA.
These virtually indestructible positive voltage regulators are protected by thermal shutdown and internal current-limiting. Most applications require no external components.
The GM78L00's are very versatile. Use them as fixed voltage regulators in a wide range of applications, including local on-card regulation for elimination of noise and distribution problems associated with single-point regulation. They can also be used with power pass elements to make high current voltage regulators.
The GM78L00's offer impressive performance advantages over old-fashioned zener diode-resistor combinations, providing lower output impedance and reduced quiescent current, along with lower noise.

PIN CONFIGURATIONS

TO-92 (TOP VIEW)

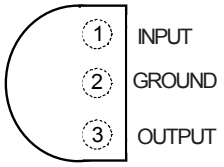

SOT-89 (Top View)

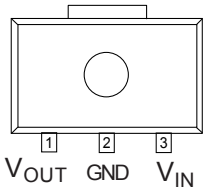

SOP-8 (TOP VIEW)

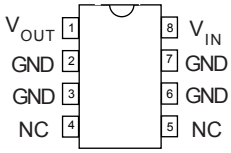

REPRESENTATIVE BLOCK DIAGRAM

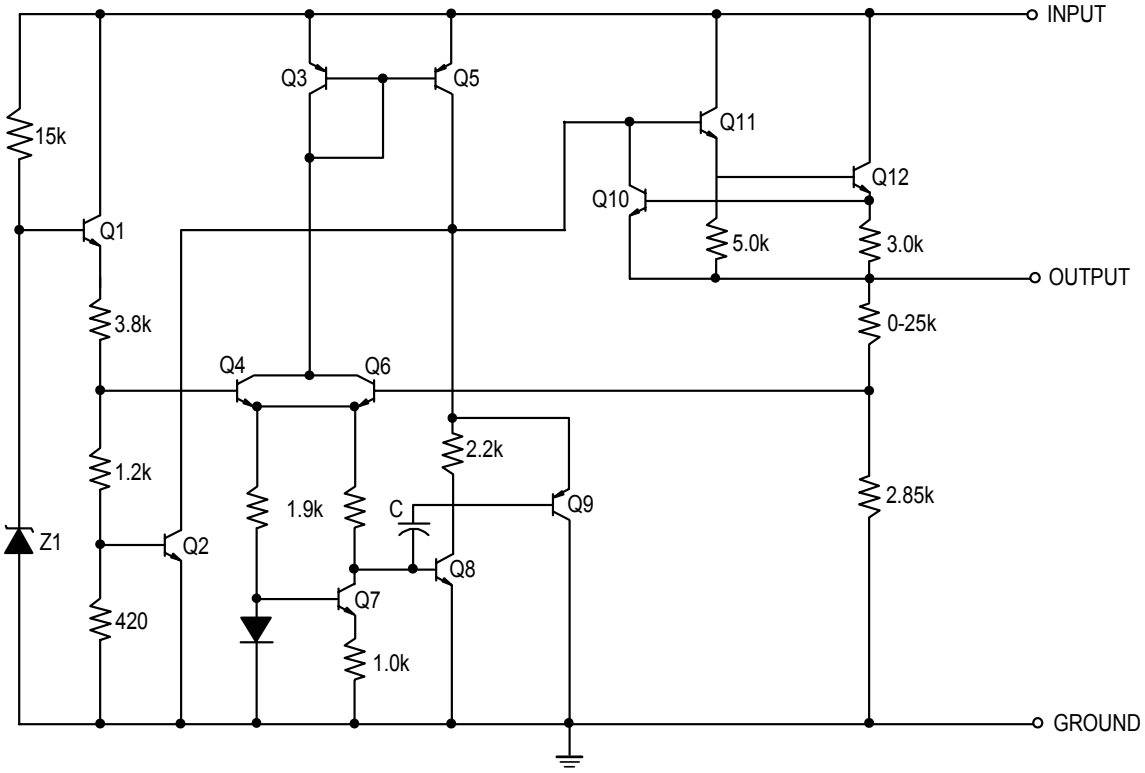

■ ELECTRICAL CHARACTERISTICS GM78L05

T_A = 0°C to 125º C, V_I=10V, I_O=40mA, C_I=0.33µF, unless otherwise specified (Note 1)

CHARACTERISTICS	SYMBOL	TEST CONDITIONS	MIN	TYP	MAX	UNIT
Output Voltage	V_O	T_J=25°C	4.8	5.0	5.2	V
Line Regulation	$V_{R\ LINE}$	T_J=25°C, 7V ≤ V_I ≤ 20V		32	150	mV
		T_J=25°C, 8V ≤ V_I ≤ 20V		26	100	
Load Regulation	$V_{R\ LOAD}$	T_J=25°C, 1mA ≤ I_O ≤ 100mA		11	60	mV
		T_J=25°C, 1mA ≤ I_O ≤ 40mA		5	30	
Output Voltage (Note 2)	V_O	7V ≤ V_I ≤ 20V, 1mA ≤ I_O ≤ 40mA	4.75	5	5.25	V
		7V ≤ V_I ≤ V_{MAX}, 1mA ≤ I_O ≤ 70mA	4.75	5	5.25	
Quiscent Current	I_Q	T_J=25°C		3.8	6.0	mA
Quiscent Current Change	ΔI_Q	(with Line) 8V ≤ V_I ≤ 20V			1.5	mA
		(with Load) 1mA ≤ I_O ≤ 40mA			0.1	
Noise	N_O	T_A=25°C, 10Hz ≤ f ≤ 100kHz		42		µV
Ripple Rejection	$\Delta V_I / \Delta V_O$	T_J=25°C, f=120kHz, 8V ≤ V_I ≤ 18V	41	49		dB
Dropout Voltage	V_{DO}	T_J=25°C		1.7		V

Note 1: The maximum steady state usable output current and input voltage are very dependent on the heat sinking and/or lead length of the package. The data above represent pulse test conditions with junction temperatures as indicated at the initiation of tests.
Note 2: Power Dissipation ≤ 0.75W.

■ ELECTRICAL CHARACTERISTICS GM78L06

T_A = 0°C to 125º C, V_I=11V, I_O=40mA, C_I=0.33µF, C_O=0.1µF, unless otherwise specified (Note 1)

CHARACTERISTICS	SYMBOL	TEST CONDITIONS	MIN	TYP	MAX	UNIT
Output Voltage	V_O	T_J=25°C	5.75	6.0	6.25	V
Line Regulation	$V_{R\ LINE}$	T_J=25°C, 8.0V ≤ V_I ≤ 20V		35	175	mV
		T_J=25°C, 9.0V ≤ V_I ≤ 20V		29	125	
Load Regulation	$V_{R\ LOAD}$	T_J=25°C, 1mA ≤ I_O ≤ 100mA		16	80	mV
		T_J=25°C, 1mA ≤ I_O ≤ 40mA		9	40	
Output Voltage (Note 2)	V_O	8V ≤ V_I ≤ 20V, 1mA ≤ I_O ≤ 40mA	5.7	6	6.3	V
		8V ≤ V_I ≤ V_{MAX}, 1mA ≤ I_O ≤ 70mA	5.7	6	6.3	
Quiscent Current	I_Q	T_J=25°C		3.9	6.0	mA
Quiscent Current Change	ΔI_Q	(with Line) 9V ≤ V_I ≤ 20V			1.5	mA
		(with Load) 1mA ≤ I_O ≤ 40mA			0.1	
Noise	N_O	T_A=25°C, 10Hz ≤ f ≤ 100kHz		46		µV
Ripple Rejection	$\Delta V_I / \Delta V_O$	T_J=25°C, f=120kHz, 9V ≤ V_I ≤ 19V	40	48		dB
Dropout Voltage	V_{DO}	T_J=25°C		1.7		V

Note 1: The maximum steady state usable output current and input voltage are very dependent on the heat sinking and/or lead length of the package. The data above represent pulse test conditions with junction temperatures as indicated at the initiation of tests.
Note 2: Power Dissipation ≤ 0.75W.

■ ELECTRICAL CHARACTERISTICS GM78L08

T_A = 0°C to 125º C, V_I=14V, I_O=40mA, C_I=0.33µF, C_O=0.1µF, unless otherwise specified (Note 1)

CHARACTERISTICS	SYMBOL	TEST CONDITIONS	MIN	TYP	MAX	UNIT
Output Voltage	V_O	T_J=25°C	7.7	8.0	8.3	V
Line Regulation	$V_{R\ LINE}$	T_J=25°C, 11V ≤ V_I ≤ 23V		42	175	mV
		T_J=25°C, 12V ≤ V_I ≤ 23V		36	125	
Load Regulation	$V_{R\ LOAD}$	T_J=25°C, 1mA ≤ I_O ≤ 100mA		18	80	mV
		T_J=25°C, 1mA ≤ I_O ≤ 40mA		10	40	
Output Voltage (Note 2)	V_O	11V ≤ V_I ≤ 23V, 1mA ≤ I_O ≤ 40mA	7.6	8	8.4	V
		11V ≤ V_I ≤ V_{MAX}, 1mA ≤ I_O ≤ 70mA	7.6	8	8.4	
Quiscent Current	I_Q	T_J=25°C		4	6	mA
Quiscent Current Change	ΔI_Q	(with Line) 12V ≤ V_I ≤ 23V			1.5	mA
		(with Load) 1mA ≤ I_O ≤ 40mA			0.1	
Noise	N_O	T_A=25°C, 10Hz ≤ f ≤ 100kHz		54		µV
Ripple Rejection	$\Delta V_I / \Delta V_O$	T_J=25°C, f=120kHz, 12V ≤ V_I ≤ 22V	37	46		dB
Dropout Voltage	V_{DO}	T_J=25°C		1.7		V

Note 1: The maximum steady state usable output current and input voltage are very dependent on the heat sinking and/or lead length of the package. The data above represent pulse test conditions with junction temperatures as indicated at the initiation of tests.
Note 2: Power Dissipation ≤ 0.75W.

■ ELECTRICAL CHARACTERISTICS GM78L09

T_A = 0°C to 125º C, V_I=16V, I_O=40mA, C_I=0.33µF, C_O=0.1µF, unless otherwise specified (Note 1)

CHARACTERISTICS	SYMBOL	TEST CONDITIONS	MIN	TYP	MAX	UNIT
Output Voltage	V_O	T_J=25°C	8.6	9.0	9.4	V
Line Regulation	$V_{R\ LINE}$	T_J=25°C, 12V ≤ V_I ≤ 24V		45	175	mV
		T_J=25°C, 13V ≤ V_I ≤ 24V		40	125	
Load Regulation	$V_{R\ LOAD}$	T_J=25°C, 1mA ≤ I_O ≤ 100mA		19	90	mV
		T_J=25°C, 1mA ≤ I_O ≤ 40mA		11	40	
Output Voltage (Note 2)	V_O	12V ≤ V_I ≤ 24V, 1mA ≤ I_O ≤ 40mA	8.55	9.0	9.45	V
		12V ≤ V_I ≤ V_{MAX}, 1mA ≤ I_O ≤ 70mA	8.55	9.0	9.45	
Quiscent Current	I_Q	T_J=25°C		4.1	6.0	mA
Quiscent Current Change	ΔI_Q	(with Line) 13V ≤ V_I ≤ 24V			1.5	mA
		(with Load) 1mA ≤ I_O ≤ 40mA			0.1	
Noise	N_O	T_A=25°C, 10Hz ≤ f ≤ 100kHz		58		µV
Ripple Rejection	$\Delta V_I / \Delta V_O$	T_J=25°C, f=120kHz, 15V ≤ V_I ≤ 25V	38	45		dB
Dropout Voltage	V_{DO}	T_J=25°C		1.7		V

Note 1: The maximum steady state usable output current and input voltage are very dependent on the heat sinking and/or lead length of the package. The data above represent pulse test conditions with junction temperatures as indicated at the initiation of tests.
Note 2: Power Dissipation ≤ 0.75W.

■ ELECTRICAL CHARACTERISTICS GM78L10

T_A = 0°C to 125º C, V_I=17V, I_O=40mA, C_I=0.33µF, C_O=0.1µF, unless otherwise specified (Note 1)

CHARACTERISTICS	SYMBOL	TEST CONDITIONS	MIN	TYP	MAX	UNIT
Output Voltage	V_O	T_J=25°C	9.6	10	10.4	V
Line Regulation	$V_{R\ LINE}$	T_J=25°C, 13V ≤ V_I ≤ 24V		51	175	mV
		T_J=25°C, 14V ≤ V_I ≤ 24V		42	125	
Load Regulation	$V_{R\ LOAD}$	T_J=25°C, 1mA ≤ I_O ≤ 100mA		22	100	mV
		T_J=25°C, 1mA ≤ I_O ≤ 40mA		13	50	
Output Voltage (Note 2)	V_O	13V ≤ V_I ≤ 24V, 1mA ≤ I_O ≤ 40mA	9.5	10	10.5	V
		13V ≤ V_I ≤ V_{MAX}, 1mA ≤ I_O ≤ 70mA	9.5	10	10.5	
Quiscent Current	I_Q	T_J=25°C		4.3	6.5	mA
Quiscent Current Change	ΔI_Q	(with Line) 14V ≤ V_I ≤ 24V			1.5	mA
		(with Load) 1mA ≤ I_O ≤ 40mA			0.1	
Noise	N_O	T_A=25°C, 10Hz ≤ f ≤ 100kHz		62		µV
Ripple Rejection	$\Delta V_I / \Delta V_O$	T_J=25°C, f=120kHz, 16V ≤ V_I ≤ 27V	37	44		dB
Dropout Voltage	V_{DO}	T_J=25°C		1.7		V

Note 1: The maximum steady state usable output current and input voltage are very dependent on the heat sinking and/or lead length of the package. The data above represent pulse test conditions with junction temperatures as indicated at the initiation of tests.
Note 2: Power Dissipation ≤ 0.75W.

■ ELECTRICAL CHARACTERISTICS GM78L12

T_A = 0°C to 125º C, V_I=19V, I_O=40mA, C_I=0.33µF, C_O=0.1µF, unless otherwise specified (Note 1)

CHARACTERISTICS	SYMBOL	TEST CONDITIONS	MIN	TYP	MAX	UNIT
Output Voltage	V_O	T_J=25°C	11.5	12.0	12.5	V
Line Regulation	$V_{R\ LINE}$	T_J=25°C, 14.5V ≤ V_I ≤ 27V		55	250	mV
		T_J=25°C, 16V ≤ V_I ≤ 27V		49	200	
Load Regulation	$V_{R\ LOAD}$	T_J=25°C, 1mA ≤ I_O ≤ 100mA		22	100	mV
		T_J=25°C, 1mA ≤ I_O ≤ 40mA		13	50	
Output Voltage (Note 2)	V_O	14.5V ≤ V_I ≤ 27V, 1mA ≤ I_O ≤ 40mA	11.4	12	12.6	V
		14.5V ≤ V_I ≤ V_{MAX}, 1mA ≤ I_O ≤ 70mA	11.4	12	12.6	
Quiscent Current	I_Q	T_J=25°C		4.3	6.5	mA
Quiscent Current Change	ΔI_Q	(with Line) 16V ≤ V_I ≤ 27V			1.5	mA
		(with Load) 1mA ≤ I_O ≤ 40mA			0.1	
Noise	N_O	T_A=25°C, 10Hz ≤ f ≤ 100kHz		70		µV
Ripple Rejection	$\Delta V_I / \Delta V_O$	T_J=25°C, f=120kHz, 15V ≤ V_I ≤ 25V	37	42		dB
Dropout Voltage	V_{DO}	T_J=25°C		1.7		V

Note 1: The maximum steady state usable output current and input voltage are very dependent on the heat sinking and/or lead length of the package. The data above represent pulse test conditions with junction temperatures as indicated at the initiation of tests.
Note 2: Power Dissipation ≤ 0.75W.

■ ELECTRICAL CHARACTERISTICS GM78L15

T_A = 0°C to 125º C, V_I=23V, I_O=40mA, C_I=0.33µF, C_O=0.1µF, unless otherwise specified (Note 1)

CHARACTERISTICS	SYMBOL	TEST CONDITIONS	MIN	TYP	MAX	UNIT
Output Voltage	V_O	T_J=25°C	14.4	15.0	15.6	V
Line Regulation	$V_{R\ LINE}$	T_J=25°C, 17.5V ≤ V_I ≤ 30V		65	300	mV
		T_J=25°C, 20V ≤ V_I ≤ 30V		58	250	
Load Regulation	$V_{R\ LOAD}$	T_J=25°C, 1mA ≤ I_O ≤ 100mA		25	150	mV
		T_J=25°C, 1mA ≤ I_O ≤ 40mA		15	75	
Output Voltage (Note 2)	V_O	17.5V ≤ V_I ≤ 30V, 1mA ≤ I_O ≤ 40mA	14.25	15	15.75	V
		17.5V ≤ V_I ≤ V_{MAX}, 1mA ≤ I_O ≤ 70mA	14.25	15	15.75	
Quiscent Current	I_Q	T_J=25°C		4.7	6.5	mA
Quiscent Current Change	ΔI_Q	(with Line) 20V ≤ V_I ≤ 30V			1.5	mA
		(with Load) 1mA ≤ I_O ≤ 40mA			0.1	
Noise	N_O	T_A=25°C, 10Hz ≤ f ≤ 100kHz		82		µV
Ripple Rejection	$\Delta V_I / \Delta V_O$	T_J=25°C, f=120kHz,18.5V ≤ V_I ≤ 28.5V	34	39		dB
Dropout Voltage	V_{DO}	T_J=25°C		1.7		V

Note 1: The maximum steady state usable output current and input voltage are very dependent on the heat sinking and/or lead length of the package. The data above represent pulse test conditions with junction temperatures as indicated at the initiation of tests.
Note 2: Power Dissipation ≤ 0.75W.

■ ELECTRICAL CHARACTERISTICS GM78L18

T_A = 0°C to 125º C, V_I=26V, I_O=40mA, C_I=0.33µF, C_O=0.1µF, unless otherwise specified (Note 1)

CHARACTERISTICS	SYMBOL	TEST CONDITIONS	MIN	TYP	MAX	UNIT
Output Voltage	V_O	T_J=25°C	17.3	18.0	18.7	V
Line Regulation	$V_{R\ LINE}$	T_J=25°C, 20.5V ≤ V_I ≤ 33V		70	360	mV
		T_J=25°C, 22V ≤ V_I ≤ 33V		64	300	
Load Regulation	$V_{R\ LOAD}$	T_J=25°C, 1mA ≤ I_O ≤ 100mA		27	180	mV
		T_J=25°C, 1mA ≤ I_O ≤ 40mA		19	90	
Output Voltage (Note 2)	V_O	20.5V ≤ V_I ≤ 30V, 1mA ≤ I_O ≤ 40mA	17.1	18	18.9	V
		20.5V ≤ V_I ≤ V_{MAX}, 1mA ≤ I_O ≤ 70mA	17.1	18	18.9	
Quiscent Current	I_Q	T_J=25°C		4.7	6.5	mA
Quiscent Current Change	ΔI_Q	(with Line) 22V ≤ V_I ≤ 33V			1.5	mA
		(with Load) 1mA ≤ I_O ≤ 40mA			0.1	
Noise	N_O	T_A=25°C, 10Hz ≤ f ≤ 100kHz		89		µV
Ripple Rejection	$\Delta V_I / \Delta V_O$	T_J=25°C, f=120kHz,,21.5V ≤ V_I ≤ 31.5V	32	36		dB
Dropout Voltage	V_{DO}	T_J=25°C		1.7		V

Note 1: The maximum steady state usable output current and input voltage are very dependent on the heat sinking and/or lead length of the package. The data above represent pulse test conditions with junction temperatures as indicated at the initiation of tests.
Note 2: Power Dissipation ≤ 0.75W.

■ ELECTRICAL CHARACTERISTICS GM78L24

T_A = 0°C to 125º C, V_I=32V, I_O=40mA, C_I=0.33µF, C_O=0.1µF, unless otherwise specified (Note 1)

CHARACTERISTICS	SYMBOL	TEST CONDITIONS	MIN	TYP	MAX	UNIT
Output Voltage	V_O	T_J=25°C	23	24	25	V
Line Regulation	$V_{R\ LINE}$	T_J=25°C, 26.5V ≤ V_I≤ 39V		95	480	mV
		T_J=25°C, 29V ≤ V_I≤ 39V		78	400	
Load Regulation	$V_{R\ LOAD}$	T_J=25°C, 1mA ≤ I_O≤ 100mA		41	240	mV
		T_J=25°C, 1mA ≤ I_O≤ 40mA		28	120	
Output Voltage (Note 2)	V_O	26.5V ≤ V_I≤ 39V, 1mA ≤ I_O≤ 40mA	22.8	24	25.2	V
		26.5V ≤ V_I≤ V_{MAX}, 1mA ≤ I_O≤ 70mA	22.8	24	25.2	
Quiscent Current	I_Q	T_J=25°C		4.8	6.5	mA
Quiscent Current Change	ΔI_Q	(with Line) 22V ≤ V_I≤ 33V			1.5	mA
		(with Load) 1mA ≤ I_O≤ 40mA			0.1	
Noise	N_O	T_A=25°C, 10Hz ≤ f≤ 100kHz		97		µV
Ripple Rejection	$\Delta V_I / \Delta V_O$	T_J=25°C, f=120kHz,,27.5V ≤ V_I≤ 37.5V	30	33		dB
Dropout Voltage	V_{DO}	T_J=25°C		1.7		V

Note 1: The maximum steady state usable output current and input voltage are very dependent on the heat sinking and/or lead length of the package. The data above represent pulse test conditions with junction temperatures as indicated at the initiation of tests.
Note 2: Power Dissipation ≤ 0.75W.

■ ABSOLUTE MAXIMUM RATINGS

PARAMETER	SYMBOL	VALUE	UNITS
Input Voltage (5.0 to 15V)	V_I	35	V
Power Dissipation	P_D	internally limited	W
Operating Junction Temperature Range	T_J	0 to +125	°C
Storage Temperature Range	T_{stg}	-65 to +150	°C
Lead Temperature (soldering 10sec.)	T_L	265	°C

■ APPLICATION INFORMATION

Design Considerations

The GM78L series regulators have thermal overload protection from excessive power, internal short-circuit protection which limits each circuit's maximum current, and output transistor safe-area protection for reducing the output current as the voltage across each pass transistor is increased.

Although the internal power dissipation is limited, the junction temperature must be kept below the maximum specified temperature (125°C) in order to meet data sheet specifications.

Thermal Considerations

The TO-92 molded package is capable of unusually high power dissipation due to the lead frame design. However, its thermal capabilities are generally overlooked because of a lack of understanding of the thermal paths from the semiconductor junction to ambient temperature.

While thermal resistance is normally specified for the device mounted 1 cm above an infinite heat sink, very little has been mentioned of the options available to improve on the conservatively rated thermal capability. An explanation of the thermal paths of the TO-92 will allow the designer to determine the thermal stress he is applying in any given application.

The TO-92 Package

The TO-92 package thermal paths are complex. In addition to the path through the molding compound to ambient temperature, there is another path through the leads, in parallel with the case path, to ambient temperature, as shown in Figure 1.

The total thermal resistance in this model is then:

$$\theta_{JA} = \frac{(\theta_{JA} + \theta_{CA})(\theta_{JL} + \theta_{LA})}{\theta_{JA} + \theta_{CA} + \theta_{JL} + \theta_{LA}}$$

Where:

θ_{JC} = thermal resistance of the case between the regulator die and a point on the case directly above the die location.

θ_{CA} = thermal resistance between the case and air at ambient temperature.

θ_{JL} = thermal resistance from regulator die through the input lead to a point $^1/_{16}$ inch below the regulator case.

θ_{LA} = total thermal resistance of the input/output ground leads to ambient temperature.

θ_{JA} = junction to ambient thermal resistance.

FIGURE 1. TO-92 Thermal Equivalent Circuit

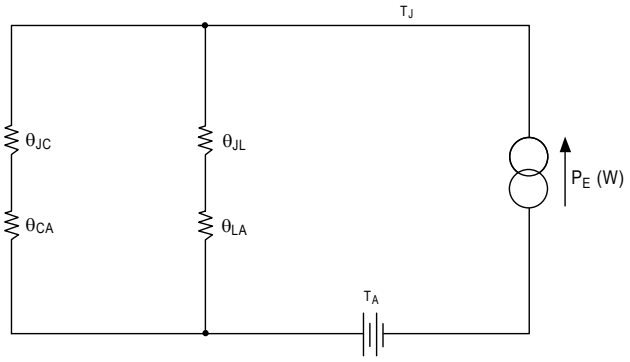

■ ORDERING INFORMATION

	OUTPUT VOLTAGE	PACKAGE		
		TO-92	SOT-89	SOP 8
GM78L00	5V	GM78L05-T92	GM78L05-ST89	GM78L05-S8
	6V	GM78L06-T92	GM78L06-ST89	GM78L06-S8
	8V	GM78L08-T92	GM78L08-ST89	GM78L08-S8
	9V	GM78L09-T92	GM78L09-ST89	GM78L09-S8
	10V	GM78L10-T92	GM78L10-ST89	GM78L10-S8
	12V	GM78L12-T92	GM78L12-ST89	GM78L12-S8
	15V	GM78L15-T92	GM78L15-ST89	GM78L15-S8
	18V	GM78L18-T92	GM78L18-ST89	GM78L18-S8
	24V	GM78L24-T92	GM78L24-ST89	GM78L24-S8

Компания «ЭлектроПласт» предлагает заключение долгосрочных отношений при поставках импортных электронных компонентов на взаимовыгодных условиях!

Наши преимущества:

- Оперативные поставки широкого спектра электронных компонентов отечественного и импортного производства напрямую от производителей и с крупнейших мировых складов;
- Поставка более 17-ти миллионов наименований электронных компонентов;
- Поставка сложных, дефицитных, либо снятых с производства позиций;
- Оперативные сроки поставки под заказ (от 5 рабочих дней);
- Экспресс доставка в любую точку России;
- Техническая поддержка проекта, помощь в подборе аналогов, поставка прототипов;
- Система менеджмента качества сертифицирована по Международному стандарту ISO 9001;
- Лицензия ФСБ на осуществление работ с использованием сведений, составляющих государственную тайну;
- Поставка специализированных компонентов (Xilinx, Altera, Analog Devices, Intersil, Interpoint, Microsemi, Aeroflex, Peregrine, Syfer, Eurofarad, Texas Instrument, Miteq, Cobham, E2V, MA-COM, Hittite, Mini-Circuits,General Dynamics и др.);

Помимо этого, одним из направлений компании «ЭлектроПласт» является направление «Источники питания». Мы предлагаем Вам помощь Конструкторского отдела:

- Подбор оптимального решения, техническое обоснование при выборе компонента;
- Подбор аналогов;
- Консультации по применению компонента;
- Поставка образцов и прототипов;
- Техническая поддержка проекта;
- Защита от снятия компонента с производства.

Как с нами связаться

Телефон: 8 (812) 309 58 32 (многоканальный)
Факс: 8 (812) 320-02-42
Электронная почта: org@eplast1.ru
Адрес: 198099, г. Санкт-Петербург, ул. Калинина, дом 2, корпус 4, литера А.