Power Entry Modules

The industry's most complete line of power entry modules are ideal for products that must conform to FCC Part 15 regulations. These metal cased miniature filters offer high performance.

Bolt-in Rear Terminals PF16-PF17
For General Purpose Applications PF22-PF23
For Medical Applications PF24-PF25

Bolt-in Right Angle Terminals PF18-PF19
For PCB Applications PF46-PF47

High Frequency Attenuation PF20-PF21
Bolt-in for PCB Applications PF48-PF49

Snap-in with Wire Leads PF26-PF27

Bolt-in with Wire Leads PF28-PF31

Snap-in Mount PF32-PF33

Fused Filtered PF34-PF37
For General Purpose Applications PF34-PF35
For Medical or General Purpose Applications PF36-PF37

Switched and Fused Filtered PF38-PF43

PCB Power Filters PF44-PF45

api technologies corp.
Spectrum Control

api technologies corp.
Spectrum Control

Power Entry Modules Bolt-in Rear Terminals

60-BPR & BPS Series

Tested and found to be IAW VDE 0565 Part 3.

Features

- Ideally suited for products that must conform to FCC part 15 regulations
- Metal case offers high performance
- Meets over voltage of IEC 664 category II and complies with IEC 950
- Uses IEC connector that meets most safety standards
- Solder lug and Fast-on tab terminals available
- Operating temperature: -25°C to +85°C (including temperature rise, see graph on page PF17)
- UL approved low leakage version also available

Applications

- Digital equipment
- Personal computers and peripherals
- Measuring instruments
- Monitor and display units

Circuit Diagram

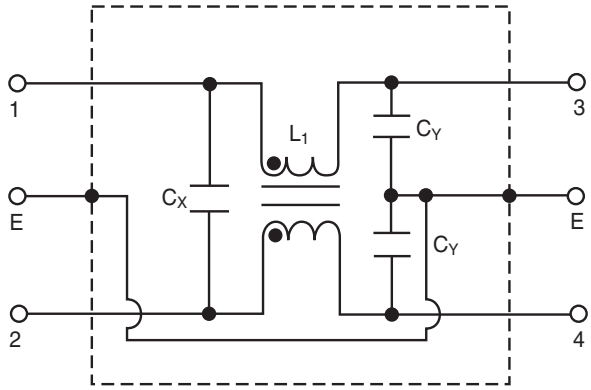

Specifications

Model*	Rated Voltage (@ 50/60Hz)	Rated Current	Leakage Current (Max.)	Capacitance C_Y	Capacitance C_X	Inductance (L_1)	Temperature Rise (Max.)
60-XXX-010-3-2	250VAC	1A	0.35mA	2200pF ± 20%	.022uF ± 20%	6.0mH	30°C
60-XXX-010-3-4					.047uF ± 20%		
60-XXX-010-5-2			0.50mA	3300pF ± 20%	.022uF ± 20%		
60-XXX-010-5-4					.047uF ± 20%		
60-XXX-020-3-2	250VAC	2A	0.35mA	2200pF ± 20%	.022uF ± 20%	2.4mH	30°C
60-XXX-020-3-4					.047uF ± 20%		
60-XXX-020-5-2			0.50mA	3300pF ± 20%	.022uF ± 20%		
60-XXX-020-5-4					.047uF ± 20%		
60-XXX-030-3-2	250VAC	3A	0.35mA	2200pF ± 20%	.022uF ± 20%	1.2mH	30°C
60-XXX-030-3-4					.047uF ± 20%		
60-XXX-030-5-2			0.50mA	3300pF ± 20%	.022uF ± 20%		
60-XXX-030-5-4					.047uF ± 20%		
60-XXX-060-3-2	250VAC	6A	0.35mA	2200pF ± 20%	.022uF ± 20%	0.53mH	45°C
60-XXX-060-3-4					.047uF ± 20%		
60-XXX-060-5-2			0.50mA	3300pF ± 20%	.022uF ± 20%		
60-XXX-060-5-4					.047uF ± 20%		
60-XXX-100-3-2	250VAC	10A	0.35mA	2200pF ± 20%	.022uF ± 20%	0.26mH	45°C
60-XXX-100-5-2			0.50mA	3300pF ± 20%			
60-BPR-150-3-11	250VAC	15A	0.35mA	2200pF ± 20%	.1uF ± 20%	0.15mH	45°C

Note: Test voltage: 1500VAC one minute, line to ground
Insulation resistance: 300 Mohm min. at 500VDC
Voltage drop: 1V max. at rated current
Weight: 45g
Input: Compatible with IEC-320

*** Substitute BPR or BPS for XXX**
BPS - Solder lug terminals
BPR - Fast-on tab terminals

API TECHNOLOGIES • 8061 Avonia Rd. • Fairview, PA 16415 • Ph: 814-474-1571 • Fax: 814-474-3110 • eis.apitech.com
API TECHNOLOGIES' SPECTRUM CONTROL GmbH • Hansastrasse 6 • 91126 Schwabach, Germany • Phone: (49)-9122-795-0 • Fax: (49)-9122-795-58

Power Entry Modules
Bolt-in Rear Terminals

60-BPR & BPS Series

Temperature Characteristics

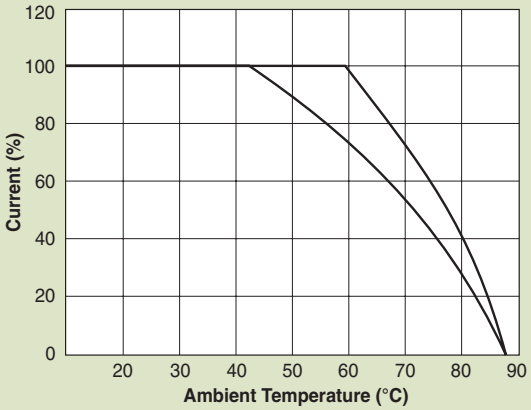

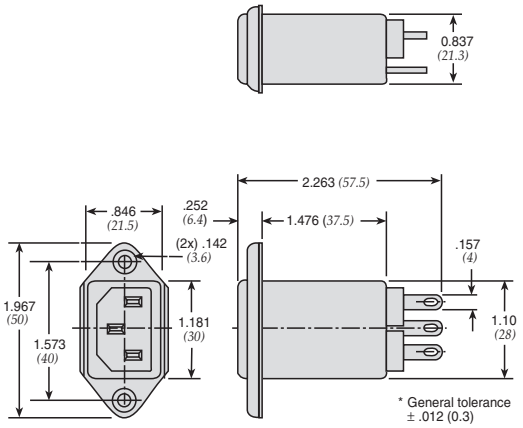

Dimensions in inches (*mm*)

Common Mode

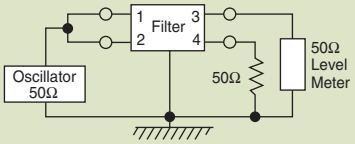

60-BPX-010;-020;-030

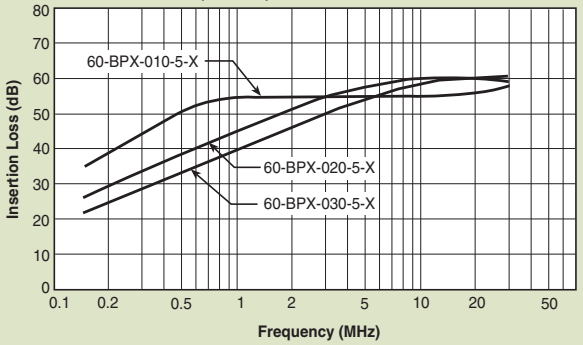

60-BPX-060;-100

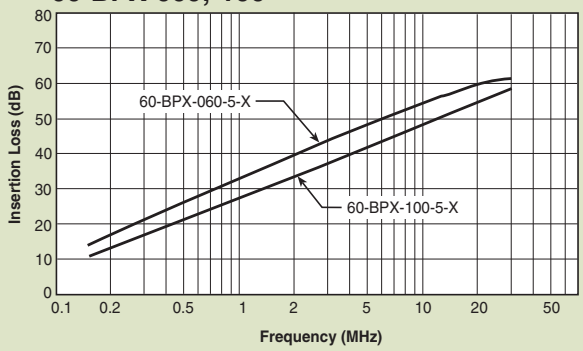

Normal Mode

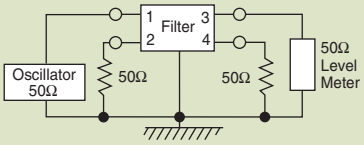

60-BPX-010;-020;-030

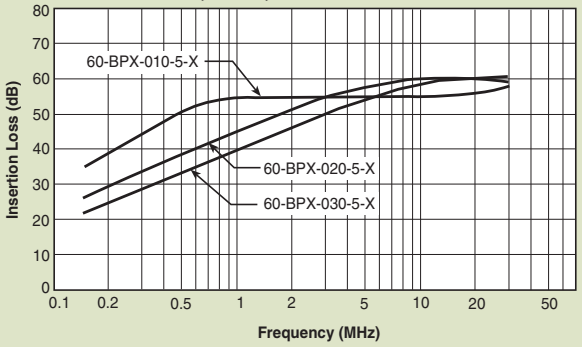

60-BPX-060;-100

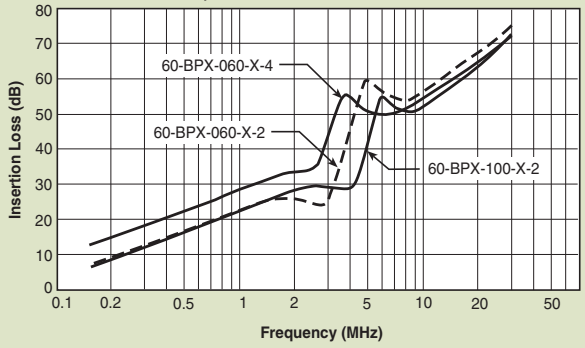

api technologies corp.
Spectrum Control

Power Entry Modules
Bolt-in Right Angle Terminals

60-BPF Series

Tested and found to be IAW VDE 0565 Part 3.

Features

- Ideally suited for products that must conform to FCC part 15 regulations
- Metal case offers high performance
- Meets over voltage of IEC 664 category II and complies with IEC 950
- Uses IEC connector that meets most safety standards
- PCB mounting types available (see page PF46)
- Length under tab is shortened for small spaces
- Operating temperature: -25°C to +85°C (including temperature rise, see graph on page PF19)
- UL approved low leakage version also available

Applications

- Digital equipment
- Personal computers and peripherals
- Measuring instruments
- Monitor and display units

Circuit Diagram

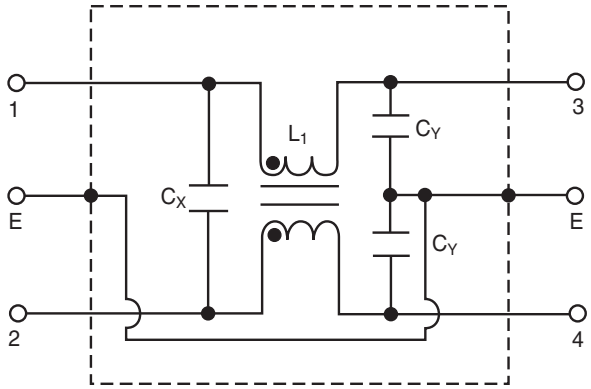

Specifications

Model	Rated Voltage (@ 50/60Hz)	Rated Current	Leakage Current (Max.)	Capacitance C_Y	Capacitance C_X	Inductance (L_1)	Temperature Rise (Max.)
60-BPF-010-3-2	250VAC	1A	0.35mA	2200pF ± 20%	.022uF ± 20%	6.0mH	30°C
60-BPF-010-3-4					.047uF ± 20%		
60-BPF-010-5-2			0.50mA	3300pF ± 20%	.022uF ± 20%		
60-BPF-010-5-4					.047uF ± 20%		
60-BPF-020-3-2	250VAC	2A	0.35mA	2200pF ± 20%	.022uF ± 20%	2.4mH	30°C
60-BPF-020-3-4					.047uF ± 20%		
60-BPF-020-5-2			0.50mA	3300pF ± 20%	.022uF ± 20%		
60-BPF-020-5-4					.047uF ± 20%		
60-BPF-030-3-2	250VAC	3A	0.35mA	2200pF ± 20%	.022uF ± 20%	1.2mH	30°C
60-BPF-030-3-4					.047uF ± 20%		
60-BPF-030-5-2			0.50mA	3300pF ± 20%	.022uF ± 20%		
60-BPF-030-5-4					.047uF ± 20%		
60-BPF-060-3-2	250VAC	6A	0.35mA	2200pF ± 20%	.022uF ± 20%	0.53mH	45°C
60-BPF-060-3-4					.047uF ± 20%		
60-BPF-060-5-2			0.50mA	3300pF ± 20%	.022uF ± 20%		
60-BPF-060-5-4					.047uF ± 20%		

Note: Test voltage: 1500VAC one minute, line to ground
Insulation resistance: 300 Mohm min. at 500VDC
Voltage drop: 1V max. at rated current
Weight: 50g
Input: Compatible with IEC-320

Power Entry Modules
Bolt-in Right Angle Terminals

60-BPF Series

Temperature Characteristics

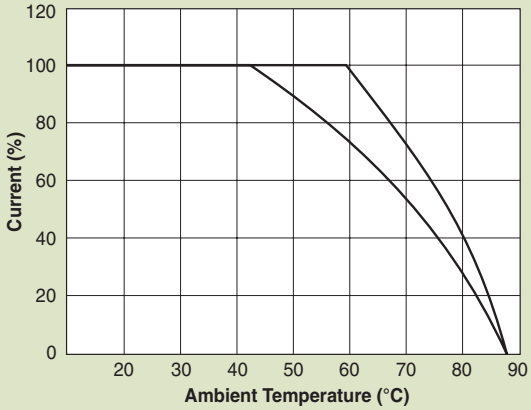

60-BPF Fast-on Terminals

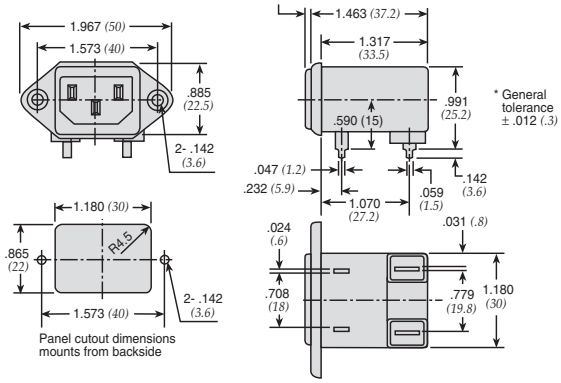

Dimensions in inches *(mm)*

Common Mode

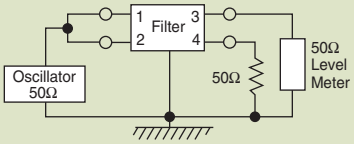

60-BPF-010;-020

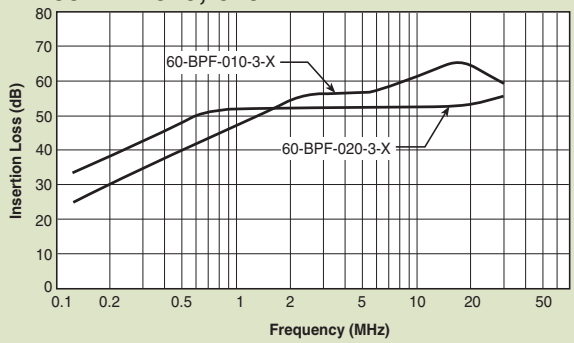

60-BPF-030;-060

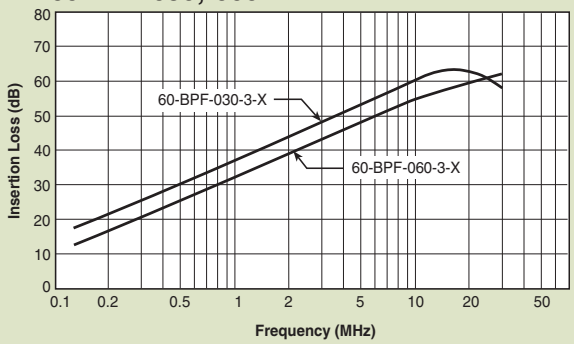

Normal Mode

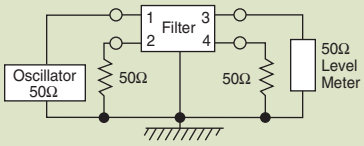

60-BPF-010;-020

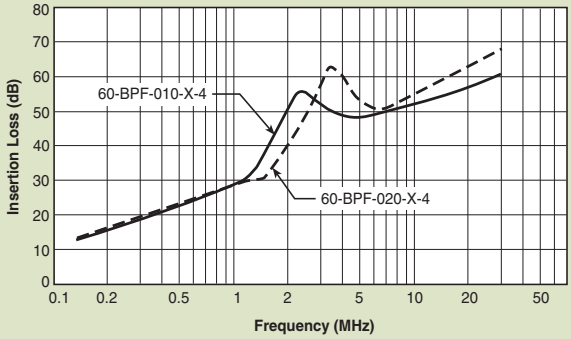

60-BPF-030;-060

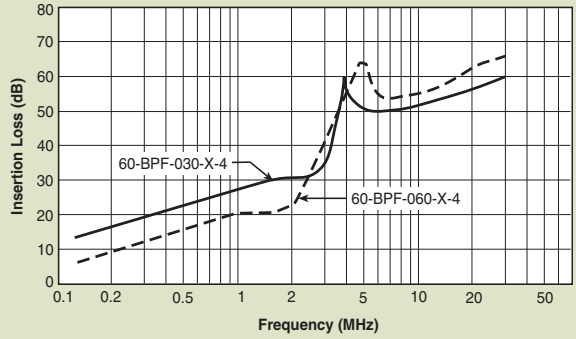

api technologies corp.
Spectrum Control

Power Entry Modules
High Frequency Attenuation

60-BHS Series

Tested and found to be IAW VDE 0565 Part 3.

Features

- Ideally suited for products that must conform to FCC part 15 regulations
- Metal cased miniature filter offers high performance
- Meets over voltage of IEC 664 category II and complies with IEC 950
- PCB mounting types available (see page PF48)
- PCB mounting minimizes space and provides economical installation
- Excellent filtering characteristics for high frequencies
- Earth coil standard
- Operating temperature: -25°C to +85°C (including temperature rise, see graph on page PF21)

Applications

- Digital equipment
- Personal computers and peripherals
- Measuring instruments
- Monitor and display units

Circuit Diagram

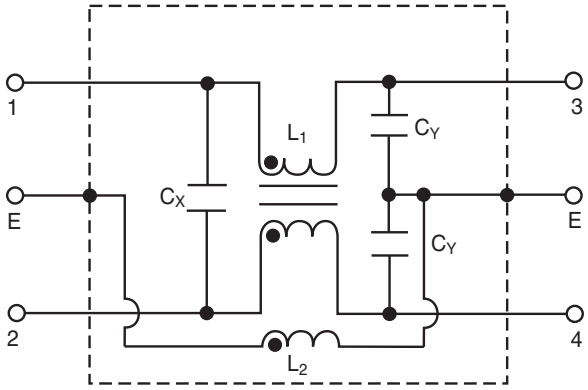

Specifications

Model	Rated Voltage (@ 50/60Hz)	Rated Current	Leakage Current (Max.)	Capacitance C_Y	Capacitance C_X	Inductance (L_1)	Inductance (L_2)	Temperature Rise (Max.)
60-BHS-010-3-11	250VAC	1A	0.35mA	2200pF ± 20%	0.1uF ± 20%	6mH	18.3uH	30°C
60-BHS-010-3-4					.047uF ± 20%			
60-BHS-010-5-11			0.50mA	3300pF ± 20%	0.1uF ± 20%			
60-BHS-010-5-4					.047uF ± 20%			
60-BHS-020-3-11	250VAC	2A	0.35mA	2200pF ± 20%	0.1uF ± 20%	2.4mH	18.3uH	30°C
60-BHS-020-3-4					.047uF ± 20%			
60-BHS-020-5-11			0.50mA	3300pF ± 20%	0.1uF ± 20%			
60-BHS-020-5-4					.047uF ± 20%			
60-BHS-030-3-11	250VAC	3A	0.35mA	2200pF ± 20%	0.1uF ± 20%	1.2mH	18.3uH	30°C
60-BHS-030-3-4					.047uF ± 20%			
60-BHS-030-5-11			0.50mA	3300pF ± 20%	0.1uF ± 20%			
60-BHS-030-5-4					.047uF ± 20%			
60-BHS-060-3-11	250VAC	6A	0.35mA	2200pF ± 20%	0.1uF ± 20%	.53mH	18.3uH	45°C
60-BHS-060-3-4					.047uF ± 20%			
60-BHS-060-5-11			0.50mA	3300pF ± 20%	0.1uF ± 20%			
60-BHS-060-5-4					.047uF ± 20%			

Note: Test voltage: 1500VAC one minute, line to ground
Insulation resistance: 300 Mohm min. at 500VDC
Voltage drop: 1V max. at rated current
Weight: 50g
Input: Compatible with IEC-320

Power Entry Modules
High Frequency Attenuation

60-BHS Series

Temperature Characteristics

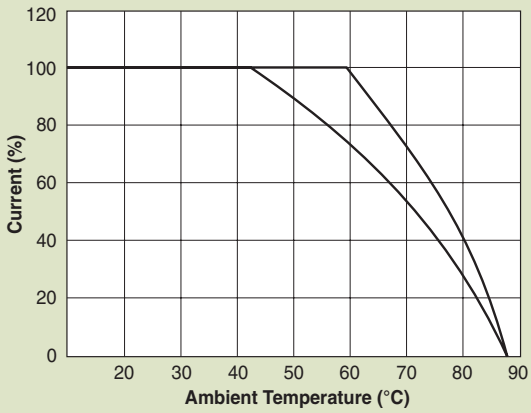

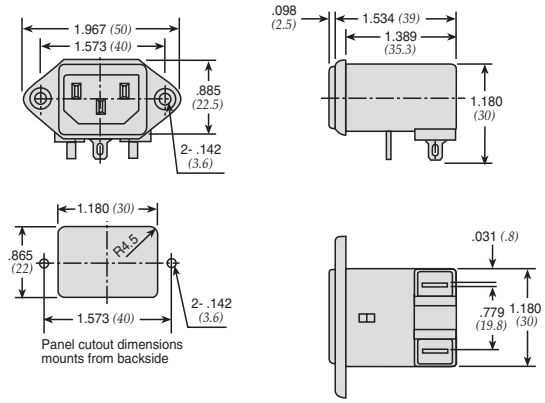

Dimensions in inches *(mm)*

Common Mode

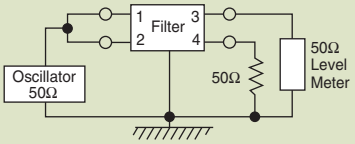

60-BHS-XXX-X-11

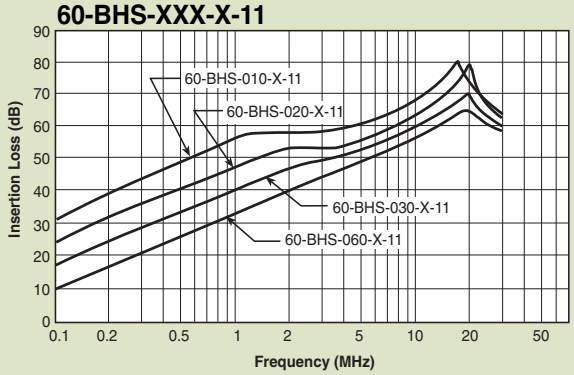

60-BHS-XXX-X-4

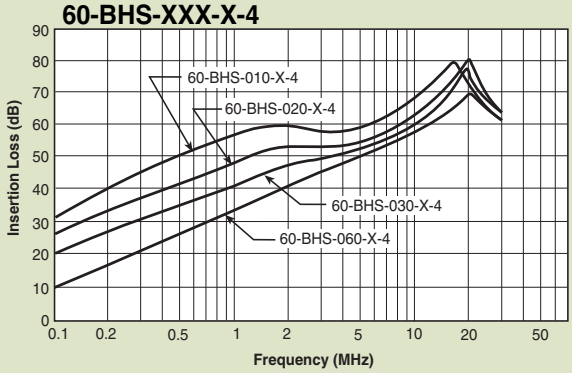

Normal Mode

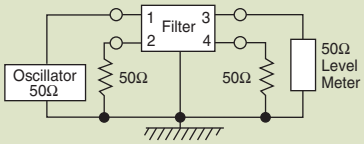

60-BHS-XXX-3-11

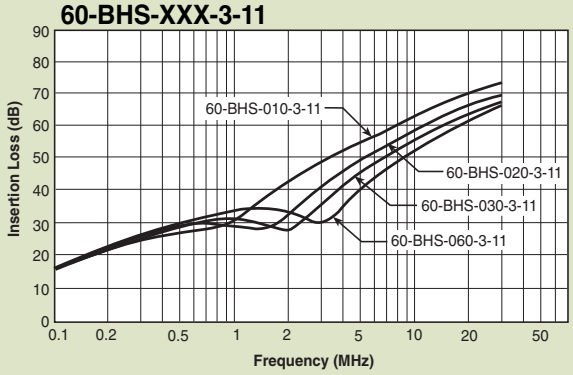

60-BHS-XXX-3-4

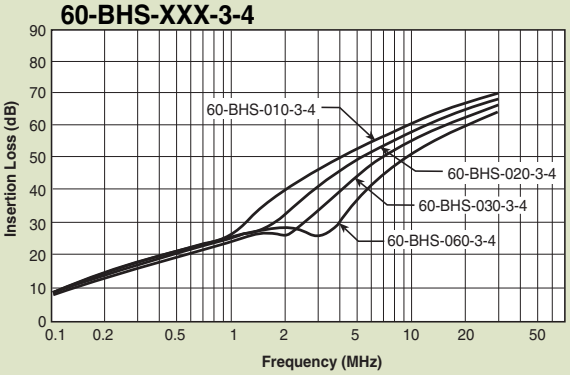

api technologies corp.
Spectrum Control

Power Entry Modules
Bolt-in Rear Terminals
For General Purpose Applications

10-BPF Series

Features

- Ideally suited for products that must conform to FCC part 15 regulations
- Metal case offers high performance
- Meets over voltage of IEC 664 category II and complies with IEC 950
- Uses IEC connector that meets most safety standards
- Operating temperature: -25°C to +70°C
- Compact configuration

Applications

- Digital equipment
- Personal computers and peripherals
- Measuring instruments
- Monitor and display units

Circuit Diagram

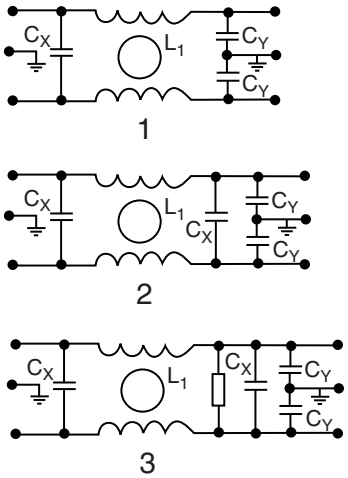

Specifications

Model	Rated Voltage (@ 50/60Hz)	Rated Current	Leakage Current (Max.)	Capacitance C_Y	Capacitance C_X	Inductance (L_1)	Circuit Diagram	Figure	Temperature Rise (Max.)
10-BPF-001-5-A	120/250VAC	1A	0.50mA	3300pF	2200pF	3.0mH	1	A	30°C
10-BPF-001-5-C								C	
10-BPF-003-5-A		3A			0.01uF	1.5mH		A	
10-BPF-003-5-C								C	
10-BPF-003-5-D				4700pF			2	B	
10-BPF-006-5-A		6A		3300pF		0.5mH	1	A	
10-BPF-006-5-C								C	
10-BPF-006-5-D				3300pF & 0.01uF	3300pF & 0.01uF	1.5mH	2	B	
10-BPF-010-5-A		10A		3300pF	0.01uF	0.5mH	1	A	
10-BPF-010-5-D				3300pF & 0.01uF	3300pF & 0.01uF	1.5mH	3	B	

Note: Test voltage: 1500VAC one minute, line to ground
Insulation resistance: 300 Mohm min. at 500VDC
Voltage drop: 1V max. at rated current
Weight: 45g
Input: Compatible with IEC-320

api technologies corp.
Spectrum Control

Power Entry Modules
Bolt-in Rear Terminals
For General Purpose Applications

10-BPF Series

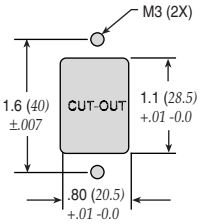

Figure A

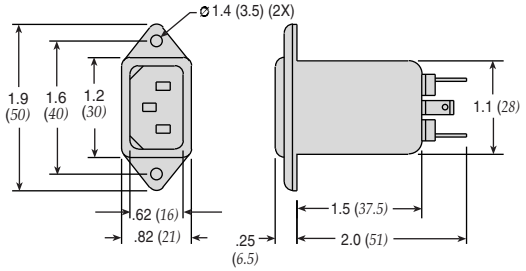

Figure B

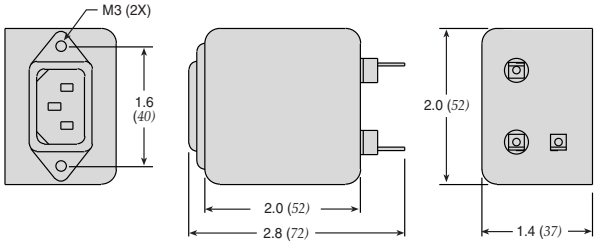

Figure C

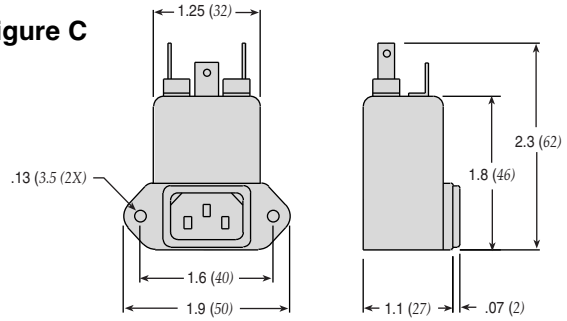

Dimensions in inches (*mm*)

Common Mode

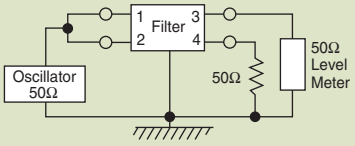

10-BPF-001;-003

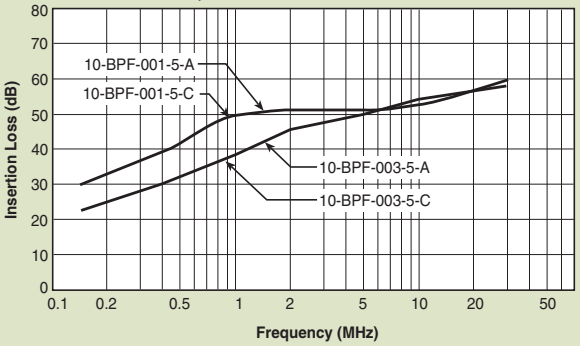

10-BPF-006;-010

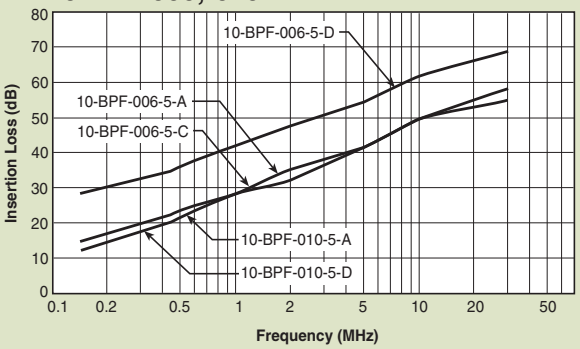

Normal Mode

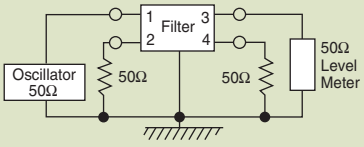

10-BPF-001;-003

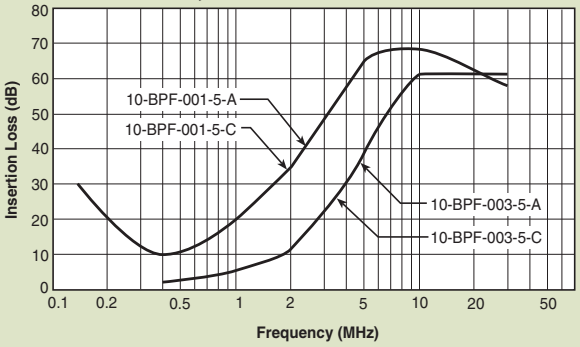

10-BPF-006;-010

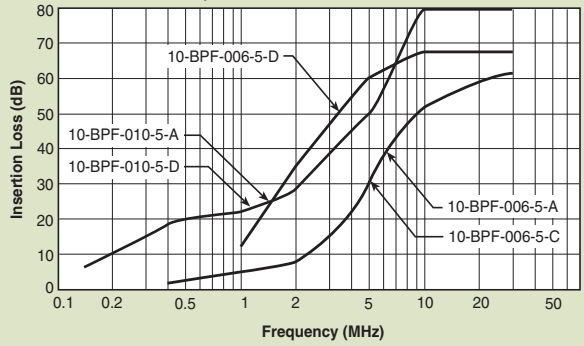

api technologies corp.
Spectrum Control

Power Entry Modules Bolt-in Rear Terminals

For Medical Purpose Applications

10-BPF Series

Features

- Ideally suited for products that must conform to FCC part 15 regulations
- Metal case offers high performance
- Meets over voltage of IEC 664 category II and complies with IEC 950
- Uses IEC connector that meets most safety standards
- Operating temperature: -25°C to +70°C
- Compact configuration
- Low leakage current

Applications

- Digital equipment
- Personal computers and peripherals
- Measuring instruments
- Monitor and display units

Circuit Diagram

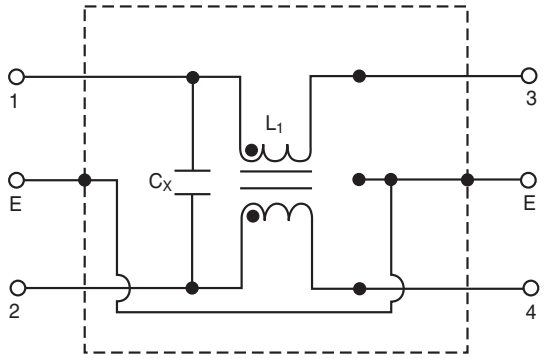

Specifications

Model	Rated Voltage (@ 50/60Hz)	Rated Current	Leakage Current (Max.)	Capacitance C_X	Inductance (L_1)	Circuit Diagram	Figure	Temperature Rise (Max.)
10-BPF-001-2-A	120/250VAC	1A	5uA	0.01uF	3.0mH	1	A	30°C
10-BPF-003-2-A		3A			1.5mH			
10-BPF-006-2-A		6A			0.5mH			

Note: Test voltage: 1500VAC one minute, line to ground
Insulation resistance: 300 Mohm min. at 500VDC
Voltage drop: 1V max. at rated current
Weight: 45g
Input: Compatible with IEC-320

api technologies corp.
Spectrum Control

Power Entry Modules
Bolt-in Rear Terminals
For Medical Purpose Applications

10-BPF Series

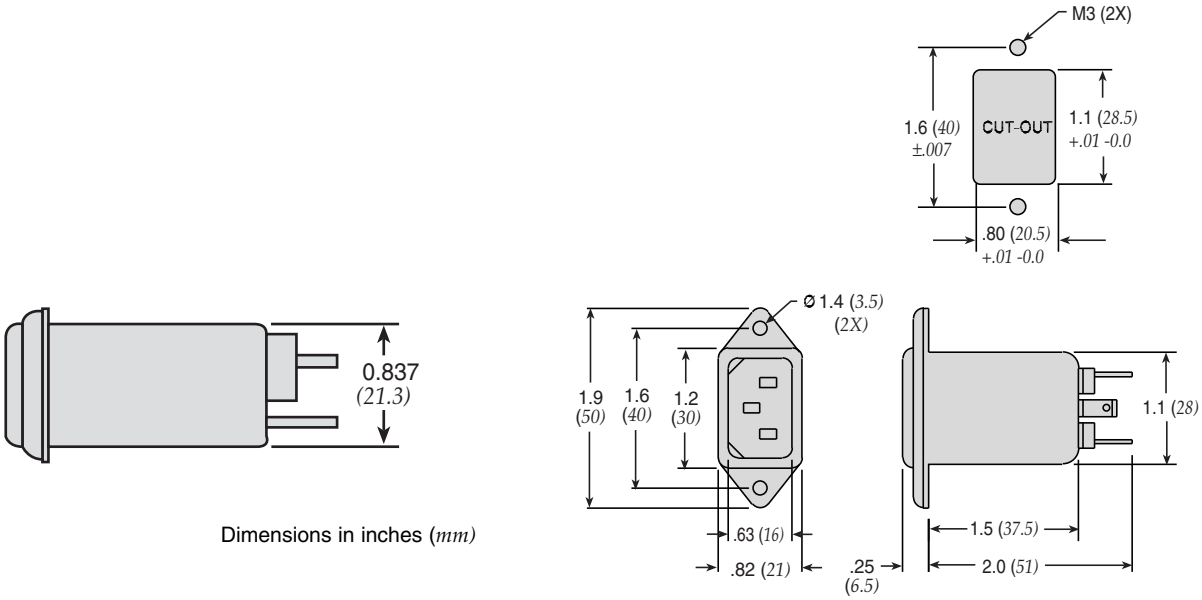

Dimensions in inches (*mm*)

Common Mode

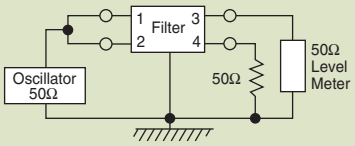

10-BPF-001;-003;-006

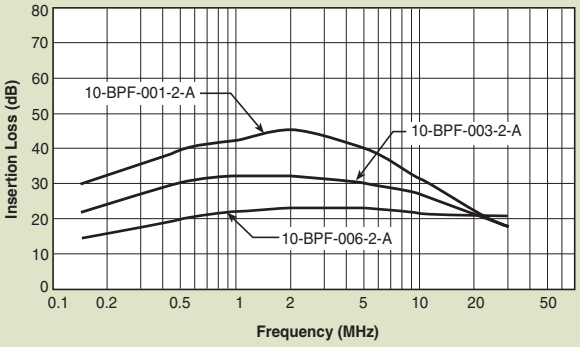

Normal Mode

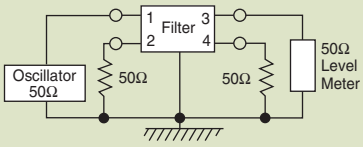

10-BPF-001;-003;-006

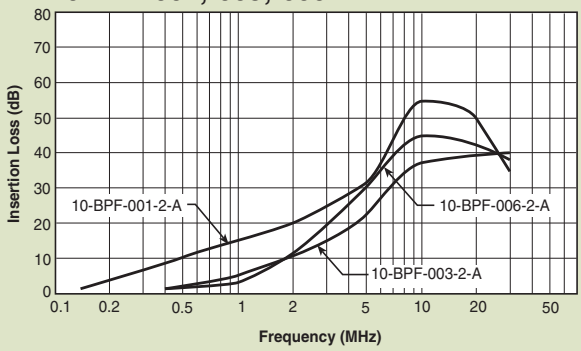

api technologies corp.
Spectrum Control

Power Entry Modules Snap-in with Wire Leads

60-SPL Series

Tested and found to be IAW VDE 0565 Part 3.

Features

- Ideally suited for products that must conform to FCC part 15 regulations
- Metal cased miniature filter offers high performance
- Meets over voltage of IEC 664 category II and complies with IEC 950
- Uses IEC connector that meets most safety standards
- Snap-in style saves labor and hardware inventory
- Wire output minimizes space and provides economical installation
- Operating temperature: -25°C to +85°C (including temperature rise, see graph on page PF27)

Applications

- Digital equipment
- Personal computers and peripherals
- Measuring instruments
- Monitor and display units

Circuit Diagram

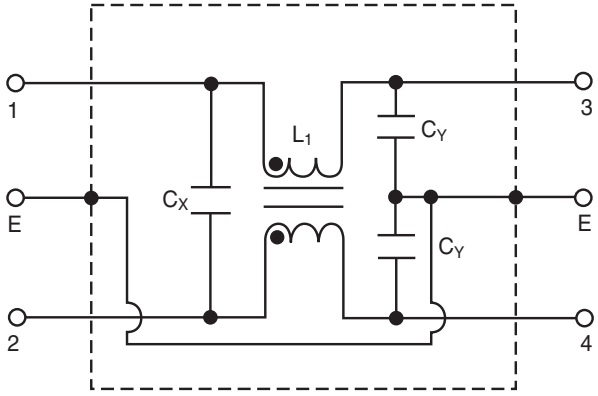

Specifications

Model	Rated Voltage (@ 50/60Hz)	Rated Current	Leakage Current (Max.)	Capacitance C_Y	Capacitance C_X	Inductance (L_1)	Temperature Rise (Max.)
60-SPL-010-3-2	250VAC	1A	0.35mA	2200pF ± 20%	22nF ± 20%	6.0mH	30°C
60-SPL-010-3-3					33nF ± 20%		
60-SPL-010-5-2			0.50mA	3300pF ± 20%	22nF ± 20%		
60-SPL-010-5-3					33nF ± 20%		
60-SPL-020-3-2	250VAC	2A	0.35mA	2200pF ± 20%	22nF ± 20%	2.4mH	30°C
60-SPL-020-3-3					33nF ± 20%		
60-SPL-020-5-2			0.50mA	3300pF ± 20%	22nF ± 20%		
60-SPL-020-5-3					33nF ± 20%		
60-SPL-030-3-2	250VAC	3A	0.35mA	2200pF ± 20%	.022uF ± 20%	1.2mH	30°C
60-SPL-030-3-3				3300pF ± 20%			
60-SPL-030-5-2			0.50mA	2200pF ± 20%	.033uF ± 20%		
60-SPL-030-5-3				3300pF ± 20%			
60-SPL-060-3-2	250VAC	6A	0.35mA	2200pF ± 20%	22nF ± 20%	0.53mH	45°C
60-SPL-060-3-3					33nF ± 20%		
60-SPL-060-5-2			0.50mA	3300pF ± 20%	22nF ± 20%		
60-SPL-060-5-3					33nF ± 20%		

Note: Test voltage: 1500VAC one minute, line to ground
Insulation resistance: 300 Mohm min. at 500VDC
Voltage drop: 1V max. at rated current
Weight: 50g
Input: Compatible with IEC-320

Power Entry Modules
Snap-in with Wire Leads

60-SPL Series

Temperature Characteristics

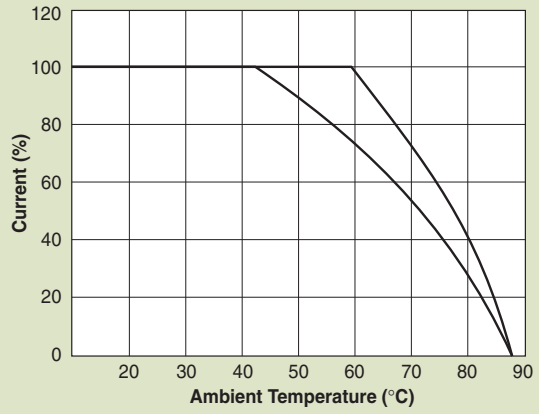

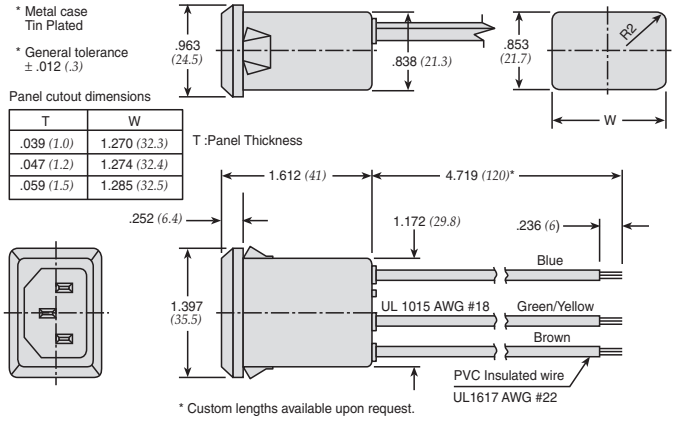

T	W
.039 (1.0)	1.270 (32.3)
.047 (1.2)	1.274 (32.4)
.059 (1.5)	1.285 (32.5)

Dimensions in inches *(mm)*

Common Mode

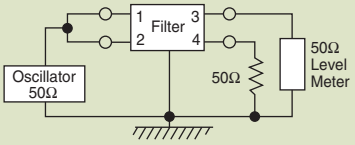

60-SPL-010;-020

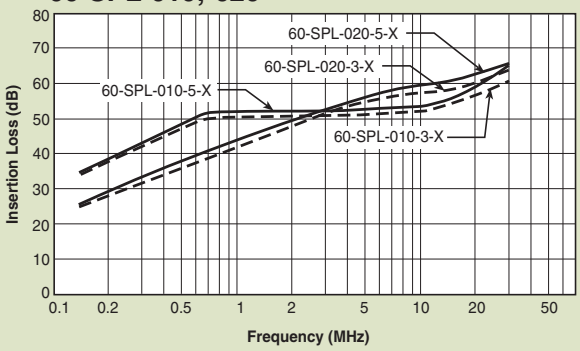

60-SPL-030;-060

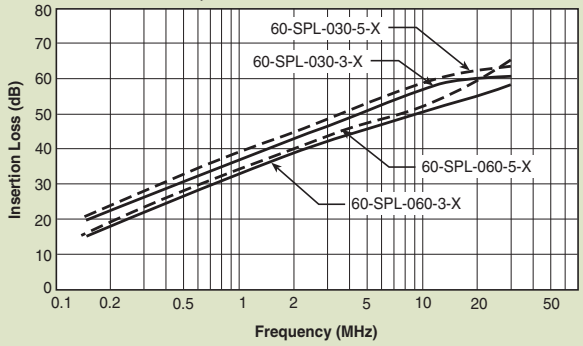

Normal Mode

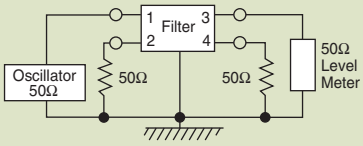

60-SPL-010;-020

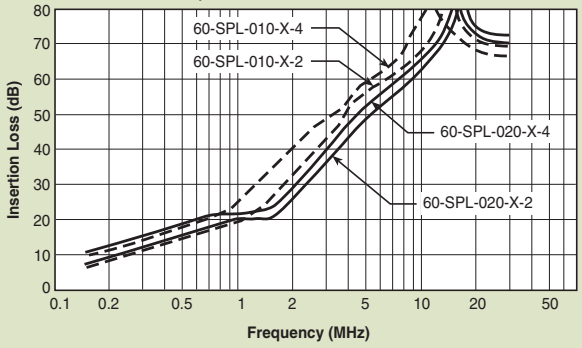

60-SPL-030;-060

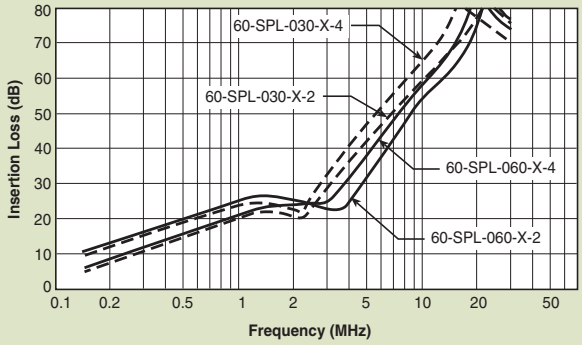

api technologies corp.
Spectrum Control

Power Entry Modules Bolt-in with Wire Leads

60-BPL Series

Tested and found to be IAW VDE 0565 Part 3.

Features

- Ideally suited for products that must conform to FCC part 15 regulations
- Metal case filter offers high performance
- Meets over voltage of IEC 664 category II and complies with IEC 950
- Uses IEC connector that meets most safety standards
- Wire output for minimizing space use and economical installation
- Operating temperature: -25°C to +85°C (including temperature rise, see graph on page PF28)

Applications

- Digital equipment
- Personal computers and peripherals
- Measuring instruments
- Monitor and display units

Circuit Diagram

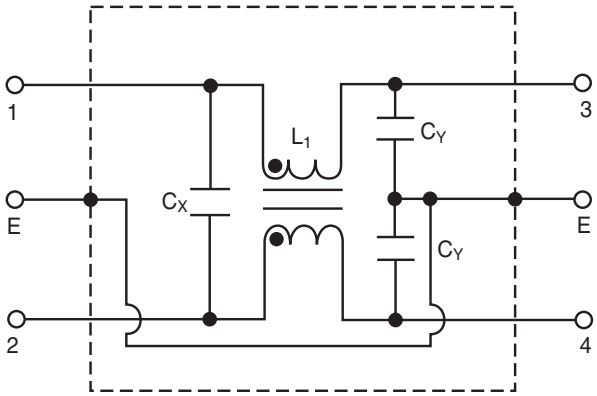

Specifications

Model	Rated Voltage (@ 50/60Hz)	Rated Current	Leakage Current (Max.)	Capacitance C_Y	Capacitance C_X	Inductance (L_1)	Temperature Rise (Max.)
60-BPL-010-3-2	250VAC	1A	0.35mA	2200pF ± 20%	22nF ± 20%	6.0mH	30°C
60-BPL-010-3-3					33nF ± 20%		
60-BPL-010-5-2			0.50mA	3300pF ± 20%	22nF ± 20%		
60-BPL-010-5-3					33nF ± 20%		
60-BPL-020-3-2	250VAC	2A	0.35mA	2200pF ± 20%	22nF ± 20%	2.4mH	30°C
60-BPL-020-3-3					33nF ± 20%		
60-BPL-020-5-2			0.50mA	3300pF ± 20%	22nF ± 20%		
60-BPL-020-5-3					33nF ± 20%		
60-BPL-030-3-2	250VAC	3A	0.35mA	2200pF ± 20%	.022uF ± 20%	1.2mH	30°C
60-BPL-030-3-3				3300pF ± 20%			
60-BPL-030-5-2			0.50mA	2200pF ± 20%	.033uF ± 20%		
60-BPL-030-5-3				3300pF ± 20%			
60-BPL-060-3-2	250VAC	6A	0.35mA	2200pF ± 20%	22nF ± 20%	0.53mH	45°C
60-BPL-060-3-3					33nF ± 20%		
60-BPL-060-5-2			0.50mA	3300pF ± 20%	22nF ± 20%		
60-BPL-060-5-3					33nF ± 20%		

Note: Test voltage: 1500VAC one minute, line to ground
Insulation resistance: 300 Mohm min. at 500VDC
Voltage drop: 1V max. at rated current
Weight: 50g
Input: Compatible with IEC-320

Power Entry Modules
Bolt-in with Wire Leads

60-BPL Series

Temperature Characteristics

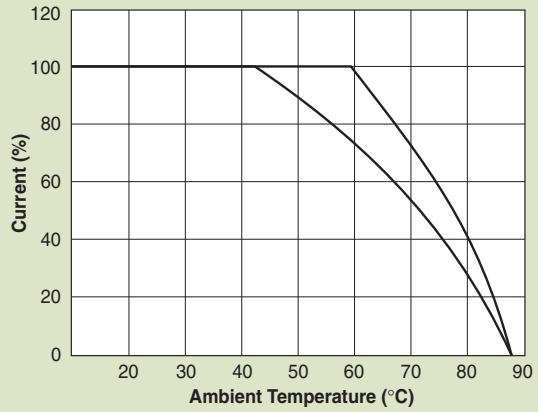

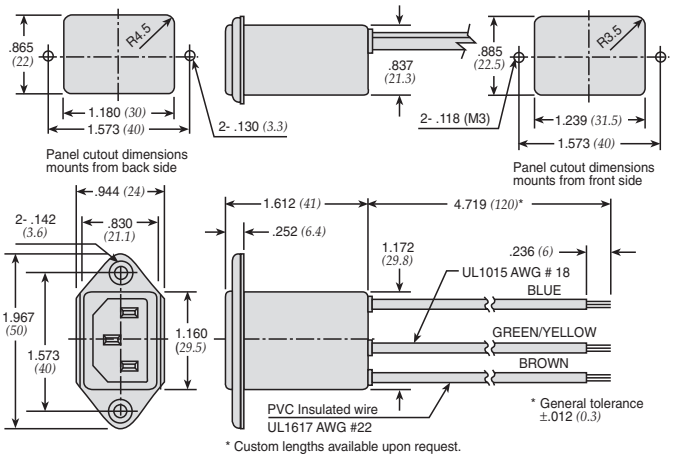

Dimensions in inches *(mm)*

Common Mode

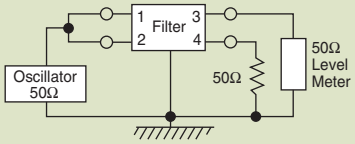

60-BPL-010;-020

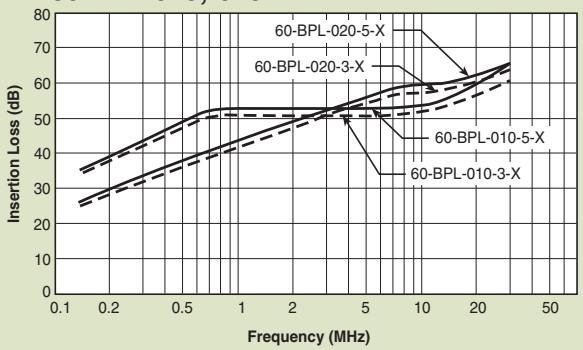

60-BPL-030;-060

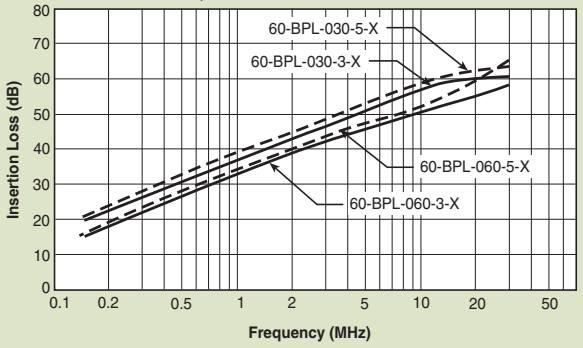

Normal Mode

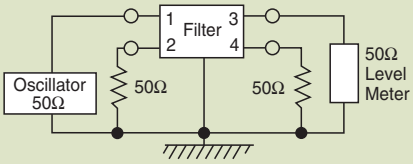

60-BPL-010;-020

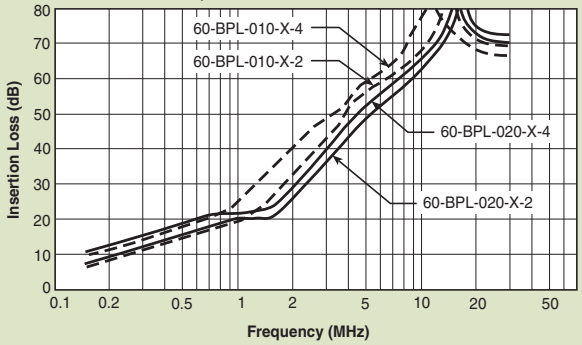

60-BPL-030;-060

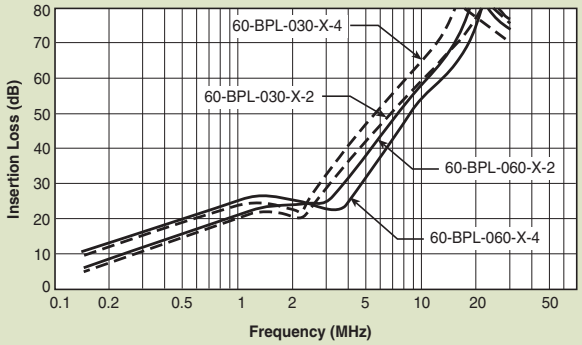

api technologies corp.
Spectrum Control

Power Entry Modules Bolt-in with Wire Leads

10-BPL Series

Features

- Ideally suited for products that must conform to FCC part 15 regulations
- Metal case filter offers high performance
- Meets over voltage of IEC 664 category II and complies with IEC 950
- Uses IEC connector that meets most safety standards
- Wire output for minimizing space use and economical installation
- Operating temperature: -25°C to +70°C
- Compact configuration

Applications

- Digital equipment
- Personal computers and peripherals
- Measuring instruments
- Monitor and display units

Circuit Diagram

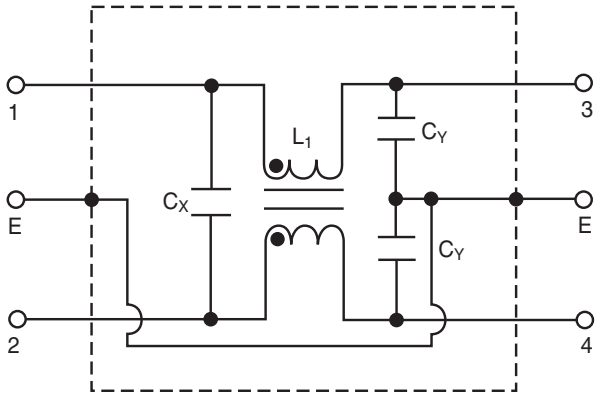

Specifications

Model	Rated Voltage (@ 50/60Hz)	Rated Current	Leakage Current (Max.)	Capacitance C_Y	Capacitance C_X	Inductance (L_1)	Circuit Diagram	Figure	Temperature Rise (Max.)
10-BPL-001-5-B	250VAC	1A	0.50mA	3300pF	0.01uF	3.0mH	1	A	30°C
10-BPL-003-5-B		3A				1.5mH			
10-BPL-006-5-B		6A				0.5mH			

Note: Test voltage: 1500VAC one minute, line to ground
Insulation resistance: 300 Mohm min. at 500VDC
Voltage drop: 1V max. at rated current
Weight: 50g
Input: Compatible with IEC-320

Power Entry Modules
Bolt-in with Wire Leads

10-BPL Series

Figure A

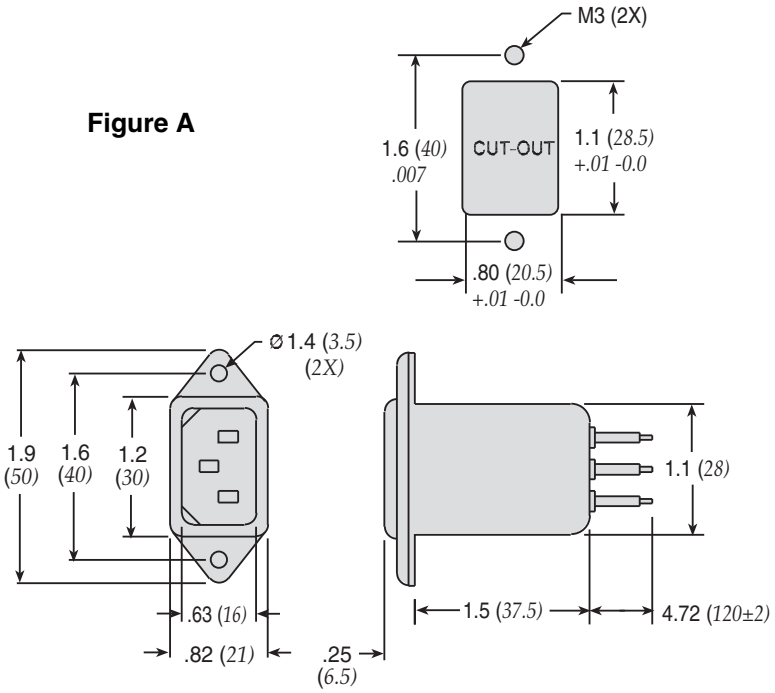

Dimensions in inches *(mm)*

Common Mode

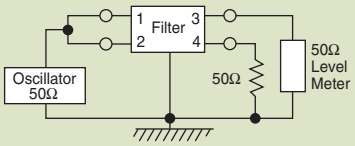

10-BPL-001;-003;-006

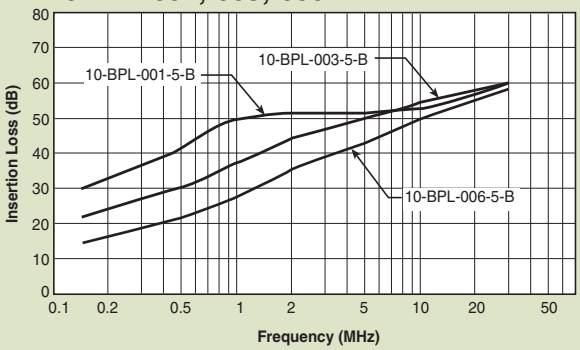

Normal Mode

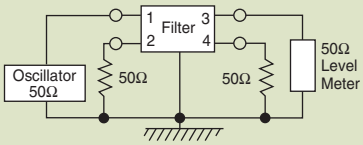

10-BPL-001;-003;-006

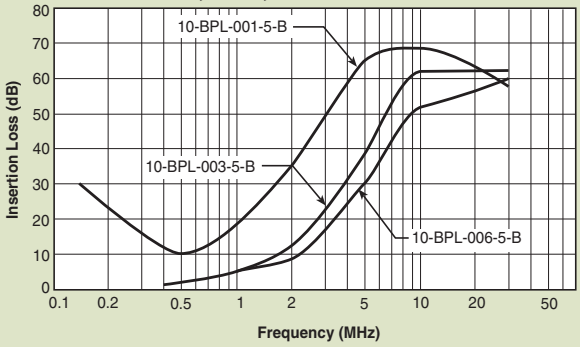

api technologies corp.
Spectrum Control

Power Entry Modules Snap-in Mount

60-SPR & SPS Series

Tested and found to be IAW VDE 0565 Part 3.

Features

- Ideally suited for products that must conform to FCC part 15 regulations
- Metal cased miniature filter offers high performance
- Meets over voltage of IEC 664 category II and complies with IEC 950
- Uses IEC connector that meets most safety standards
- Snap-in style saves labor and hardware inventory
- Solder lug and fast-on tab terminations available
- Operating temperature: -25°C to +85°C (including temperature rise, see graph on page PF33)
- UL approved low leakage version also available

Applications

- Digital equipment
- Personal computers and peripherals
- Measuring instruments
- Monitor and display units

Circuit Diagram

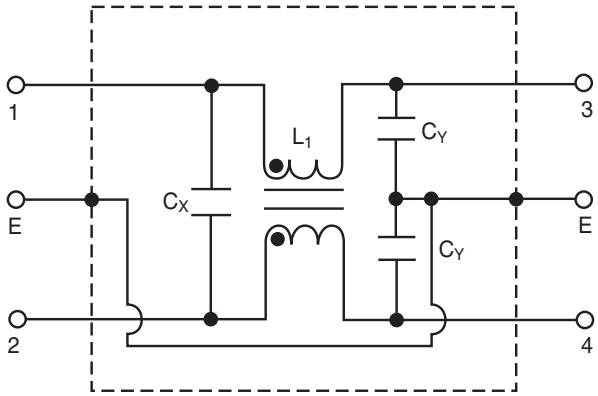

Specifications

Model*	Rated Voltage (@ 50/60Hz)	Rated Current	Leakage Current (Max.)	Capacitance C_Y	Capacitance C_X	Inductance (L_1)	Temperature Rise (Max.)
60-XXX-010-3-2	250VAC	1A	0.35mA	2200pF ± 20%	.022uF ± 20%	6.0mH	30°C
60-XXX-010-3-4					.047uF ± 20%		
60-XXX-010-5-2			0.50mA	3300pF ± 20%	.022uF ± 20%		
60-XXX-010-5-4					.047uF ± 20%		
60-XXX-020-3-2	250VAC	2A	0.35mA	2200pF ± 20%	.022uF ± 20%	2.4mH	30°C
60-XXX-020-3-4					.047uF ± 20%		
60-XXX-020-5-2			0.50mA	3300pF ± 20%	.022uF ± 20%		
60-XXX-020-5-4					.047uF ± 20%		
60-XXX-030-3-2	250VAC	3A	0.35mA	2200pF ± 20%	.022uF ± 20%	1.2mH	30°C
60-XXX-030-3-4					.047uF ± 20%		
60-XXX-030-5-2			0.50mA	3300pF ± 20%	.022uF ± 20%		
60-XXX-030-5-4					.047uF ± 20%		
60-XXX-060-3-2	250VAC	6A	0.35mA	2200pF ± 20%	.022uF ± 20%	0.53mH	45°C
60-XXX-060-3-4					.047uF ± 20%		
60-XXX-060-5-2			0.50mA	3300pF ± 20%	.022uF ± 20%		
60-XXX-060-5-4					.047uF ± 20%		
60-XXX-100-3-2	250VAC	10A	0.35mA	2200pF ± 20%	.022uF ± 20%	0.26mH	45°C
60-XXX-100-5-2			0.50mA	3300pF ± 20%			
60-SPR-150-3-11	250VAC	15A	0.35mA	2200pF ± 20%	.1uF ± 20%	0.15mH	45°C

Note: Test voltage: 1500VAC one minute, line to ground
Insulation resistance: 300 Mohm min. at 500VDC
Voltage drop: 1V max. at rated current
Weight: 45g
Input: Compatible with IEC-320

*** Substitute SPR or SPS for XXX**
60-SPR - Fast-on terminals
60-SPS - Solder lug terminals

api technologies corp.
Spectrum Control

Power Entry Modules
Snap-in Mount

60-SPR & SPS Series

Temperature Characteristics

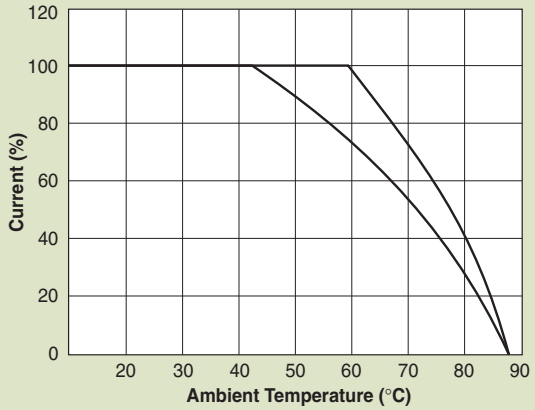

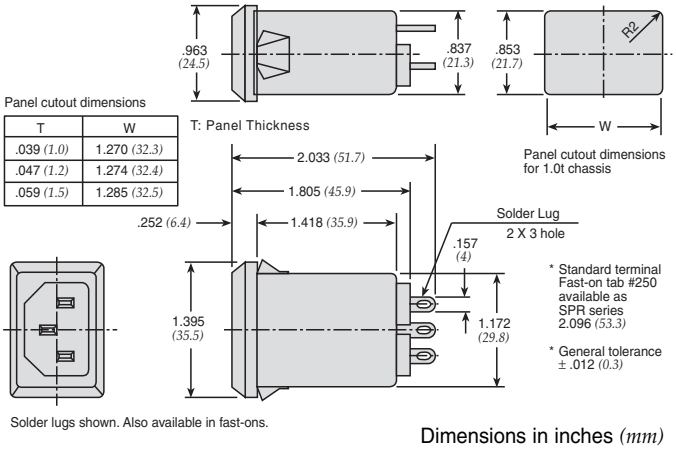

Panel cutout dimensions

T	W
.039 (1.0)	1.270 (32.3)
.047 (1.2)	1.274 (32.4)
.059 (1.5)	1.285 (32.5)

Dimensions in inches *(mm)*

Common Mode

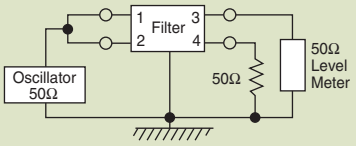

60-SPX-010;-020;-030

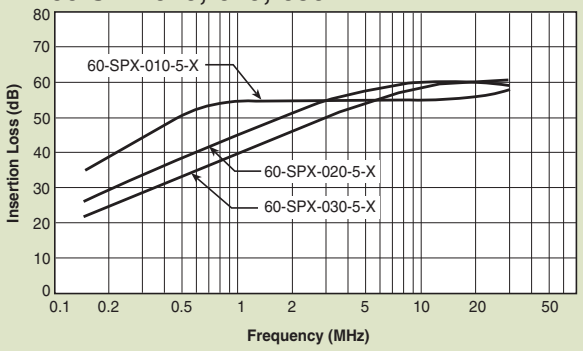

60-SPX-060;-100

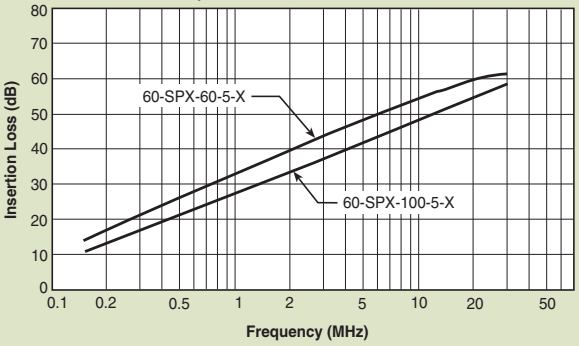

Normal Mode

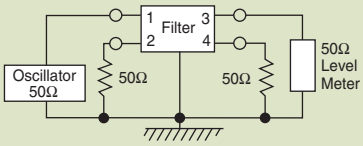

60-SPX-010;-020;-030

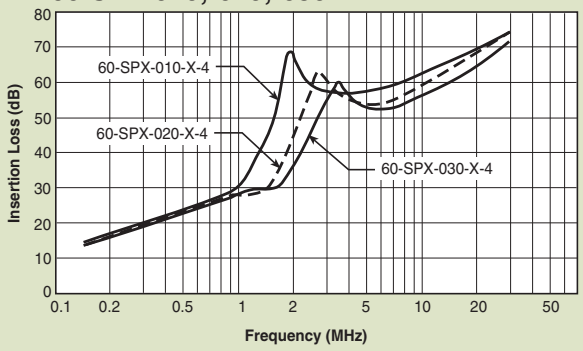

60-SPX-060;-100

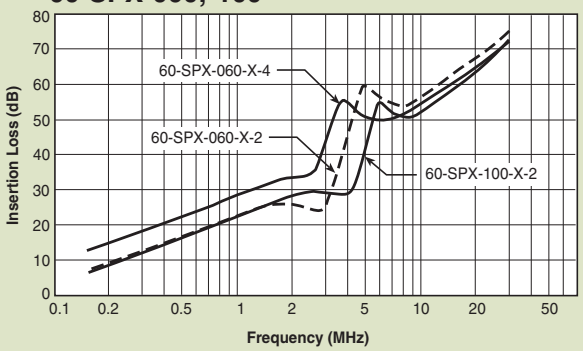

api technologies corp.
Spectrum Control

Fused Filtered Power Entry Modules
For General Purpose Applications

64-65-BFF/64-65-BFS Series

Tested and found to be IAW VDE 0565 Part 3.

Features

- North American and Metric fuse holders available
- Fuse holder provides effective EMI suppression of common and differential mode
- Suitable for products that must conform to FCC and FTZ requirements
- Meets over voltage category II of IEC 664 and complies with IEC 950
- Fast-on terminals or solder lug terminals
- Metal case provides effective EMI shielding
- Operating temperature: -25°C to +85°C (including temperature rise, see graph on page PF35)

Applications

- Computers and peripheral equipment
- Electronic equipment
- Digital equipment
- Measuring and testing instruments
- Telecommunications equipment

Circuit Diagram

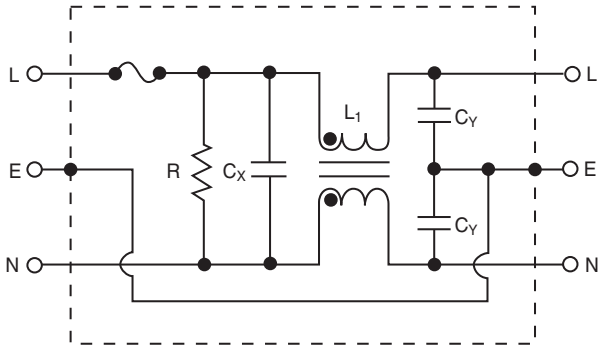

Specifications

Model*	Rated Voltage (@ 50/60Hz)	Rated Current	Leakage Current (Max.)	Capacitance C_Y	Capacitance C_X	Inductance (L_1)	Temperature Rise (Max.)
64-XXX-020-3-11	250VAC	2A	0.35mA	2200pF ± 20%	0.1uF	6.5mH	40°C
64-XXX-020-5-11			0.50mA	3300pF ± 20%			
64-XXX-020-3-12			0.35mA	2200pF ± 20%	0.22uF		
64-XXX-020-5-12			0.50mA	3300pF ± 20%			
64-XXX-040-3-11	250VAC	4A	0.35mA	2200pF ± 20%	0.1uF	4.2mH	45°C
64-XXX-040-5-11			0.50mA	3300pF ± 20%			
64-XXX-040-3-12			0.35mA	2200pF ± 20%	0.22uF		
64-XXX-040-5-12			0.50mA	3300pF ± 20%			
64-XXX-060-3-11	250VAC	6A	0.35mA	2200pF ± 20%	0.1uF	1.6mH	45°C
64-XXX-060-5-11			0.50mA	3300pF ± 20%			
64-XXX-060-3-12			0.35mA	2200pF ± 20%	0.22uF		
64-XXX-060-5-12			0.50mA	3300pF ± 20%			
65-XXX-020-3-11	125VAC	2A	0.20mA	2200pF ± 20%	0.1uF	6.5mH	40°C
65-XXX-020-5-11			0.25mA	3300pF ± 20%			
65-XXX-020-3-12			0.20mA	2200pF ± 20%	0.22uF		
65-XXX-020-5-12			0.25mA	3300pF ± 20%			
65-XXX-040-3-11	125VAC	4A	0.20mA	2200pF ± 20%	0.1uF	4.2mH	45°C
65-XXX-040-5-11			0.25mA	3300pF ± 20%			
65-XXX-040-3-12			0.20mA	2200pF ± 20%	0.22uF		
65-XXX-040-5-12			0.25mA	3300pF ± 20%			
65-XXX-060-3-11	125VAC	6A	0.20mA	2200pF ± 20%	0.1uF	1.6mH	45°C
65-XXX-060-5-11			0.25mA	3300pF ± 20%			
65-XXX-060-3-12			0.20mA	2200pF ± 20%	0.22uF		
65-XXX-060-5-12			0.25mA	3300pF ± 20%			

Note: Test Voltage 1500VAC one minute, line to ground
Insulation Resistance: 300 MΩ min. at 500VDC
F(S) = Fast-on or (Solder lug terminals)

Voltage Drop: 1V max. at rated current
Weight: 78g
Inlet: Compatible with IEC-320

*** Substitute BFF or BFS for XXX**
BFF - Fast-on terminals
BFS - Solder lug terminals

api technologies corp.
Spectrum Control

Fused Filtered Power Entry Modules
For General Purpose Applications

64-65-BFF/64-65-BFS Series

Temperature Characteristics

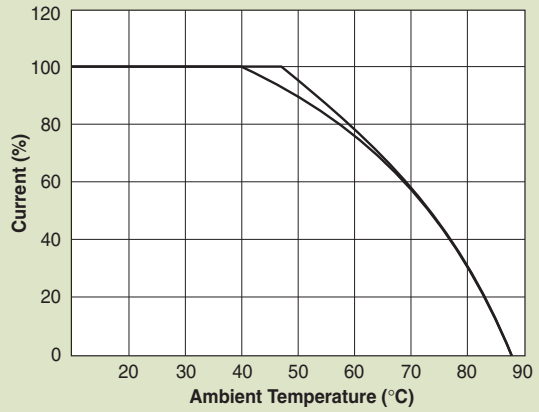

Dimensions
64/65-BFF Series

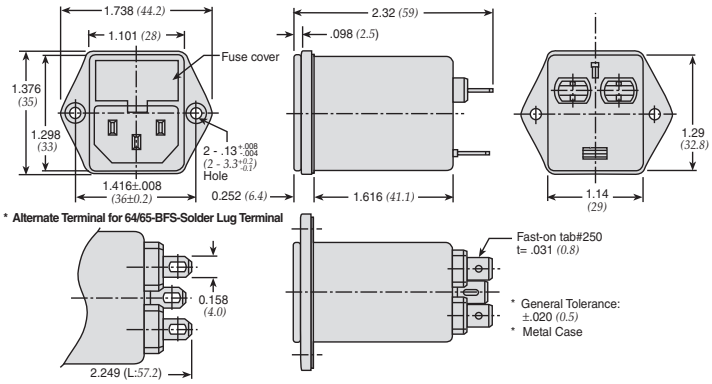

Dimensions in inches *(mm)*

Common Mode

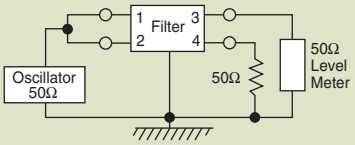

0.50 mA Leakage Versions

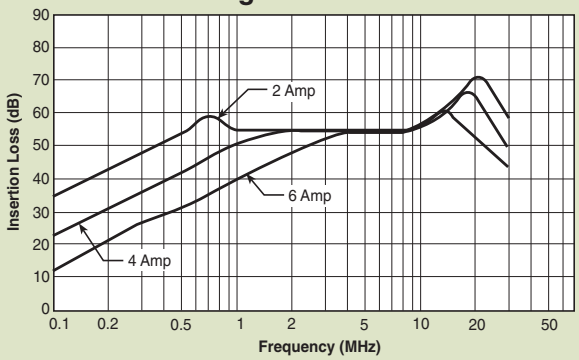

0.35 mA Leakage Versions

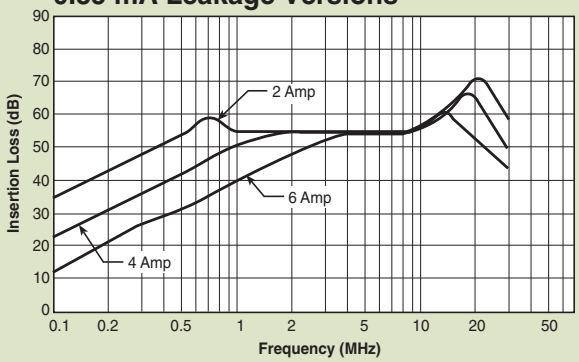

Normal Mode

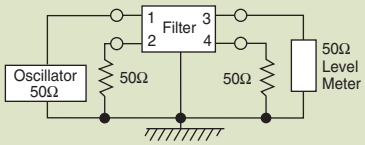

0.50 mA Leakage Versions

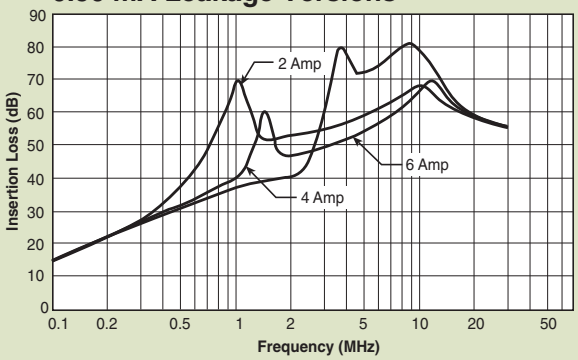

0.35 mA Leakage Versions

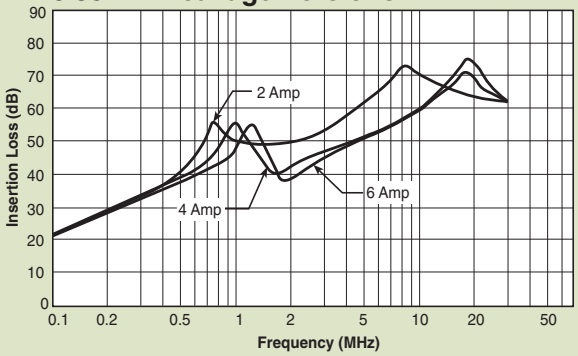

api technologies corp.
Spectrum Control

Fused Filtered Power Entry Modules
For Medical or General Purpose Applications

66-67-BFF/66-67-BFS Series

Tested and found to be IAW VDE 0565 Part 3.

Features

- Metric and North American fuse holders available
- Fuse holder provides effective EMI suppression of common and differential mode
- Suitable for products that must conform to FCC and FTZ requirements
- Meets over voltage category II of IEC 664 and complies with IEC 950
- Fast-on terminations or solder lug terminations
- Metal case provides effective EMI shielding
- Provides susceptibility protection without the leakage current associated with line-to-ground capacitance
- Reduces the line to ground capacitance in order to meet patient care requirements
- Operating temperature: -25°C to +85°C (including temperature rise, see graph on page PF37)

Applications

- Medical equipment
- Electronic equipment
- Digital equipment
- Industrial equipment
- Telecommunications equipment
- Measuring and testing instruments
- Personal computers and peripherals

Circuit Diagrams

66/67-BFF(S)-XXX-1-X Filter

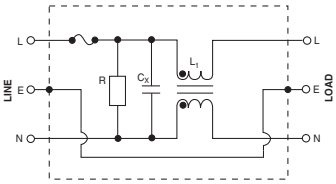

66/67-BFF(S)-XXX-0-X and 66/67-BFF(S)-XXX-4-X Filters

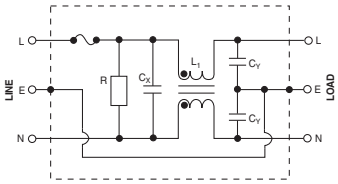

Specifications

Model*	Rated Voltage (@ 50/60Hz)	Rated Current	Leakage Current (Max.)	Capacitance C_Y	Capacitance C_X	Inductance (L_1)	Temperature Rise (Max.)
66-XXX-020-1-11	250VAC	2A	0.01mA	none	0.1uF	6.5mH	40°C
66-XXX-020-1-12					0.22uF		
66-XXX-020-0-11			0.075mA	330pF ± 20%	0.1uF		
66-XXX-020-4-11			0.1mA	470pF ± 20%			
66-XXX-020-0-12			0.075mA	330pF ± 20%	0.22uF		
66-XXX-020-4-12			0.1mA	470pF ± 20%			
66-XXX-040-1-11	250VAC	4A	0.01mA	none	0.1uF	2.4mH	45°C
66-XXX-040-1-12					0.22uF		
66-XXX-040-0-11			0.075mA	330pF ± 20%	0.1uF		
66-XXX-040-4-11			0.1mA	470pF ± 20%			
66-XXX-040-0-12			0.075mA	330pF ± 20%	0.22uF		
66-XXX-040-4-12			0.1mA	470pF ± 20%			
66-XXX-060-1-11	250VAC	6A	0.01mA	none	0.1uF	1.6mH	45°C
66-XXX-060-1-12					0.22uF		
66-XXX-060-0-11			0.075mA	330pF ± 20%	0.1uF		
66-XXX-060-4-11			0.1mA	470pF ± 20%			
66-XXX-060-0-12			0.075mA	330pF ± 20%	0.22uF		
66-XXX-060-4-12			0.1mA	470pF ± 20%			
67-XXX-020-1-11	125VAC	2A	0.005mA	none	0.1uF	6.5mH	40°C
67-XXX-020-1-12					0.22uF		
67-XXX-020-0-11			0.035mA	330pF ± 20%	0.1uF		
67-XXX-020-4-11			0.05mA	470pF ± 20%			
67-XXX-020-0-12			0.035mA	330pF ± 20%	0.22uF		
67-XXX-020-4-12			0.05mA	470pF ± 20%			
67-XXX-040-1-11	125VAC	4A	0.005mA	none	0.1uF	2.4mH	45°C
67-XXX-040-1-12					0.22uF		
67-XXX-040-0-11			0.035mA	330pF ± 20%	0.1uF		
67-XXX-040-4-11			0.05mA	470pF ± 20%			
67-XXX-040-0-12			0.035mA	330pF ± 20%	0.22uF		
67-XXX-040-4-12			0.05mA	470pF ± 20%			
67-XXX-060-1-11	125VAC	6A	0.005mA	none	0.1uF	1.6mH	45°C
67-XXX-060-1-12					0.22uF		
67-XXX-060-0-11			0.035mA	330pF ± 20%	0.1uF		
67-XXX-060-4-11			0.05mA	470pF ± 20%			
67-XXX-060-0-12			0.035mA	330pF ± 20%	0.22uF		
67-XXX-060-4-12			0.05mA	470pF ± 20%			

Note: Test Voltage 1500VAC one minute, line to ground
Insulation Resistance: 300 MΩ min. at 500VDC
F(S) = Fast-on or (Solder lug terminals)

Voltage Drop: 1V max. at rated current
Weight: 78g
Inlet: Compatible with IEC-320

*** Substitute BFF or BFS for XXX**
BFF - Fast-on terminals
BFS - Solder lug terminals

API TECHNOLOGIES • 8061 Avonia Rd. • Fairview, PA 16415 • Ph: 814-474-1571 • Fax: 814-474-3110 • eis.apitech.com
API TECHNOLOGIES' SPECTRUM CONTROL GmbH • Hansastrasse 6 • 91126 Schwabach, Germany • Phone: (49)-9122-795-0 • Fax: (49)-9122-795-58

Fused Filtered Power Entry Modules

For Medical or General Purpose Applications

66-67-BFF/66-67-BFS Series

Temperature Characteristics

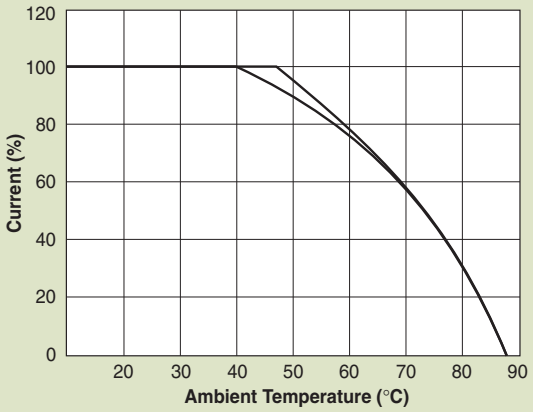

Dimensions

66-67-BFF/66-67-BFS Series

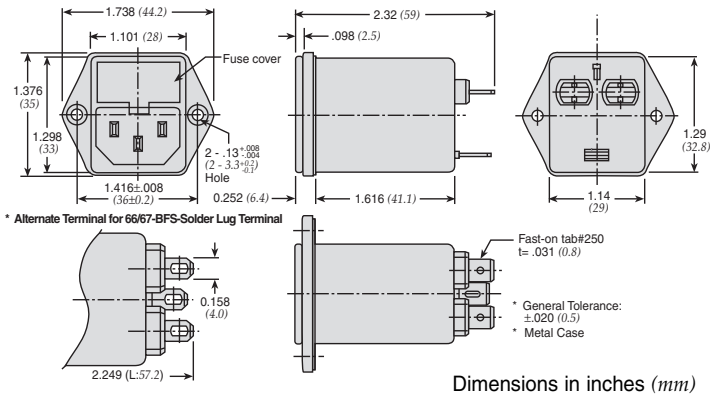

Dimensions in inches *(mm)*

Common Mode

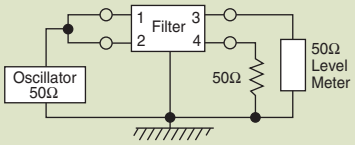

0.01 mA Leakage Current

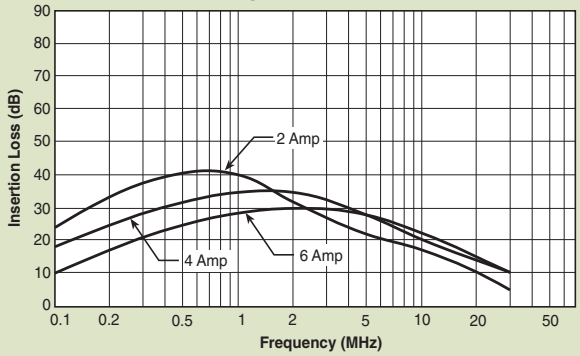

0.075 and 0.1 mA Leakage Current

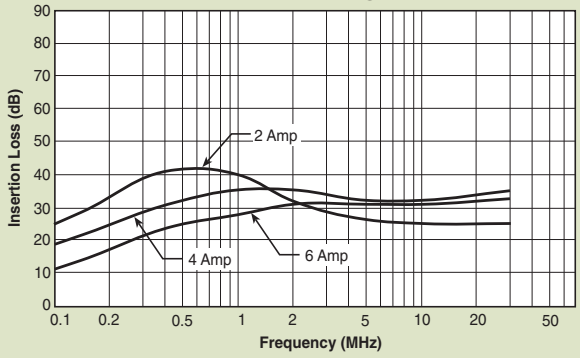

Normal Mode

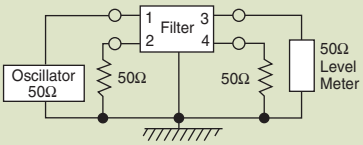

0.01 mA Leakage Current

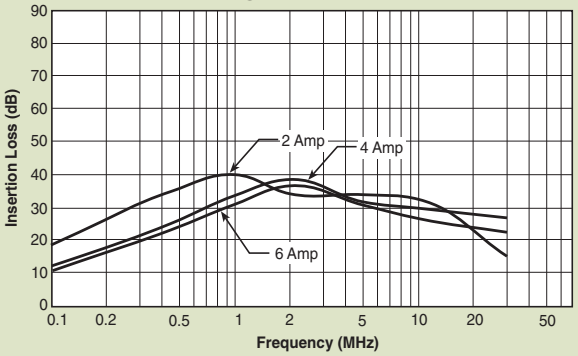

0.075 and 0.1 mA Leakage Current

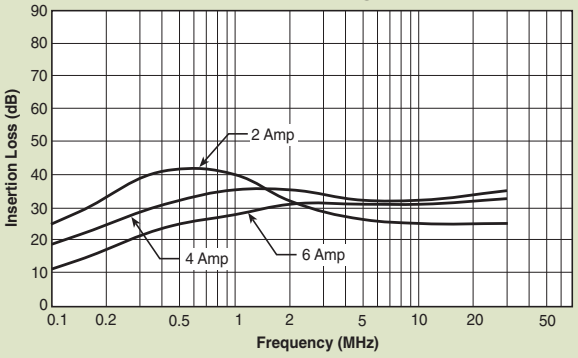

api technologies corp.
Spectrum Control

Switched and Fused Filtered Power Entry Modules

For General Purpose Applications

64-65-BSF/64-65-SSF Series

Tested and found to be IAW VDE 0565 Part 3.

Features

- North American and Metric fuse holders available
- Fuse holder and double pole power ON/OFF switch provided in a convenient/compact package
- Suitable for products that must conform to FCC and FTZ requirements
- Meets over voltage category II of IEC 664 and complies with IEC 950
- Metal case provides effective EMI shielding
- Easy access fuse drawer with space for spare fuse
- Flange-mounted or snap-in styles available for quick mounting
- Operating temperature: -25°C to +85°C (including temperature rise, see graph on page PF39)

Applications

- Computers and peripheral equipment
- Electronic equipment
- Digital equipment
- Measuring and testing instruments
- Telecommunications equipment

Circuit Diagram

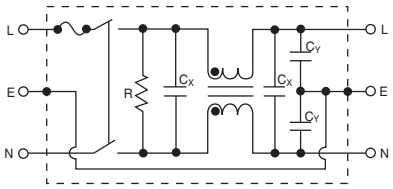

Specifications

Model*	Rated Voltage (@ 50/60Hz)	Rated Current	Leakage Current (Max.)	Capacitance C_Y	Capacitance C_{X1}	Capacitance C_{X2}	Inductance (L_1)	Temperature Rise (Max.)
64-XXX-020-3-12	250VAC	2A	0.35mA	2200pF	0.22uF	NONE	10.5mH	45°C
64-XXX-020-3-04						0.22uF		
64-XXX-020-3-14					0.47uF	NONE		
64-XXX-020-3-06						0.22uF		
64-XXX-020-5-12			0.50mA	3300pF	0.22uF	NONE		
64-XXX-020-5-04						0.22uF		
64-XXX-020-5-14					0.47uF	NONE		
64-XXX-020-5-06						0.22uF		
64-XXX-040-3-12	250VAC	4A	0.35mA	2200pF	0.22uF	NONE	4.2mH	45°C
64-XXX-040-3-04						0.22uF		
64-XXX-040-3-14					0.47uF	NONE		
64-XXX-040-3-06						0.22uF		
64-XXX-040-5-12			0.50mA	3300pF	0.22uF	NONE		
64-XXX-040-5-04						0.22uF		
64-XXX-040-5-14					0.47uF	NONE		
64-XXX-040-5-06						0.22uF		
64-XXX-060-3-12	250VAC	6A	0.35mA	2200pF	0.22uF	NONE	1.6mH	45°C
64-XXX-060-3-04						0.22uF		
64-XXX-060-3-14					0.47uF	NONE		
64-XXX-060-3-06						0.22uF		
64-XXX-060-5-12			0.50mA	3300pF	0.22uF	NONE		
64-XXX-060-5-04						0.22uF		
64-XXX-060-5-14					0.47uF	NONE		
64-XXX-060-5-06						0.22uF		
65-XXX-020-3-12	125VAC	2A	0.20mA	2200pF	0.22uF	NONE	10.5mH	45°C
65-XXX-020-3-04						0.22uF		
65-XXX-020-3-14					0.47uF	NONE		
65-XXX-020-3-06						0.22uF		
65-XXX-020-5-12			0.25mA	3300pF	0.22uF	NONE		
65-XXX-020-5-04						0.22uF		
65-XXX-020-5-14					0.47uF	NONE		
65-XXX-020-5-06						0.22uF		
65-XXX-040-3-12	125VAC	4A	0.20mA	2200pF	0.22uF	NONE	4.2mH	45°C
65-XXX-040-3-04						0.22uF		
65-XXX-040-3-14					0.47uF	NONE		
65-XXX-040-3-06						0.22uF		
65-XXX-040-5-12			0.25mA	3300pF	0.22uF	NONE		
65-XXX-040-5-04						0.22uF		
65-XXX-040-5-14					0.47uF	NONE		
65-XXX-040-5-06						0.22uF		
65-XXX-060-3-12	125VAC	6A	0.20mA	2200pF	0.22uF	NONE	1.6mH	45°C
65-XXX-060-3-04						0.22uF		
65-XXX-060-3-14					0.47uF	NONE		
65-XXX-060-3-06						0.22uF		
65-XXX-060-5-12			0.25mA	3300pF	0.22uF	NONE		
65-XXX-060-5-04						0.22uF		
65-XXX-060-5-14					0.47uF	NONE		
65-XXX-060-5-06						0.22uF		

Note: Test Voltage 1500VAC one minute, line to ground
Insulation Resistance: 300 MΩ min. at 500VDC
B(S) = Bolt-in terminals or (Snap-in terminals)

Voltage Drop: 1V max. at rated current
Weight: 130g
Inlet: Compatible with IEC-320

* **Substitute BSF or SSF for XXX**
BSF - Bolt-in switched and fused
SSF - Snap-in switched and fused

API TECHNOLOGIES • 8061 Avonia Rd. • Fairview, PA 16415 • Ph: 814-474-1571 • Fax: 814-474-3110 • eis.apitech.com
API TECHNOLOGIES' SPECTRUM CONTROL GmbH • Hansastrasse 6 • 91126 Schwabach, Germany • Phone: (49)-9122-795-0 • Fax: (49)-9122-795-58

api technologies corp.
Spectrum Control

Switched and Fused Filtered Power Entry Modules
For General Purpose Applications

Temperature Characteristics

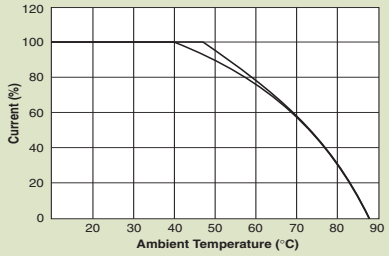

Dimensions

64/65-BSF Series

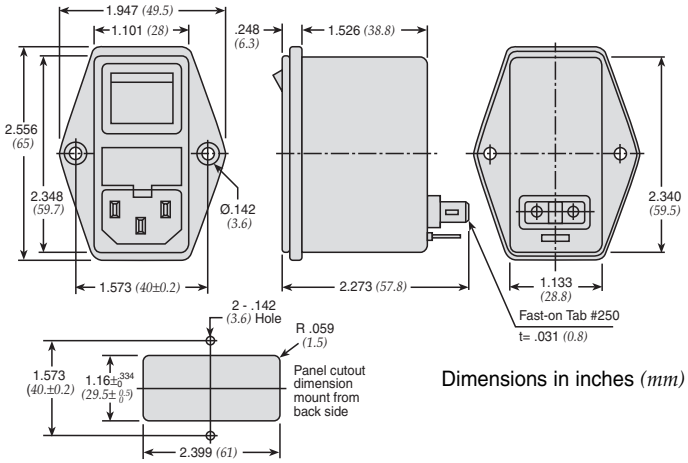

Dimensions in inches *(mm)*

64/65-SSF Series

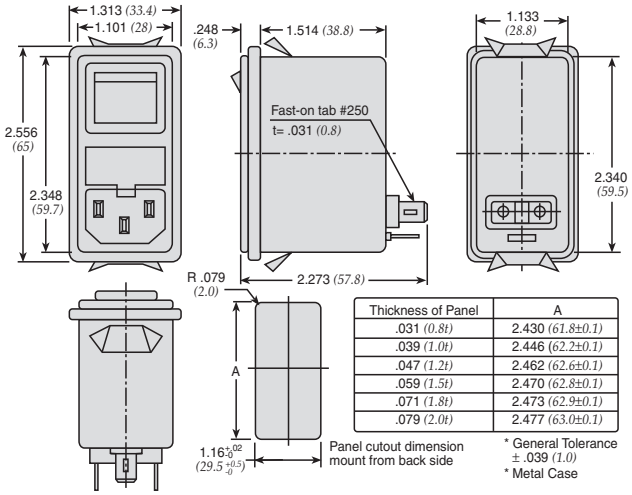

Thickness of Panel	A
.031 *(0.8t)*	2.430 *(61.8±0.1)*
.039 *(1.0t)*	2.446 *(62.2±0.1)*
.047 *(1.2t)*	2.462 *(62.6±0.1)*
.059 *(1.5t)*	2.470 *(62.8±0.1)*
.071 *(1.8t)*	2.473 *(62.9±0.1)*
.079 *(2.0t)*	2.477 *(63.0±0.1)*

* General Tolerance ± .039 *(1.0)*
* Metal Case

Common Mode

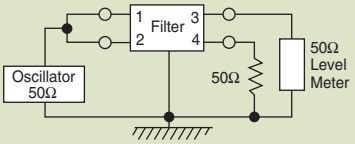

0.35 mA Leakage Versions

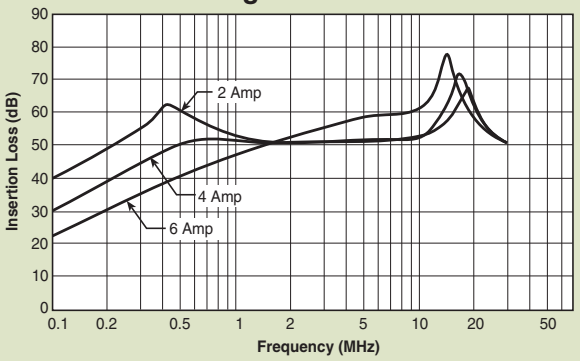

0.50 mA Leakage Versions

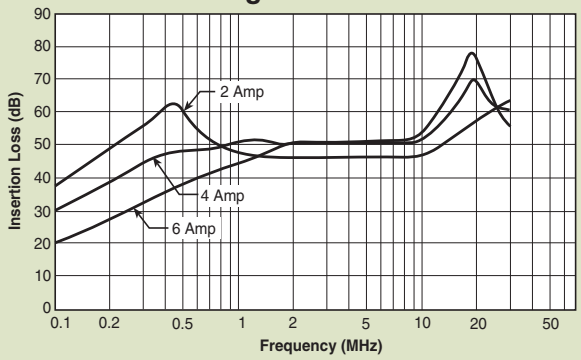

Normal Mode

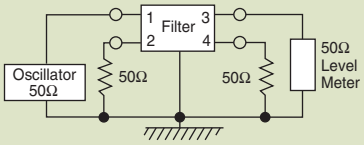

64/65-B(S)SF-*-*-02(04,06)

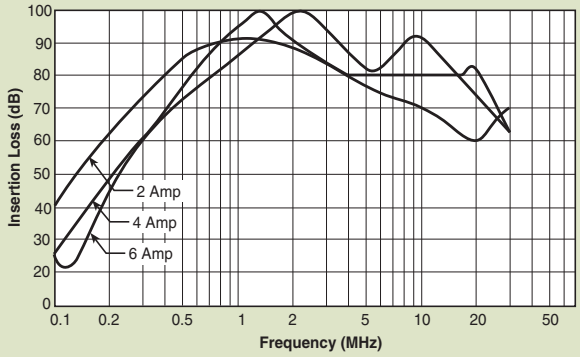

64/65-B(S)SF-*-*-11(12,14)

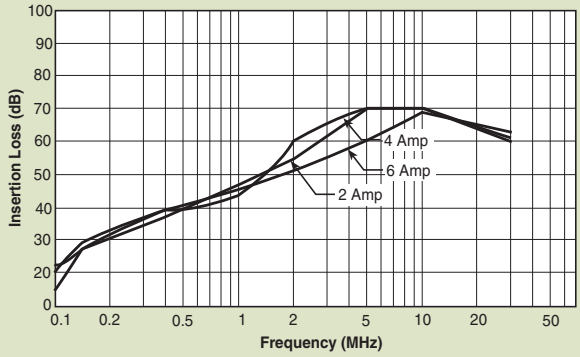

api technologies corp.
Spectrum Control

Switched and Fused Filtered Power Entry Modules

For Medical or General Purpose Applications

66-67-BSF/66-67-SSF Series

Tested and found to be IAW VDE 0565 Part 3

Features

- Metric and North American fuse holders available
- Fuse holder and a double pole power ON/OFF switch provides a convenient/compact package
- Suitable for products that must conform to FCC and FTZ requirements
- Meets over voltage category II of IEC 664 and complies with IEC 950
- Provides susceptibility protection without the leakage current associated with line-to-ground capacitors
- Designed to meet requirements for non-patient and patient care equipment
- Metal case provides effective EMI shielding
- Easy access fuse drawer - space for spare fuse
- Flange-mounted or snap-in styles available for quick mounting
- Operating temperature: -25°C to +85°C (including temperature rise, see graph on page PF41)

Applications

- Medical equipment
- Industrial equipment
- Telecommunications equipment
- Measuring and testing instruments
- Digital equipment (including switching power supplies)
- General purpose filter for susceptibility or high frequency "clean up" applications

Circuit Diagram

Note: C_{Y1} and C_{Y2} capacitors omitted on 66/67 B(S)F-XXX-1-X Filters

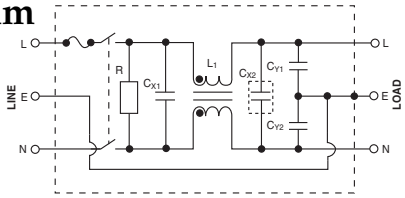

Specifications

Model*	Rated Voltage 50/60Hz	Rated Current	Leakage Current (Max.)	Capacitance C_Y	Capacitance C_{X1}	Capacitance C_{X2}	Temp. Induct. (L_1)	Rise (Max.)
66-XXX-020-0-12	250 VAC	2A	.075mA	330pF	0.22uF	NONE	10.5mH	40°C
66-XXX-020-0-04						0.22uF		
66-XXX-020-0-14					0.47uF	NONE		
66-XXX-020-0-06						0.22uF		
66-XXX-020-1-12			.01mA	NONE	0.22uF	NONE		
66-XXX-020-1-04						0.22uF		
66-XXX-020-1-14					0.47uF	NONE		
66-XXX-020-1-06						0.22uF		
66-XXX-020-4-12			0.1mA	470pF	0.22uF	NONE		
66-XXX-020-4-04						0.22uF		
66-XXX-020-4-14					0.47uF	NONE		
66-XXX-020-4-06						0.22uF		
66-XXX-040-0-12		4A	.075mA	330pF	0.22uF	NONE	4.2mH	45°C
66-XXX-040-0-04						0.22uF		
66-XXX-040-0-14					0.47uF	NONE		
66-XXX-040-0-06						0.22uF		
66-XXX-040-1-12			.01mA	NONE	0.22uF	NONE		
66-XXX-040-1-04						0.22uF		
66-XXX-040-1-14					0.47uF	NONE		
66-XXX-040-1-06						0.22uF		
66-XXX-040-4-12			.01mA	470pF	0.22uF	NONE		
66-XXX-040-4-04						0.22uF		
66-XXX-040-4-14					0.47uF	NONE		
66-XXX-040-4-06						0.22uF		
66-XXX-060-0-12		6A	.075mA	330pF	0.22uF	NONE	1.6mH	
66-XXX-060-0-04						0.22uF		
66-XXX-060-0-14					0.47uF	NONE		
66-XXX-060-0-06						0.22uF		
66-XXX-060-1-12			.01mA	NONE	0.22uF	NONE		
66-XXX-060-1-04						0.22uF		
66-XXX-060-1-14					0.47uF	NONE		
66-XXX-060-1-06						0.22uF		
66-XXX-060-4-12			0.1mA	470pF	0.22uF	NONE		
66-XXX-060-4-04						0.22uF		
66-XXX-060-4-14					0.47uF	NONE		
66-XXX-060-4-06						0.22uF		

Model*	Rated Voltage 50/60Hz	Rated Current	Leakage Current (Max.)	Capacitance C_Y	Capacitance C_{X1}	Capacitance C_{X2}	Temp. Induct. (L_1)	Rise (Max.)
67-XXX-020-0-12	125 VAC	2A	0.04mA	330pF	0.22uF	NONE	10.5mH	40°C
67-XXX-020-0-04						0.22uF		
67-XXX-020-0-14					0.47uF	NONE		
67-XXX-020-0-06						0.22uF		
67-XXX-020-1-12			.005mA	NONE	0.22uF	NONE		
67-XXX-020-1-04						0.22uF		
67-XXX-020-1-14					0.47uF	NONE		
67-XXX-020-1-06						0.22uF		
67-XXX-020-4-12			0.05mA	470pF	0.22uF	NONE		
67-XXX-020-4-04						0.22uF		
67-XXX-020-4-14					0.47uF	NONE		
67-XXX-020-4-06						0.22uF		
67-XXX-040-0-12		4A	0.04mA	330pF	0.22uF	NONE	4.2mH	45°C
67-XXX-040-0-04						0.22uF		
67-XXX-040-0-14					0.47uF	NONE		
67-XXX-040-0-06						0.22uF		
67-XXX-040-1-12			.005mA	NONE	0.22uF	NONE		
67-XXX-040-1-04						0.22uF		
67-XXX-040-1-14					0.47uF	NONE		
67-XXX-040-1-06						0.22uF		
67-XXX-040-4-12			0.05mA	470pF	0.22uF	NONE		
67-XXX-040-4-04						0.22uF		
67-XXX-040-4-14					0.47uF	NONE		
67-XXX-040-4-06						0.22uF		
67-XXX-060-0-12		6A	0.04mA	330pF	0.22uF	NONE	1.6mH	
67-XXX-060-0-04						0.22uF		
67-XXX-060-0-14					0.47uF	NONE		
67-XXX-060-0-06						0.22uF		
67-XXX-060-1-12			.005mA	NONE	0.22uF	NONE		
67-XXX-060-1-04						0.22uF		
67-XXX-060-1-14					0.47uF	NONE		
67-XXX-060-1-06						0.22uF		
67-XXX-060-4-12			0.05mA	470pF	0.22uF	NONE		
67-XXX-060-4-04						0.22uF		
67-XXX-060-4-14					0.47uF	NONE		
67-XXX-060-4-06						0.22uF		

Note: Test Voltage: 1500VAC one minute, line to ground
Insulation Resistance: 300 MΩ min. at 500VDC
Voltage Drop: 1V max. at rated current

Weight: 130g
Inlet: Compatible with IEC-320
B(S) = Bolt-in terminals or (Snap-in terminals)

*** Substitute BSF or SSF for XXX**
BSF - Bolt-In Switched and Fused
SSF - Snap-In Switched and Fused

API TECHNOLOGIES • 8061 Avonia Rd. • Fairview, PA 16415 • Ph: 814-474-1571 • Fax: 814-474-3110 • eis.apitech.com
API TECHNOLOGIES' SPECTRUM CONTROL GmbH • Hansastrasse 6 • 91126 Schwabach, Germany • Phone: (49)-9122-795-0 • Fax: (49)-9122-795-58

api technologies corp.
Spectrum Control

Switched and Fused Filtered Power Entry Modules
For Medical or General Purpose Applications

Temperature Characteristics

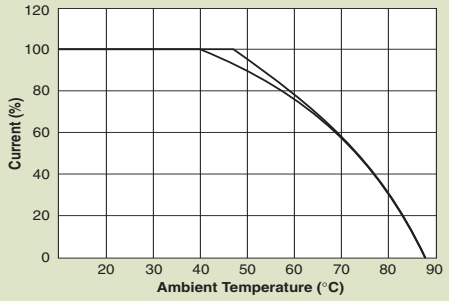

Dimensions

66/67-BSF Series

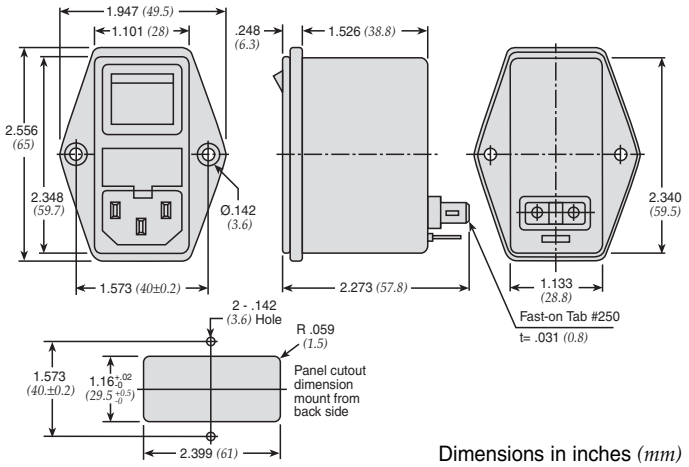

Dimensions in inches *(mm)*

66/67-SSF Series

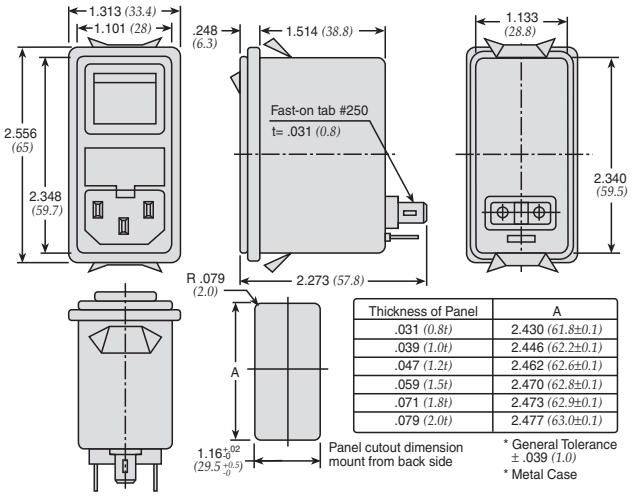

Thickness of Panel	A
.031 *(0.8t)*	2.430 *(61.8±0.1)*
.039 *(1.0t)*	2.446 *(62.2±0.1)*
.047 *(1.2t)*	2.462 *(62.6±0.1)*
.059 *(1.5t)*	2.470 *(62.8±0.1)*
.071 *(1.8t)*	2.473 *(62.9±0.1)*
.079 *(2.0t)*	2.477 *(63.0±0.1)*

* General Tolerance ± .039 *(1.0)*
* Metal Case

Common Mode

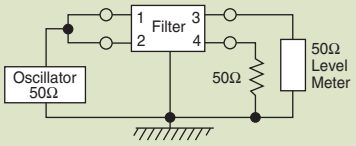

0.01 mA Leakage Current

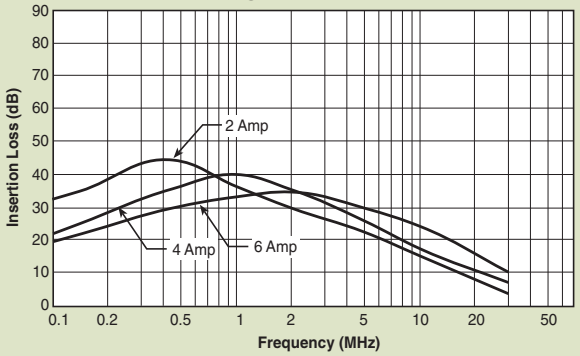

0.075 and 0.1 mA Leakage Current

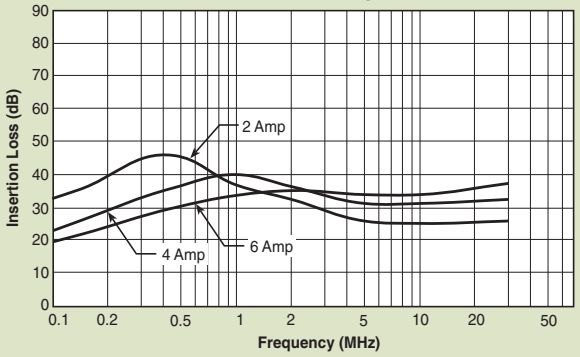

Normal Mode

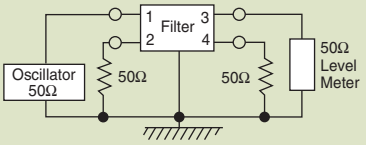

0.01 mA Leakage Current

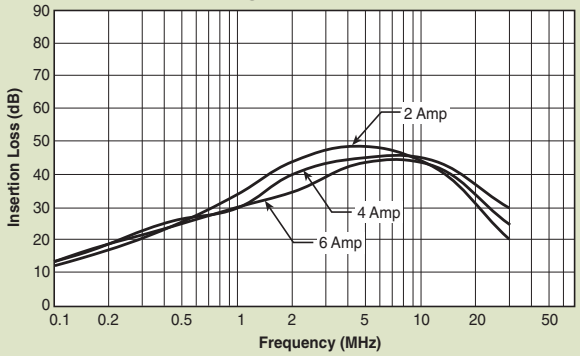

0.075 and 0.1 mA Leakage Current

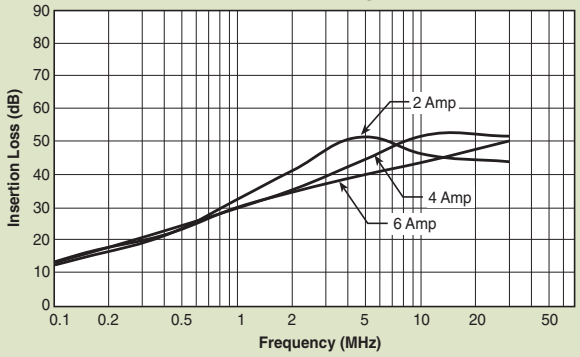

api technologies corp.
Spectrum Control

Switched and Fused Filtered Power Entry Modules

Dual Fuse for European Applications

68-BSF Series

Features

- Dual fuse for European applications
- Fuse holder and double pole power ON/OFF switch provides a convenient/compact package
- Suitable for products that must conform to FCC and FTZ requirements
- Meets over voltage category II of IEC 664 and complies with IEC 950
- Metal case provides effective EMI shielding
- IEC connector meets the safety standards of most certifying agencies
- Easy access fuse drawer
- Flange-mounted
- UL, CSA, and SEMKO approved
- Designed to be in accordance with VDE 0565, part 3
- Operating temperature: -25°C to +85°C (including temperature rise, see graph on page PF43)

Applications

- Computers and peripheral equipment
- Electronic equipment
- Digital equipment
- Measuring and testing instruments
- Telecommunications equipment

Circuit Diagram

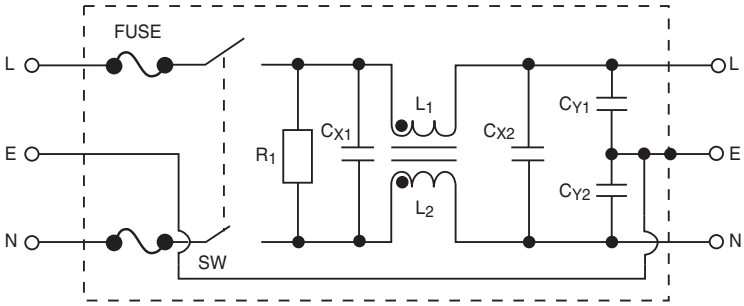

Specifications

Model	Rated Voltage (@ 50/60Hz)	Rated Current	Leakage Current (Max.)	Capacitance C_{Y1}	C_{Y2}	C_{X1}	C_{X2}	Inductance (L_1)	Temperature Rise (Max.)
68-BSF-020-3-01	250VAC	2A	0.35mA	2200pF	2200pF	0.1uF	0.1uF	10.5mH	45°C
68-BSF-020-3-04						0.22uF	0.22uF		
68-BSF-040-3-01		4A				0.1uF	0.1uF	4.2mH	
68-BSF-040-3-04						0.22uF	0.22uF		
68-BSF-060-3-01		6A				0.1uF	0.1uF	1.6mH	
68-BSF-060-3-04						0.22uF	0.22uF		

Note: Test Voltage 1500VAC one minute, line to ground
Insulation Resistance: 300 MΩ min. at 500VDC
Voltage Drop: 1V max. at rated current
Weight: 130g
Inlet: Compatible with IEC-320
B(S) = Bolt-in terminals

Switched and Fused Filtered Power Entry Modules

Dual Fuse for European Applications

68-BSF Series

Temperature Characteristics

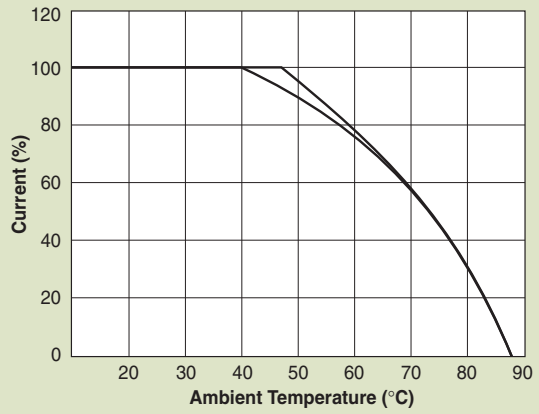

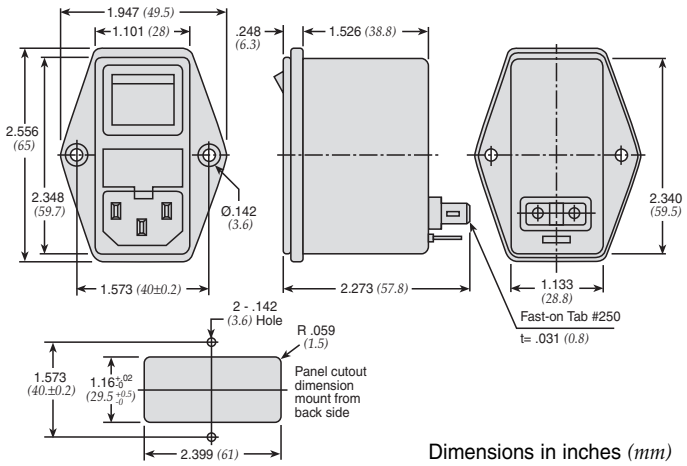

Dimensions in inches *(mm)*

Common Mode

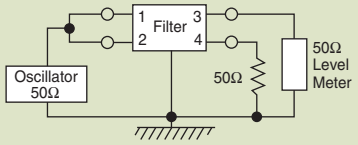

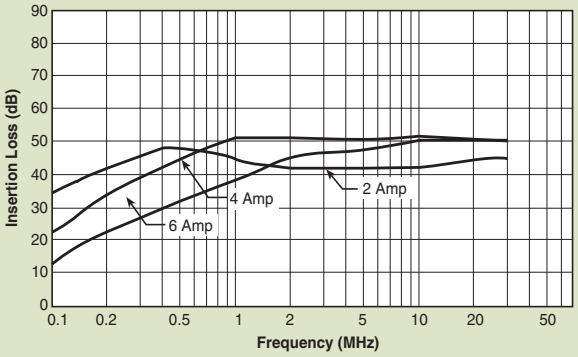

Normal Mode

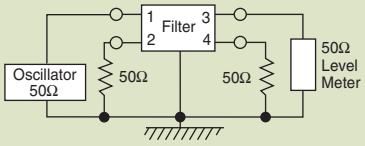

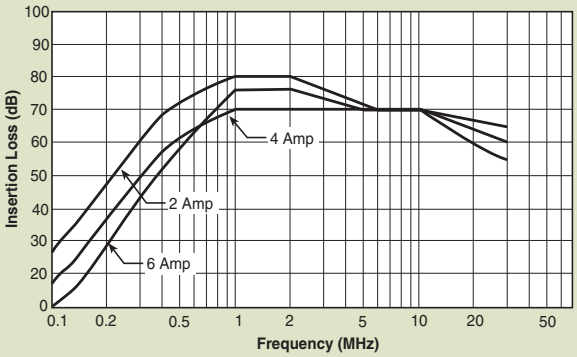

api technologies corp.
Spectrum Control

PCB Power Filters
Miniature Printed Circuit Board

61-MPC Series

Tested and found to be IAW VDE 0565 Part 3

Features

- Miniature general purpose PCB mounted filter
- Requires minimal PCB real estate space
- Low cost
- Designed for two wire cord systems
- For three wire cord systems, Y capacitors can be attached externally
- Operating temperature: -25°C to +85°C (including temperature rise, see graph on page PF45)

Applications

- Personal computers and peripherals
- Digital equipment
- Measuring instruments and medical equipment
- TV & VCR monitors and display units
- Home appliances

Circuit Diagram

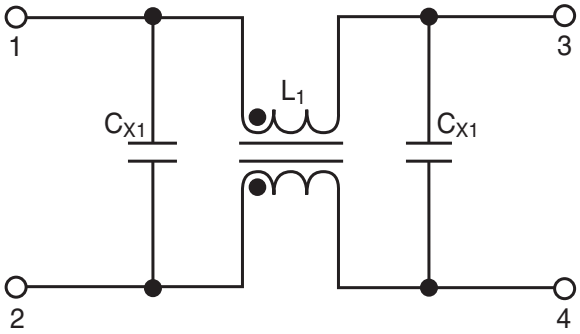

Specifications

Model	Rated Voltage (@ 50/60Hz)	Rated Current	Leakage Current (Max.)	Capacitance C_{X1}	Capacitance C_{X2}	Inductance (L_1)	Temperature Rise (Max.)
61-MPC-010-1-11	250VAC	1A	0.1mA	0.1uF	0.1uF	11mH	40°C
61-MPC-016-1-11		1.6A				6.0mH	
61-MPC-025-1-11		2.5A				2.4mH	
61-MPC-036-1-11		3.6A				1.2mH	

Note: Test voltage: 1500VAC one minute, line to ground
Insulation resistance: 300 Mohm min. at 500VDC
Voltage drop: 1V max. at rated current
Weight: 17.5g

PCB Power Filters
Miniature Printed Circuit Board

61-MPC Series

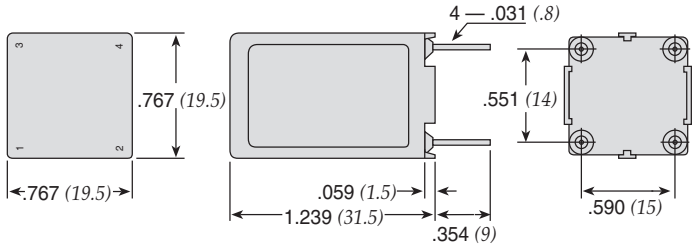

Dimensions in inches *(mm)*

Common Mode

Common mode with Y cap.
(Test circuit 1)

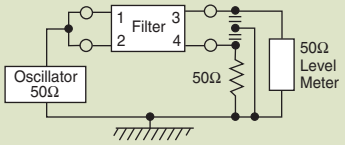

(Test circuit 2)

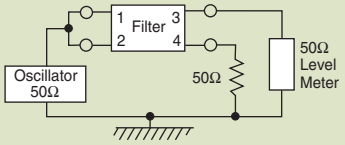

61-MPC

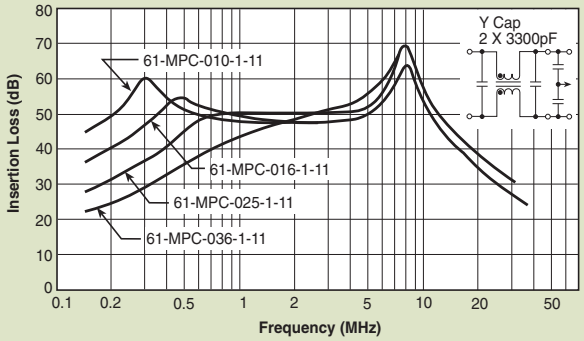

61-MPC

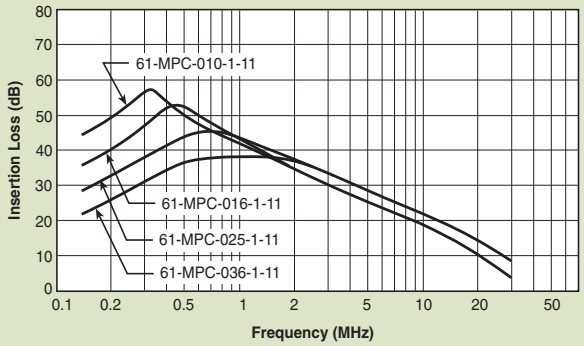

Temperature Characteristics

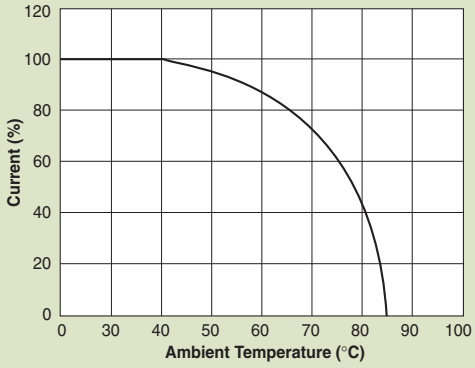

Normal Mode

(Test circuit 3)

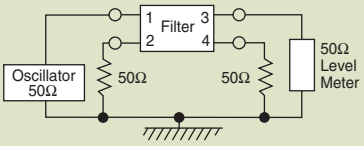

61-MPC

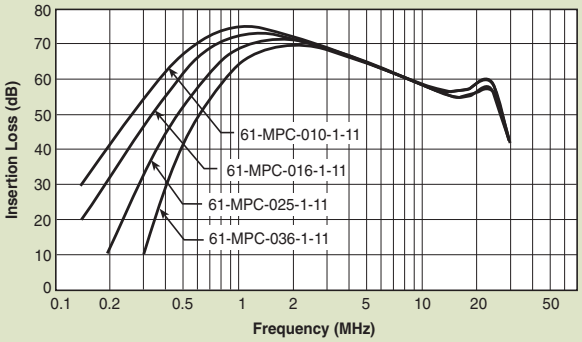

api technologies corp.
Spectrum Control

Power Entry Modules
Bolt-in Right Angle Terminals
for PCB Applications

60-BPP Series

Tested and found to be IAW VDE 0565 Part 3

Features

- Ideally suited for products that must conform to FCC part 15 regulations
- Metal case offers high performance
- Meets over voltage of IEC 664 category II and complies with IEC 950
- Uses IEC connector that meets most safety standards Solder lug, Fast-on tab styles available (see page PF18)
- PCB mounting style minimizes space and provides economical installation
- Operating temperature: -25°C to +85°C (including temperature rise, see graph on page PF47)
- UL approved low leakage version also available

Applications

- Digital equipment
- Personal computers and peripherals
- Measuring instruments
- Monitor and display units

Circuit Diagram

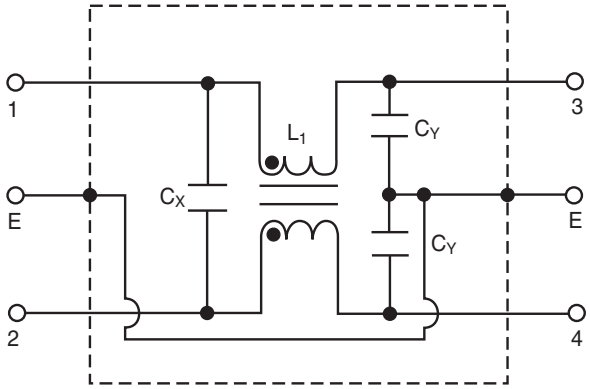

Specifications

Model	Rated Voltage (@ 50/60Hz)	Rated Current	Leakage Current (Max.)	Capacitance C_Y	Capacitance C_X	Inductance (L_1)	Temperature Rise (Max.)
60-BPP-010-3-2	250VAC	1A	0.35mA	2200pF	0.022uF	6.0mH	30°C
60-BPP-010-3-4					0.047uF		
60-BPP-010-5-2			0.50mA	3300pF	0.022uF		
60-BPP-010-5-4					0.047uF		
60-BPP-020-3-2		2A	0.35mA	2200pF	0.022uF	2.4mH	
60-BPP-020-3-4					0.047uF		
60-BPP-020-5-2			0.50mA	3300pF	0.022uF		
60-BPP-020-5-4					0.047uF		
60-BPP-030-3-2		3A	0.35mA	2200pF	0.022uF	1.2mH	
60-BPP-030-3-4					0.047uF		
60-BPP-030-5-2			0.50mA	3300pF	0.022uF		
60-BPP-030-5-4					0.047uF		
60-BPP-060-3-2		6A	0.35mA	2200pF	0.022uF	0.53mH	45°C
60-BPP-060-3-4					0.047uF		
60-BPP-060-5-2			0.50mA	3300pF	0.022uF		
60-BPP-060-5-4					0.047uF		

Note: Test voltage: 1500VAC one minute, line to ground
Insulation resistance: 300 Mohm min. at 500VDC
Voltage drop: 1V max. at rated current
Weight: 50g
Input: Compatible with IEC-320

Power Entry Modules
Bolt-in Right Angle Terminals
for PCB Applications

60-BPP Series

Temperature Characteristics

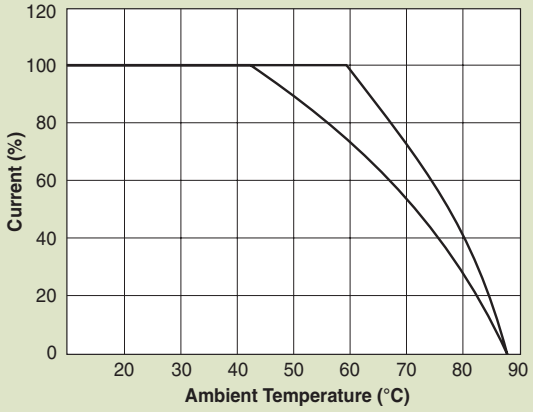

60-BPP PCB Mounting Type

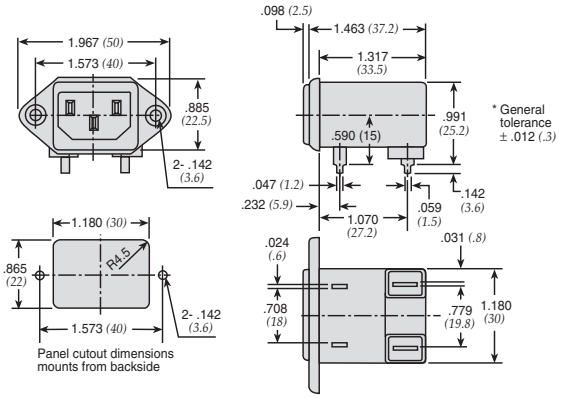

Dimensions in inches *(mm)*

Common Mode

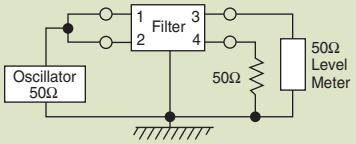

60-BPP-010;-020

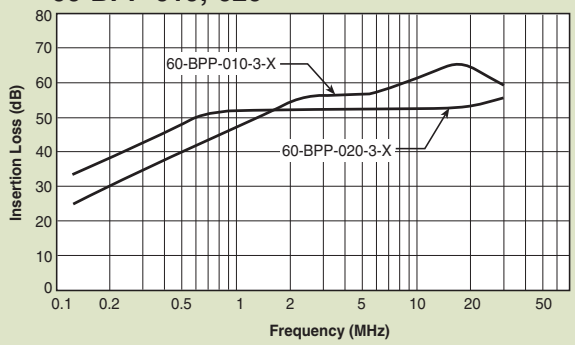

60-BPP-030;-060

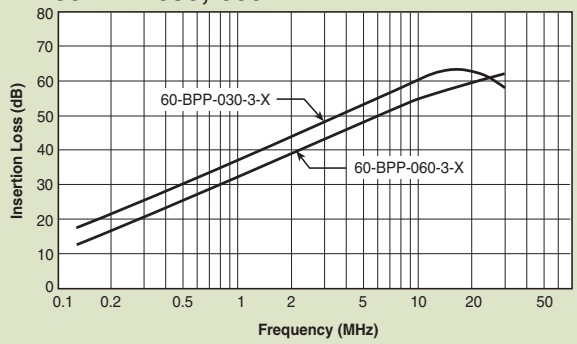

Normal Mode

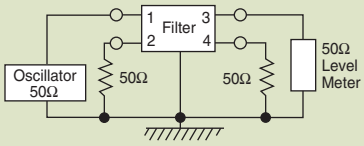

60-BPP-010;-020

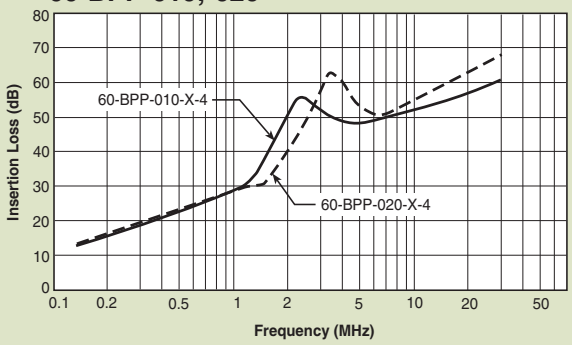

60-BPP-030;-060

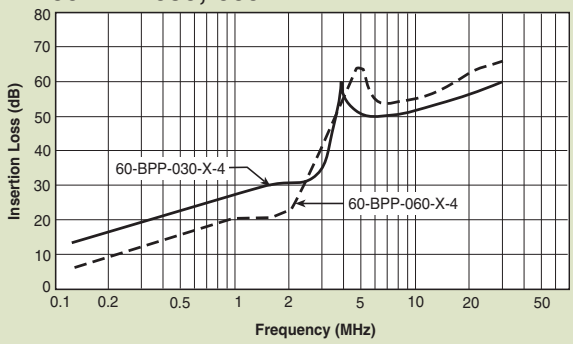

api technologies corp.
Spectrum Control

Power Entry Modules High Frequency Attenuation

Bolt-in for PCB Applications

60-BHP Series

Tested and found to be IAW VDE 0565 Part 3

Features

- Ideally suited for products that must conform to FCC part 15 regulations
- Metal cased filter offers high performance
- Meets over voltage of IEC 664 category II and complies with IEC 950
- Solder lug, Fast-on tab styles available (see page PF20)
- PCB mounting minimizes space and provides economical installation
- Excellent filtering characteristics for high frequencies
- Earth coil standard
- Operating temperature: -25°C to +85°C (including temperature rise, see graph on page PF49)

Applications

- Digital equipment
- Personal computers and peripherals
- Measuring instruments
- Monitor and display units

Circuit Diagram

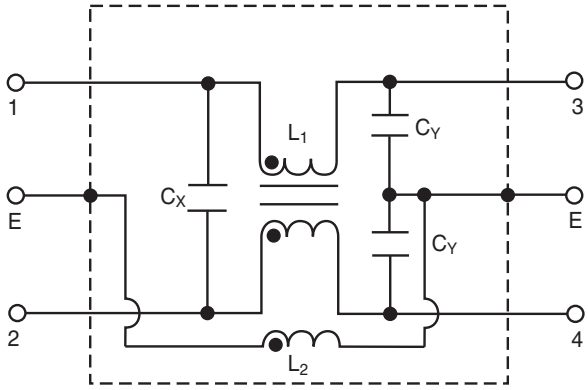

Specifications

Model	Rated Voltage (@ 50/60Hz)	Rated Current	Leakage Current (Max.)	Capacitance C_Y	Capacitance C_X	Inductance (L_1)	Inductance (L_2)	Temperature Rise (Max.)
60-BHP-010-3-11	250VAC	1A	0.35mA	2200pF±20%	0.1uF±20%	6mH	18.3 uH	30°C
60-BHP-010-3-4					.047uF±20%			
60-BHP-010-5-11			0.50mA	3300pF±20%	0.1uF±20%			
60-BHP-010-5-4					.047uF±20%			
60-BHP-020-3-11		2A	0.35mA	2200pF±20%	0.1uF±20%	2.4mH		
60-BHP-020-3-4					.047uF±20%			
60-BHP-020-5-11			0.50mA	3300pF±20%	0.1uF±20%			
60-BHP-020-5-4					.047uF±20%			
60-BHP-030-3-11		3A	0.35mA	2200pF±20%	0.1uF±20%	1.2mH		
60-BHP-030-3-4					.047uF±20%			
60-BHP-030-5-11			0.50mA	3300pF±20%	0.1uF±20%			
60-BHP-030-5-4					.047uF±20%			
60-BHP-060-3-11		6A	0.35mA	2200pF±20%	0.1uF±20%	0.53mH		45°C
60-BHP-060-3-4					.047uF±20%			
60-BHP-060-5-11			0.50mA	3300pF±20%	0.1uF±20%			
60-BHP-060-5-4					.047uF±20%			

Note: Test voltage: 1500VAC one minute, line to ground
Insulation resistance: 300 Mohm min. at 500VDC
Voltage drop: 1V max. at rated current
Weight: 50g
Input: Compatible with IEC-320

api technologies corp.
Spectrum Control

Power Entry Modules
High Frequency Attenuation

Bolt-in for PCB Applications

60-BHP Series

Temperature Characteristics

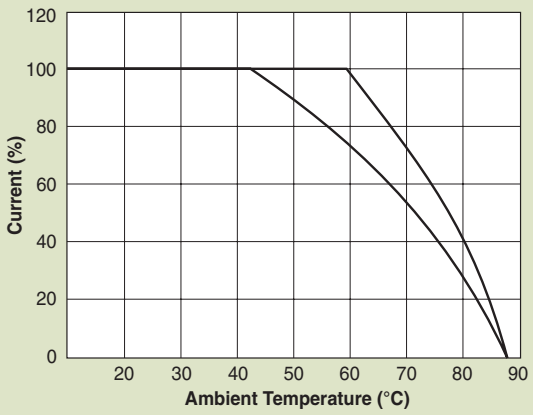

60-BHP PCB Mounting Type

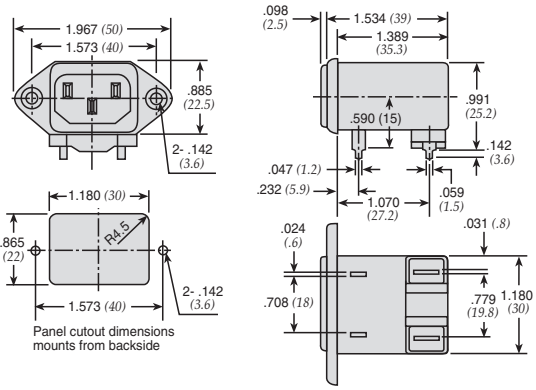

Dimensions in inches *(mm)*

Common Mode

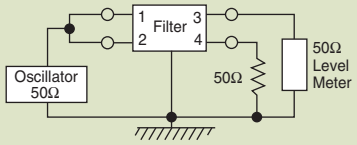

60-BHP-XXX-X-11

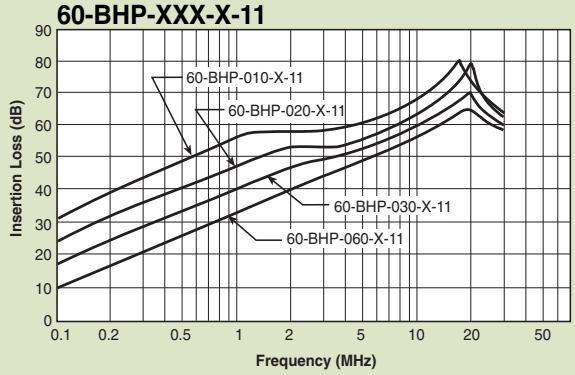

60-BHP-XXX-X-4

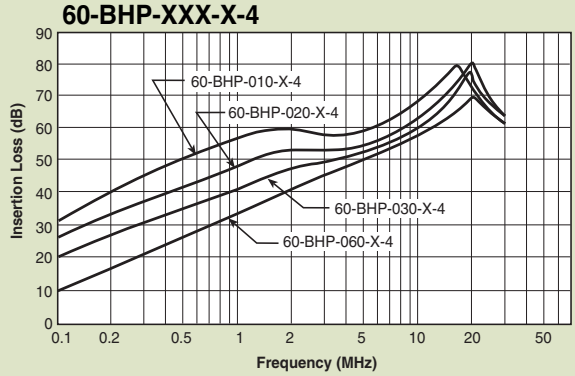

Normal Mode

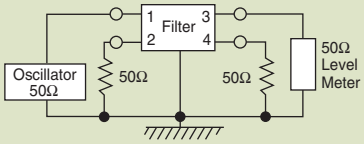

60-BHP-XXX-3-11

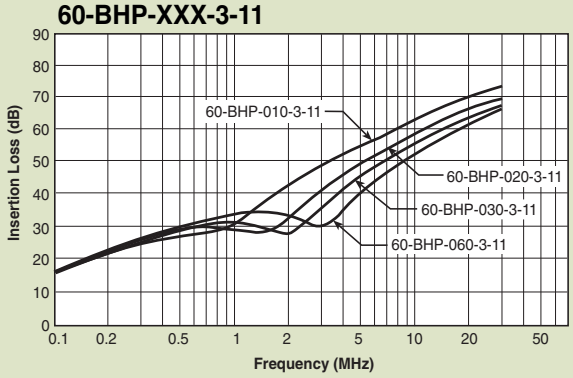

60-BHP-XXX-3-4

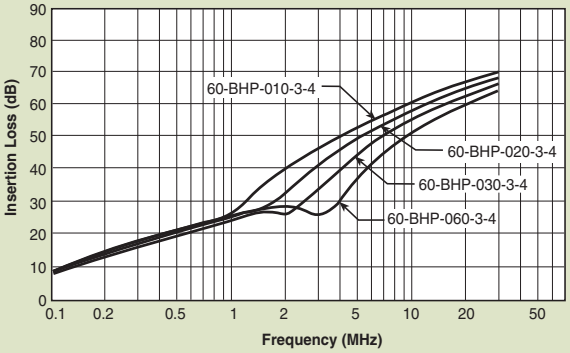

Компания «ЭлектроПласт» предлагает заключение долгосрочных отношений при поставках импортных электронных компонентов на взаимовыгодных условиях!

Наши преимущества:

- Оперативные поставки широкого спектра электронных компонентов отечественного и импортного производства напрямую от производителей и с крупнейших мировых складов;
- Поставка более 17-ти миллионов наименований электронных компонентов;
- Поставка сложных, дефицитных, либо снятых с производства позиций;
- Оперативные сроки поставки под заказ (от 5 рабочих дней);
- Экспресс доставка в любую точку России;
- Техническая поддержка проекта, помощь в подборе аналогов, поставка прототипов;
- Система менеджмента качества сертифицирована по Международному стандарту ISO 9001;
- Лицензия ФСБ на осуществление работ с использованием сведений, составляющих государственную тайну;
- Поставка специализированных компонентов (Xilinx, Altera, Analog Devices, Intersil, Interpoint, Microsemi, Aeroflex, Peregrine, Syfer, Eurofarad, Texas Instrument, Miteq, Cobham, E2V, MA-COM, Hittite, Mini-Circuits,General Dynamics и др.);

Помимо этого, одним из направлений компании «ЭлектроПласт» является направление «Источники питания». Мы предлагаем Вам помощь Конструкторского отдела:

- Подбор оптимального решения, техническое обоснование при выборе компонента;
- Подбор аналогов;
- Консультации по применению компонента;
- Поставка образцов и прототипов;
- Техническая поддержка проекта;
- Защита от снятия компонента с производства.

Как с нами связаться

Телефон: 8 (812) 309 58 32 (многоканальный)
Факс: 8 (812) 320-02-42
Электронная почта: org@eplast1.ru
Адрес: 198099, г. Санкт-Петербург, ул. Калинина, дом 2, корпус 4, литера А.