Data Sheet

ACHS-7121/7122/7123

Fully Integrated, Hall Effect-Based Linear Current Sensor IC with 3 kV_{RMS} Isolation and Low-Resistance Current Conductor

Overview

The Broadcom® ACHS-7121/7122/7123 product series is a fully integrated Hall Effect-based isolated linear current sensor device family designed for AC or DC current sensing in industrial, commercial, and communications systems. Each of the ACHS-7121/7122/7123 consists of a precise, low-offset, linear Hall circuit with a copper conduction path located near the surface of the die. Applied current flowing through this copper conduction path generates a magnetic field that the Hall IC converts into a proportional voltage. Device accuracy is optimized through the close proximity of the magnetic signal to the Hall transducer.

A precise, proportional voltage is provided by the low-offset, chopper-stabilized CMOS Hall IC, which is programmed for accuracy after packaging. The output of the device has a positive slope (>$V_{OUT(Q)}$) when an increasing current flows through the primary copper conduction path (from pins 1 and 2, to pins 3 and 4), which is the path used for current sampling.

The internal resistance of this conductive path is 0.7 mΩ typical, providing low-power loss. The terminals of the conductive path are electrically isolated from the signal leads (pins 5 through 8). This performance is delivered in a compact, surface mountable, SO-8 package that meets worldwide regulatory safety standards.

Part Number	Current Range	Sensitivity
ACHS-7121	±10A	185 mV/A
ACHS-7122	±20A	100 mV/A
ACHS-7123	±30A	66 mV/A

Features

- Wide Operating Temperature: –40ºC to 110ºC
- Primary conductor resistance: 0.7 mΩ typ.
- Sensing current range: ±10A, ±20A, and ±30A
- Output sensitivity: 66 to 185 mV/A
- Output voltage proportional to AC or DC currents
- Ratiometric output from supply voltage
- Single supply operation: 5.0V
- Low-noise analog signal path
- Device bandwidth is set via FILTER pin:
  80 kHz typ. Bandwidth with 1 nF filter capacitor
- Factory-trimmed for accuracy
- Extremely stable output offset voltage
- Near zero magnetic hysteresis
- Typical total output error of ±1.5%
- >25 kV/µs Common-Mode Transient Immunity
- Small footprint, low-profile SO-8 package
- Worldwide Safety Approval: UL, CSA:
  Isolation Voltage 3 kV_{RMS}, 1 minute

Applications

- Low-power inverter current sensing
- Motor phase and rail current sensing
- Solar inverters
- Chargers and Converters
- Switching Power Supplies

CAUTION! It is advised that normal static precautions be taken in handling and assembly of this component to prevent damage and/or degradation which may be induced by ESD. The components featured in this data sheet are not to be used in military or aerospace applications or environments.

Functional Diagram

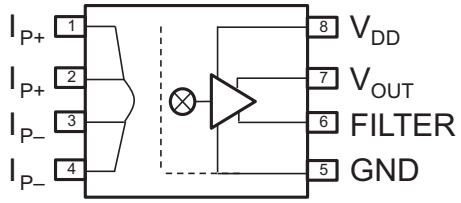

NOTE: The connection of 1 µF bypass capacitor between pins 8 and 5 is recommended.

Pin Description

Pin	Pin Name	Description
1	I_{P+}	Terminals for current being sampled; fused internally
2	I_{P+}	
3	$I_{P–}$	Terminals for current being sampled; fused internally
4	$I_{P–}$	

Pin	Pin Name	Description
8	V_{DD}	Supply voltage relative to GND
7	V_{OUT}	Output Voltage
6	FILTER	Filter pin to set bandwidth
5	GND	Output side ground

Typical Application Circuit

A typical application circuit for the ACHS-7121/7122/7123 product series consists of a bypass capacitor and a filter capacitor as additional external components. On the input side, pins 1 and 2 are shorted together and pins 3 and 4 shorted together. The output voltage is directly measured from the V_{OUT} pin.

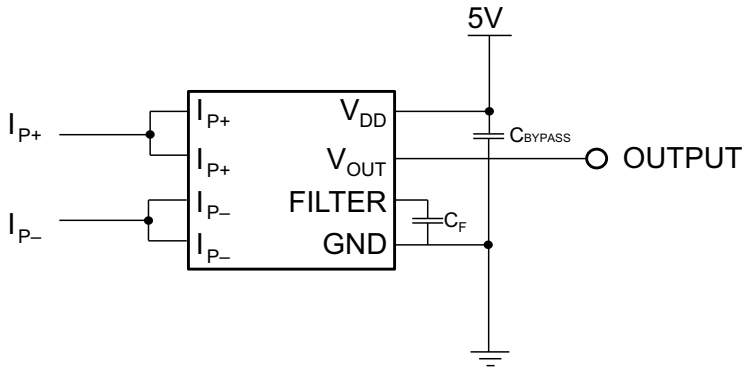

Ordering Information

Part Number	Current Range	Option (RoHS) Compliant	Package	Surface Mount	Tape and Reel	UL 3 kV_{RMS} 1 min. rating	Quantity
ACHS-7121	±10A	-000E	SO-8	X		X	100 per tube
		-500E		X	X	X	1500 per reel
ACHS-7122	±20A	-000E		X		X	100 per tube
		-500E		X	X	X	1500 per reel
ACHS-7123	±30A	-000E		X		X	100 per tube
		-500E		X	X	X	1500 per reel

To order, choose a part number from the part number column and combine with the desired option from the option column to form an order entry.

Example: Select ACHS-7122-500E to order product of ±20A, surface-mount package in tape and reel packaging and RoHS compliance. Contact your Broadcom sales representative or authorized distributor for information.

Option data sheets are available. Contact your Broadcom sales representative or authorized distributor for information.

Package Outline Drawing

ACHS-7121/7122/7123 SO-8 Package

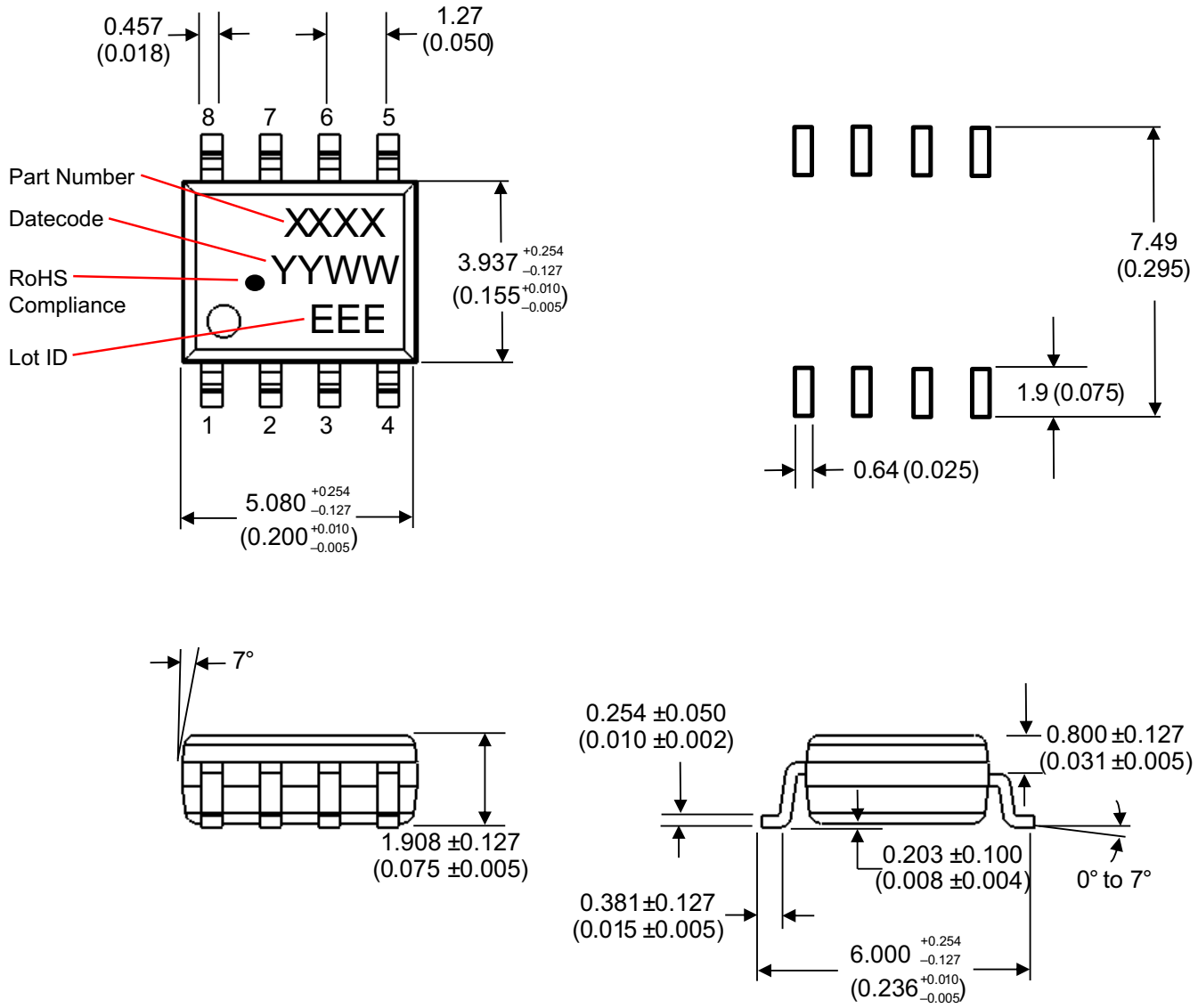

Dimensions in millimeters (inches).

NOTE:

Lead Coplanarity = 0.100 mm (0.004 inches) max.
Floating lead protrusion = 0.254 mm (0.010 inches) max.
Mold Flash on each side = 0.127 mm (0.005 inches) max.

Recommended Pb-Free IR Profile

Recommended reflow condition as per JEDEC Standard, J-STD-020 (latest revision). Non-halide flux should be used.

Regulatory Information

The ACHS-7121/7122/7123 is approved by the following organizations:

UL/cUL
UL 1577, component recognition program up to V_{ISO} = 3000V_{RMS}. Approved under CSA Component Acceptance Notice #5.

Insulation and Safety Related Specifications

Parameter	Symbol	Value	Unit	Conditions
Minimum External Air Gap (External Clearance)	L(101)	4.0	mm	Measured from input terminals to output terminals, shortest distance through air.
Minimum External Tracking (External Creepage)	L(102)	4.0	mm	Measured from input terminals to output terminals, shortest distance path along body.
Minimum Internal Plastic Gap (Internal Clearance)	—	0.05	mm	Through insulation distance, conductor to conductor, usually the direct distance between the primary input conductor and detector IC.
Tracking Resistance (Comparative Tracking Index)	CTI	>175	V	DIN IEC 112/VDE 0303 Part 1.
Isolation Group	—	IIIa	—	Material Group (DIN VDE 0110, 1/89, Table 1).

Absolute Maximum Rating

Parameter	Symbol	Min.	Max.	Unit	Test Conditions
Storage Temperature	T_S	–55	125	°C	—
Ambient Operating Temperature	T_A	–40	110	°C	—
Junction Temperature	T_J	—	150	°C	—
Primary Conductor Lead Temperature	T_L	—	150	°C	Pins 1, 2, 3, or 4
Supply Voltages	V_{DD}	–0.5	8.0	V	—
Output Voltage	V_{OUT}	–0.5	V_{DD} + 0.5	V	—
Output Current Source	$I_{OUT(source)}$	—	10	mA	T_A = 25°C
Output Current Sink	$I_{OUT(sink)}$	—	10	mA	T_A = 25°C
Overcurrent Transient Tolerance	I_P	—	100	A	1 pulse, 100 ms; T_A = 25°C
Input Power Dissipation	P_{IN}	—	900	mW	T_A = 25°C
Output Power Dissipation	P_{OUT}	—	90	mW	T_A = 25°C

Recommended Operating Conditions

Parameter		Symbol	Min.	Max.	Unit
Ambient Operating Temperature		T_A	–40	110	°C
Supply Voltage		V_{DD}	4.5	5.5	V
Output Capacitive Load		C_{LOAD}	—	10	nF
Output Resistive Load		R_{LOAD}	4.7	—	kΩ
Input Current Range	ACHS-7121	I_P	–10	10	A
	ACHS-7122		–20	20	A
	ACHS-7123		–30	30	A

Common Electrical Specifications

Unless otherwise stated, all minimum/maximum specifications are over recommended operating conditions, C_F = 1 nF. All typical values are based on T_A = 25°C, V_{DD} = 5.0V, C_F = 1 nF.

Parameter	Symbol	Min.	Typ.	Max.	Unit	Test Condition	Fig.	Note
Supply Current	I_{DD}	—	13	15	mA	V_{DD} = 5V, output open	5,6	1
Primary Conductor Resistance	$R_{PRIMARY}$	—	0.7	—	mΩ	—	—	1
Zero Current Output Voltage	$V_{OUT(Q)}$	—	$V_{DD}/2$	—	V	Bidirectional, I_P=0A	2	1
Input Filter Resistance	$R_{F(INT)}$	—	1.6	—	kΩ	—	—	1
Bandwidth	BW	—	80	—	kHz	–3 dB	—	1
Rise Time	t_r	—	4	—	µs	—	10	1
Power-on Time	t_{PO}	—	21	—	µs	—	8	1
Common Mode Transient Immunity	CMTI	25	—	—	kV/us	V_{CM} = 1000V	—	3

Electrical Specifications

ACHS-7121

Unless otherwise stated, all minimum/maximum specifications are over recommended operating conditions, C_F = 1 nF. All typical values are based on T_A = 25°C, V_{DD} = 5.0V, C_F = 1 nF.

Parameter	Symbol	Min.	Typ.	Max.	Unit	Test Conditions	Fig.	Note
Optimized Input Current Range	I_P	–10	—	10	A	—	7	4
Sensitivity	Sens	—	185	—	mV/A	$-10A \le I_P \le 10A$	1	1
Sensitivity Error	E_{SENS}	–3	—	3	%	T_A = 25°C, V_{DD} = 5V	1	1
Sensitivity Slope	ΔSens	—	–0.04	—	mV/A/°C	T_A = –40°C to 25°C	1	1
Sensitivity Slope	ΔSens	—	0.01	—	mV/A/°C	T_A = 25°C to 110°C	1	1
Zero Current Output Error	V_{OE}	–30	—	30	mV	T_A = 25°C	2	1
Zero Current Output Error Slope	ΔV_{OE}	—	–0.03	—	mV/°C	T_A = –40°C to 25°C	2	1

Parameter	Symbol	Min.	Typ.	Max.	Unit	Test Conditions	Fig.	Note
Zero Current Output Error Slope	ΔV_{OE}	—	0.06	—	mV/°C	T_A = 25°C to 110°C	2	1
Output Noise	$V_{N(RMS)}$	—	7.8	—	mV	BW = 2 kHz	9	10
Nonlinearity	NL	—	0.27	—	%	—	3	2
Total Output Error	E_{TOT}	—	±1.5	—	%	—	4	5
Sensitivity Error Lifetime Drift	E_{SENS_DRIFT}	—	±2	—	%	—	—	1
Total Output Error Lifetime Drift	E_{TOT_DRIFT}	—	±2	—	%	—	—	1

ACHS-7122

Unless otherwise stated, all minimum/maximum specifications are over recommended operating conditions, C_F = 1 nF. All typical values are based on T_A = 25°C, V_{DD} = 5.0V, C_F = 1 nF.

Parameter	Symbol	Min.	Typ.	Max.	Unit	Test Conditions	Fig.	Note
Optimized Input Current Range	I_P	–20	—	20	A	—	7	4
Sensitivity	Sens	—	100	—	mV/A	–20A ≤ I_P ≤ 20A	1	1
Sensitivity Error	E_{SENS}	–3	—	3	%	T_A = 25°C, V_{DD} = 5V	1	1
Sensitivity Slope	ΔSens	—	–0.01	—	mV/A/°C	T_A = –40°C to 25°C	1	1
Sensitivity Slope	ΔSens	—	0.01	—	mV/A/°C	T_A = 25°C to 110°C	1	1
Zero Current Output Error	V_{OE}	–25	—	25	mV	T_A = 25°C	2	1
Zero Current Output Error Slope	ΔV_{OE}	—	0.01	—	mV/°C	T_A = –40°C to 25°C	2	1
Zero Current Output Error Slope	ΔV_{OE}	—	0.02	—	mV/°C	T_A = 25°C to 110°C	2	1
Output Noise	$V_{N(RMS)}$	—	4.1	—	mV	BW = 2 kHz	9	10
Nonlinearity	NL	—	0.18	—	%	—	3	2
Total Output Error	E_{TOT}	—	±1.5	—	%	—	4	5
Sensitivity Error Lifetime Drift	E_{SENS_DRIFT}	—	±2	—	%	—	—	1
Total Output Error Lifetime Drift	E_{TOT_DRIFT}	—	±2	—	%	—	—	1

ACHS-7123

Unless otherwise stated, all minimum/maximum specifications are over recommended operating conditions, C_F = 1 nF. All typical values are based on T_A = 25°C, V_{DD} = 5.0V, C_F = 1 nF.

Parameter	Symbol	Min.	Typ.	Max.	Unit	Test Conditions	Fig.	Note
Optimized Input Current Range	I_P	–30	—	30	A	—	7	4
Sensitivity	Sens	—	66	—	mV/A	–30A ≤ I_P ≤ 30A	1	1
Sensitivity Error	E_{SENS}	–3	—	3	%	T_A = 25°C, V_{DD} = 5V	1	1
Sensitivity Slope	ΔSens	—	–0.01	—	mV/A/°C	T_A = –40°C to 25°C	1	1
Sensitivity Slope	ΔSens	—	0.01	—	mV/A/°C	T_A = 25°C to 110°C	1	1
Zero Current Output Error	V_{OE}	–20	—	20	mV	T_A = 25°C	2	1
Zero Current Output Error Slope	ΔV_{OE}	—	0.01	—	mV/°C	T_A = –40°C to 25°C	2	1
Zero Current Output Error Slope	ΔV_{OE}	—	0.02	—	mV/°C	T_A = 25°C to 110°C	2	1

Parameter	Symbol	Min.	Typ.	Max.	Unit	Test Conditions	Fig.	Note
Output Noise	$V_{N(RMS)}$	—	2.7	—	mV	BW = 2 kHz	9	10
Nonlinearity	NL	—	0.11	—	%	—	3	2
Total Output Error	E_{TOT}	—	±1.5	—	%	—	4	5
Sensitivity Error Lifetime Drift	E_{SENS_DRIFT}	—	±2	—	%	—	—	1
Total Output Error Lifetime Drift	E_{TOT_DRIFT}	—	±2	—	%	—	—	1

Package Characteristics

Parameter	Symbol	Min.	Typ.	Max.	Unit	Test Condition	Note
Input-Output Momentary Withstand Voltage	V_{ISO}	3000	—	—	V_{RMS}	RH < 50%, t = 1 min., T_A = 25°C	6, 7, 8
Resistance (Input-Output)	R_{I-O}	—	10^{14}	—	Ω	V_{I-O} = 500V_{DC}	8
Capacitance (Input-Output)	C_{I-O}	—	1.3	—	pF	f = 1 MHz	8
Junction-to-Ambient Thermal Resistance (due to Primary Conductor)	$R_{\theta 12}$	—	55	—	°C/W	Based on the Broadcom evaluation board	9
Junction-to-Ambient Thermal Resistance (due to IC)	$R_{\theta 22}$	—	27	—	°C/W	Based on the Broadcom evaluation board	9

NOTE:

1. Refer to the Definition of Electrical Characteristics in the Application Section of the data sheet.
2. Nonlinearity is defined as half of the peak-to-peak output deviation from the best-fit line, expressed as a percentage of the full-scale output voltage. See the Definition of Electrical Characteristics in the Application Section of the data sheet for the complete definition and formula.
3. Common Mode Transient Immunity is tested by applying a fast rising/falling voltage pulse across pin 4 and GND (pin 5). The output glitch observed is less than 0.2V from the average output voltage for less than 1 µs.
4. Device may be operated at higher primary current levels, I_P, provided that the Maximum Junction Temperature, $T_{J(MAX)}$ is not exceeded.
5. Total output error in percentage is the difference between the measured output voltage at maximum input current (I_{PMAX}) and the ideal output voltage at I_{PMAX} divided by the ideal output voltage at I_{PMAX}. The Total Output Error typical value is based on total output error measured at the point of product release.
6. In accordance with UL 1577, each device is proof tested by applying an insulation test voltage ≥3600V_{RMS} for 1 second.
7. The Input-Output Momentary Withstand Voltage is a dielectric voltage rating that should not be interpreted as an input-output continuous voltage rating.
8. This is a two-terminal measurement: pins 1 through 4 are shorted together and pins 5 through 8 are shorted together.
9. The Broadcom evaluation board has 300 mm^2 (total area including top and bottom copper) of 2 oz. copper connected to pins 1 and 2 and pins 3 and 4. Refer to the application section for additional information on thermal characterization.
10. Output Noise is the noise level of the ACHS-7121/7122/7123 expressed in root mean square (RMS) voltage.

Typical Performance Plots

All typical plots are based on T_A = 25°C, V_{DD} = 5V, C_F = 1 nF, unless otherwise stated.

Figure 1: Sensitivity vs. Temperature

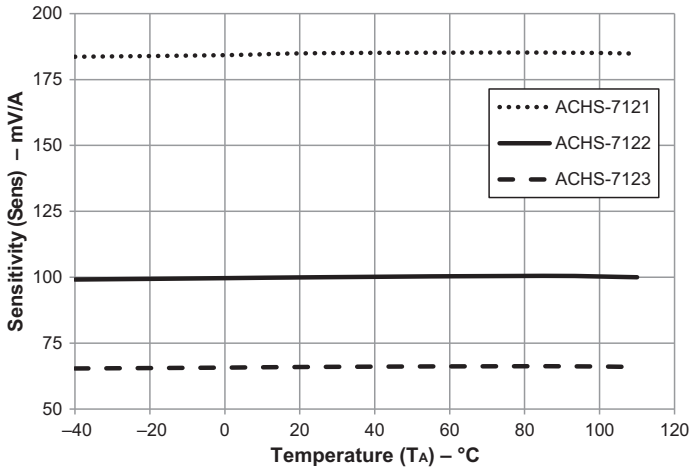

Figure 2: Zero Current Output Voltage vs. Temperature

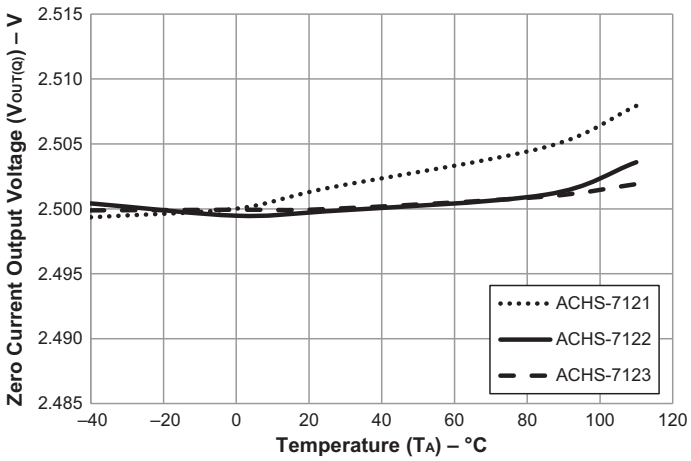

Figure 3: Nonlinearity vs. Temperature

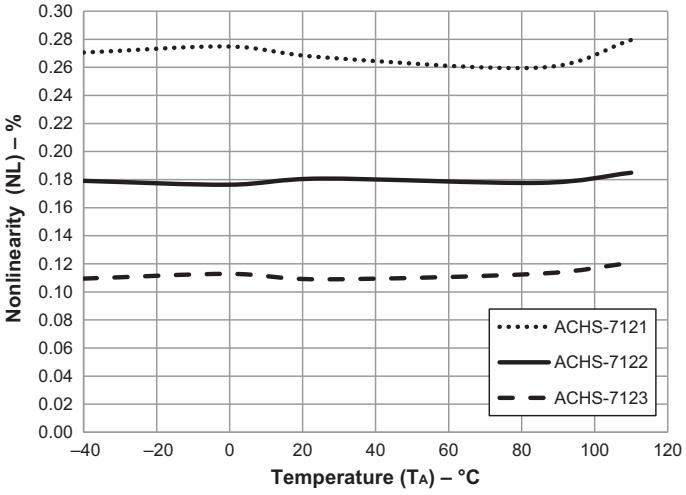

Figure 4: Total Output Error at I_{PMAX} vs. Temperature

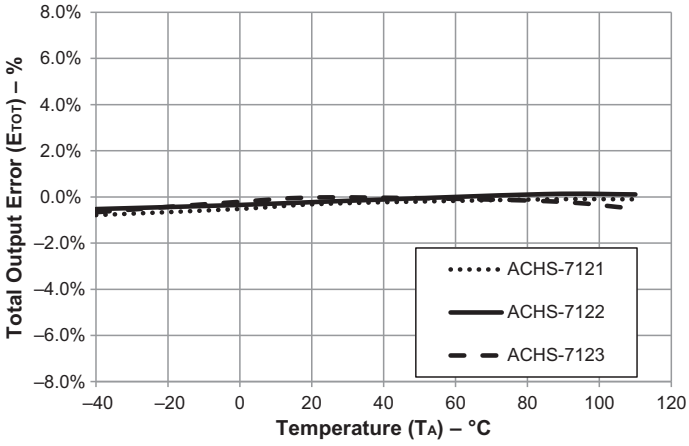

Figure 5: Supply Current vs. Temperature

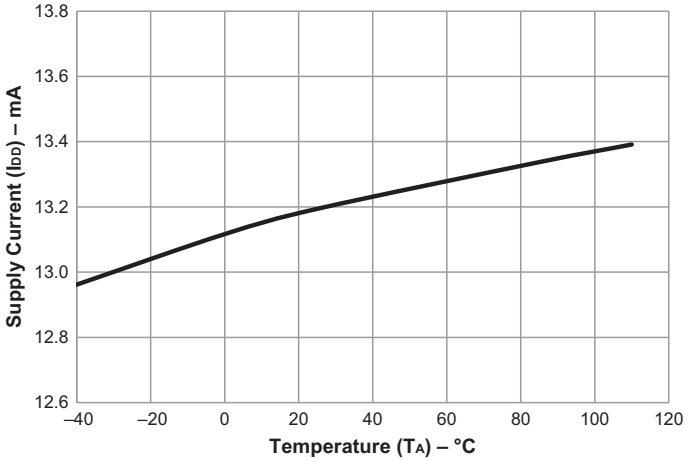

Figure 6: Supply Current vs. Supply Voltage

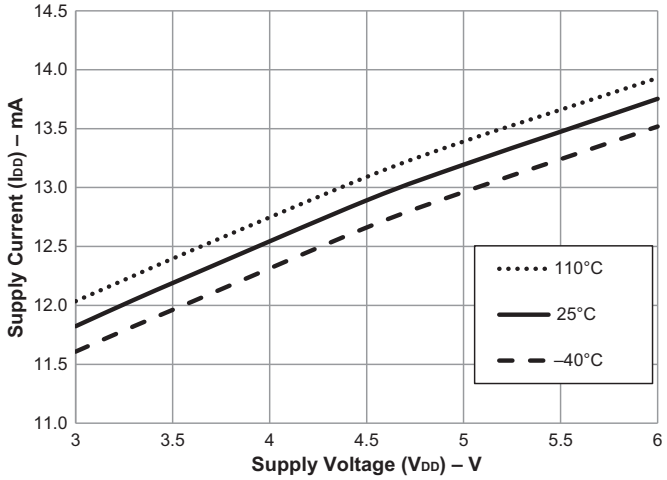

Figure 7: Output Voltage vs. Input Current

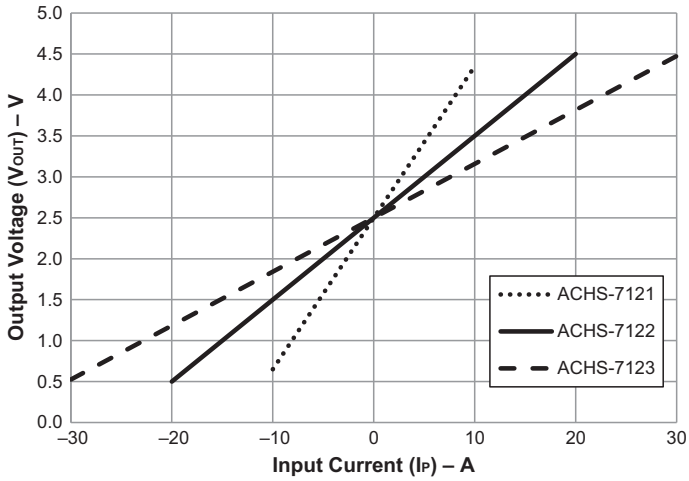

Figure 8: Power On Time vs. External Filter Capacitance

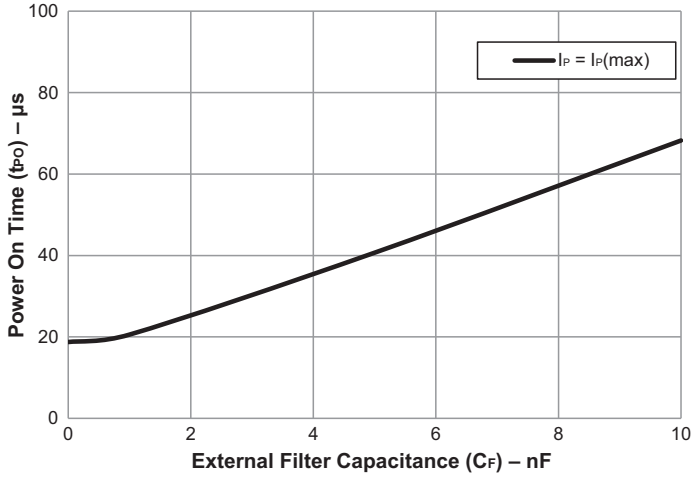

Figure 9: Output Noise vs. External Filter Capacitance

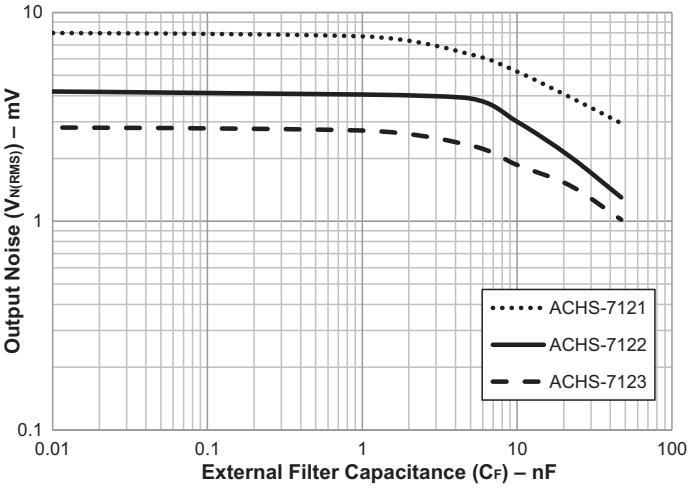

Figure 10: Rise Time vs. External Filter Capacitance

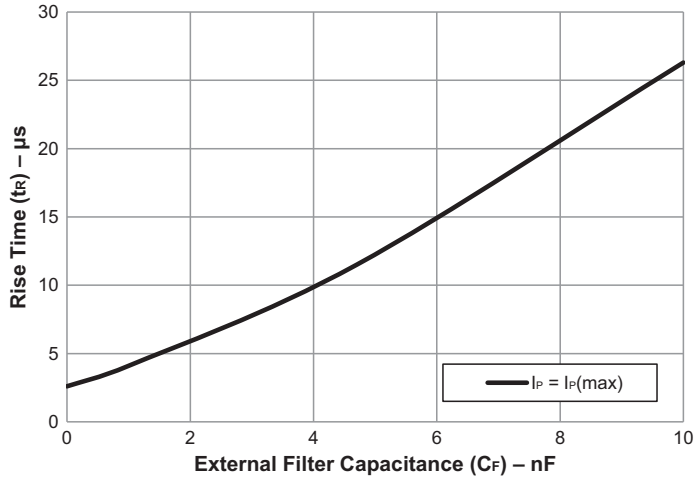

Definition of Electrical Characteristics

The ACHS-7121/7122/7123 product series is a Hall Effect current sensor that outputs an analog voltage proportional to the magnetic field intensity caused by the current flowing through the input primary conductor. Without the magnetic field, the output voltage is half of the supply voltage. The sensor can detect both DC and AC current.

Ratiometric Output

The output voltage of the ACHS-7121/7122/7123 series is ratiometric or proportional to the supply voltage. The sensitivity (Sens) of the device and the quiescent output voltage changes when there is a change in the supply voltage (V_{DD}). For example, when the V_{DD} is increased by 10% from 5V to 5.5V in the ACHS-7122, the quiescent output voltage changes from 2.5V to 2.75V and the sensitivity also changes from 100 mV/A to 110 mV/A.

Sensitivity

The output sensitivity (Sens) is the ratio of the output voltage (V_{OUT}) over the input current (I_P) flowing through the primary conductor. It is expressed in mV/A. When an applied current flows through the input primary conductor, it generates a magnetic field which the Hall IC converts into a voltage. The proportional voltage is provided by the Hall IC which is programmed in the factory for accuracy after packaging. The output voltage has a positive slope when an increasing current flows through pins 1 and 2 to pins 3 and 4. Sensitivity Error (E_{SENS}) is the difference between the measured Sensitivity and the Ideal Sensitivity expressed as a percentage (%).

Nonlinearity

Nonlinearity is defined as half of the peak-to-peak output deviation from the best-fit line (BFL), expressed as a percentage of the full-scale output voltage. The full-scale output voltage is the product of the sensitivity (Sens) and full scale input current (I_P).

$$NL(\%) = \frac{[(Max\Delta \text{ from BFL} - Min\Delta \text{ from BFL}) / 2]}{Sens \text{ X full scale } I_P} \times 100\%$$

Figure 11: Nonlinearity Calculation

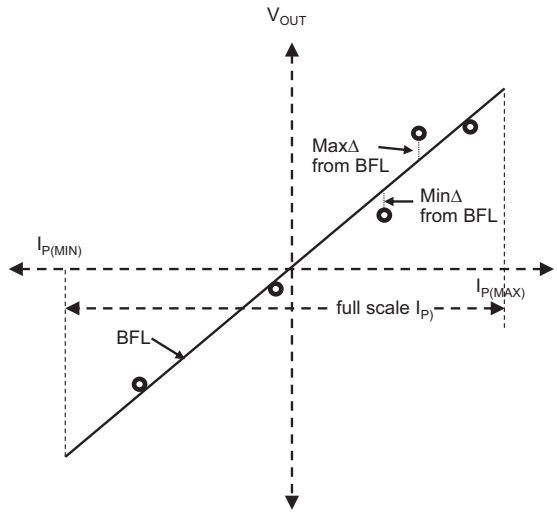

Zero Current Output Voltage

This is the output voltage of ACHS-7121/7122/7123 when the primary current is zero. Zero current output voltage is half of the supply voltage ($V_{DD}/2$).

Zero Current Output Error

This the voltage difference between the measured output voltage and the ideal output voltage ($V_{DD}/2$) when there is no input current to the device.

Total Output Error

Total output error in percentage is the difference between the measured output voltage at maximum input current (I_{PMAX}) and the ideal output voltage at I_{PMAX} divided by the ideal output voltage at I_{PMAX}.

$$E_{TOT}(\%) = \frac{Measured\ V_{OUT} @ I_{PMAX} - Ideal\ V_{OUT} @ I_{PMAX}}{Ideal\ V_{OUT} @ I_{PMAX}} \times 100\%$$

Power-On Time

This is the time required for the internal circuitry of the device to be ready during the ramping of the supply voltage. Power on time is defined as the finite time required for the output voltage to settle after the supply voltage reached its recommended operating voltage.

FILTER Pin

The ACHS-7121/7122/7123 has a FILTER pin for improving the signal-to-noise ratio of the device. This eliminates the need for an external RC filter for the V_{OUT} pin of the device, which can cause attenuation of the output signal. A ceramic capacitor, C_F, can be connected between the FILTER pin to GND.

Application Information

PCB Layout

The design of the printed circuit board (PCB) should follow good layout practices, such as keeping bypass capacitors close to the supply pin and use of ground and power planes. A bypass capacitor must be connected between pins 5 and 8 of the device. The layout of the PCB can also affect the common-mode transient immunity of the device due to stray capacitive coupling between the input and output circuits. To obtain maximum common-mode transient immunity performance, the layout of the PCB should minimize any stray coupling by maintaining the maximum possible distance between the input and output sides of the circuit and ensuring that any ground or power plane on the PCB does not pass directly below or extend much wider than the body of the device.

Land Pattern for 4 mm Board Creepage

For applications that require PCB creepage of 4 mm between input and output sides, the land pattern in Figure 12 can be used.

Figure 12: Land Pattern for 4 mm Creepage

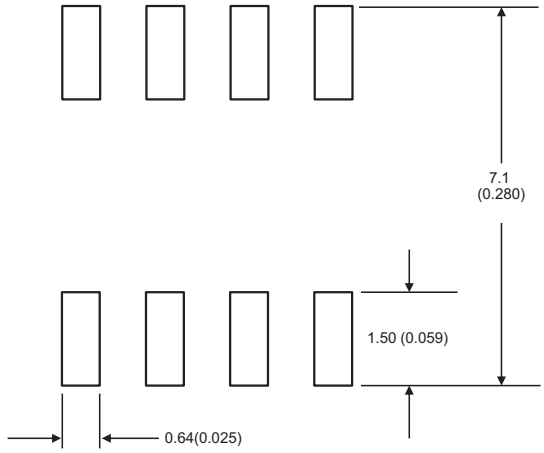

Effect of PCB Layout on Sensitivity

The trace layout on the input pins of ACHS-7121/7122/7123 affects the sensitivity. It is recommended that the PCB trace connection to the input pins covers the pins fully, as shown in Figure 13.

Figure 13: Recommended Trace Layout on Input Pins

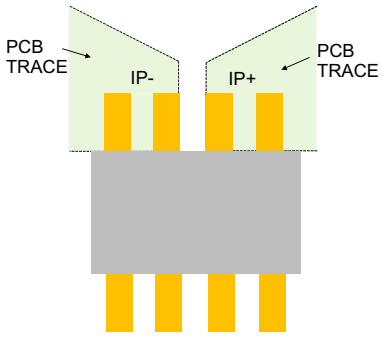

When the connection to the input pin only covers the vertical portion of the input pin, there is a sensitivity variation of about –0.6% versus recommended PCB trace layout (as shown in Figure 14).

Figure 14: Vertical Portion Connection

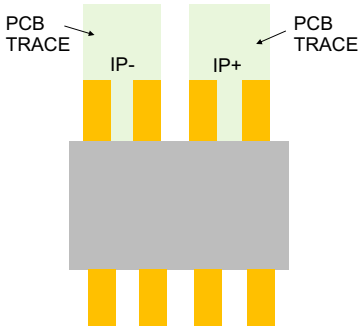

When the connection to the input pin only covers the horizontal portion of the input pin, there is a sensitivity variation of about +1.2% versus recommended PCB trace layout (as shown in Figure 15).

Figure 15: Horizontal Portion Connection

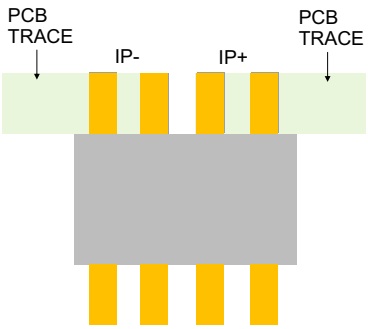

Thermal Consideration

The evaluation board used in the thermal characterization is shown in Figure 16. Inputs IP+ and IP– are each connected to input plane of 2 oz. copper with 300 mm^2 total area (including top and bottom planes). The output side GND is connected to a ground plane of 2 oz. copper with 460 mm^2 total area (including top and bottom planes). The 2 oz. copper enables the board to conduct higher current and achieve good thermal distribution in a limited space.

Figure 16: Broadcom Evaluation Board—Top Layer

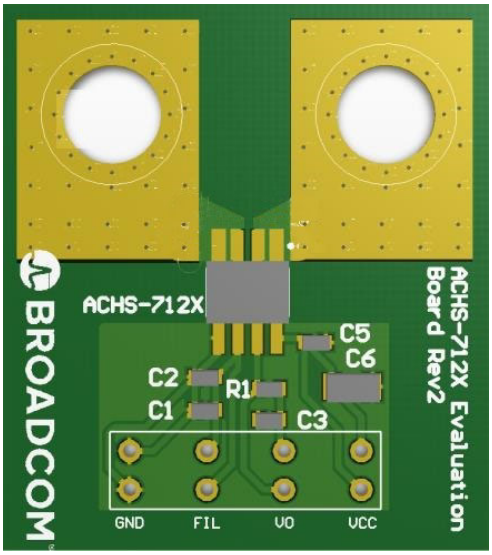

Figure 17: Broadcom Evaluation Board—Bottom Layer

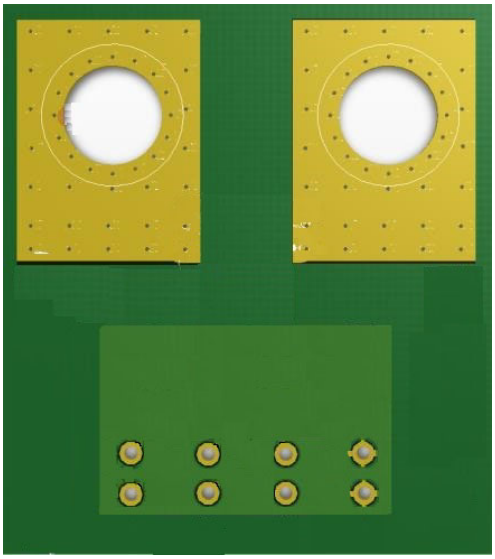

Broadcom, the pulse logo, Connecting everything, Avago Technologies, Avago, and the A logo are among the trademarks of Broadcom and/or its affiliates in the United States, certain other countries and/or the EU.

Copyright © 2018 by Broadcom. All Rights Reserved.

The term “Broadcom” refers to Broadcom Limited and/or its subsidiaries. For more information, please visit www.broadcom.com.

Broadcom reserves the right to make changes without further notice to any products or data herein to improve reliability, function, or design. Information furnished by Broadcom is believed to be accurate and reliable. However, Broadcom does not assume any liability arising out of the application or use of this information, nor the application or use of any product or circuit described herein, neither does it convey any license under its patent rights nor the rights of others.

Lead (Pb) Free
RoHS 6 fully compliant
RoHS 6 fully compliant options available;
-xxxE denotes a lead-free product

Компания «ЭлектроПласт» предлагает заключение долгосрочных отношений при поставках импортных электронных компонентов на взаимовыгодных условиях!

Наши преимущества:

- Оперативные поставки широкого спектра электронных компонентов отечественного и импортного производства напрямую от производителей и с крупнейших мировых складов;
- Поставка более 17-ти миллионов наименований электронных компонентов;
- Поставка сложных, дефицитных, либо снятых с производства позиций;
- Оперативные сроки поставки под заказ (от 5 рабочих дней);
- Экспресс доставка в любую точку России;
- Техническая поддержка проекта, помощь в подборе аналогов, поставка прототипов;
- Система менеджмента качества сертифицирована по Международному стандарту ISO 9001;
- Лицензия ФСБ на осуществление работ с использованием сведений, составляющих государственную тайну;
- Поставка специализированных компонентов (Xilinx, Altera, Analog Devices, Intersil, Interpoint, Microsemi, Aeroflex, Peregrine, Syfer, Eurofarad, Texas Instrument, Miteq, Cobham, E2V, MA-COM, Hittite, Mini-Circuits,General Dynamics и др.);

Помимо этого, одним из направлений компании «ЭлектроПласт» является направление «Источники питания». Мы предлагаем Вам помощь Конструкторского отдела:

- Подбор оптимального решения, техническое обоснование при выборе компонента;
- Подбор аналогов;
- Консультации по применению компонента;
- Поставка образцов и прототипов;
- Техническая поддержка проекта;
- Защита от снятия компонента с производства.

Как с нами связаться

Телефон: 8 (812) 309 58 32 (многоканальный)
Факс: 8 (812) 320-02-42
Электронная почта: org@eplast1.ru
Адрес: 198099, г. Санкт-Петербург, ул. Калинина, дом 2, корпус 4, литера А.