Chip Inductor (Chip Coil) for General Use Wire Wound Type

LQH32M Series (1210 Size)

■ Dimensions

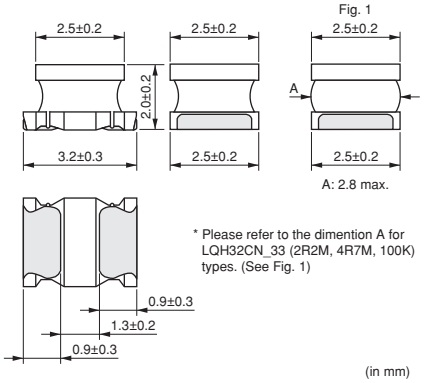

■ Packaging

Code	Packaging	Minimum Quantity
L	180mm Embossed Tape	2000
K	330mm Embossed Tape	7500

■ Rated Value (□: packaging code)

Part Number	Inductance	Test Frequency	Rated Current	Max. of DC Resistance	Q (min.)	Test Frequency	Self Resonance Frequency (min.)
LQH32MN1R0M23□	1.0μH ±20%	1MHz	445mA	0.5ohm	20	1MHz	100MHz
LQH32MN1R2M23□	1.2μH ±20%	1MHz	425mA	0.6ohm	20	1MHz	100MHz
LQH32MN1R5K23□	1.5μH ±10%	1MHz	400mA	0.6ohm	20	1MHz	75MHz
LQH32MN1R8K23□	1.8μH ±10%	1MHz	390mA	0.7ohm	20	1MHz	60MHz
LQH32MN2R2K23□	2.2μH ±10%	1MHz	370mA	0.8ohm	20	1MHz	50MHz
LQH32MN2R7K23□	2.7μH ±10%	1MHz	320mA	0.9ohm	20	1MHz	43MHz
LQH32MN3R3K23□	3.3μH ±10%	1MHz	300mA	1.0ohm	20	1MHz	38MHz
LQH32MN3R9K23□	3.9μH ±10%	1MHz	290mA	1.1ohm	20	1MHz	35MHz
LQH32MN4R7K23□	4.7μH ±10%	1MHz	270mA	1.2ohm	20	1MHz	31MHz
LQH32MN5R6K23□	5.6μH ±10%	1MHz	250mA	1.3ohm	20	1MHz	28MHz
LQH32MN6R8K23□	6.8μH ±10%	1MHz	240mA	1.5ohm	20	1MHz	25MHz
LQH32MN8R2K23□	8.2μH ±10%	1MHz	225mA	1.6ohm	20	1MHz	23MHz
LQH32MN100J23□	10μH ±5%	1MHz	190mA	1.8ohm	35	1MHz	20MHz
LQH32MN100K23□	10μH ±10%	1MHz	190mA	1.8ohm	35	1MHz	20MHz
LQH32MN120J23□	12μH ±5%	1MHz	180mA	2.0ohm	35	1MHz	18MHz
LQH32MN120K23□	12μH ±10%	1MHz	180mA	2.0ohm	35	1MHz	18MHz
LQH32MN150J23□	15μH ±5%	1MHz	170mA	2.2ohm	35	1MHz	16MHz
LQH32MN150K23□	15μH ±10%	1MHz	170mA	2.2ohm	35	1MHz	16MHz
LQH32MN180J23□	18μH ±5%	1MHz	165mA	2.5ohm	35	1MHz	15MHz
LQH32MN180K23□	18μH ±10%	1MHz	165mA	2.5ohm	35	1MHz	15MHz
LQH32MN220J23□	22μH ±5%	1MHz	150mA	2.8ohm	35	1MHz	14MHz
LQH32MN220K23□	22μH ±10%	1MHz	150mA	2.8ohm	35	1MHz	14MHz
LQH32MN270J23□	27μH ±5%	1MHz	125mA	3.1ohm	35	1MHz	13MHz
LQH32MN270K23□	27μH ±10%	1MHz	125mA	3.1ohm	35	1MHz	13MHz
LQH32MN330J23□	33μH ±5%	1MHz	115mA	3.5ohm	40	1MHz	12MHz
LQH32MN330K23□	33μH ±10%	1MHz	115mA	3.5ohm	40	1MHz	12MHz

Class of Magnetic Shield: No magnetic shield
Operating Temperature Range (Self-temperature rise is not included): -40 to +85°C

Continued on the following page.

●This data sheet is applied for CHIP INDUCTORS (CHIP COILS) used for General Electronics equipment for your design.

⚠Note:

1. This datasheet is downloaded from the website of Murata Manufacturing co., ltd. Therefore, it's specifications are subject to change or our products in it may be discontinued without advance notice. Please check with our sales representatives or product engineers before ordering.
2. This datasheet has only typical specifications because there is no space for detailed specifications. Therefore, please approve our product specifications or transact the approval sheet for product specifications before ordering.

Continued from the preceding page.

Part Number	Inductance	Test Frequency	Rated Current	Max. of DC Resistance	Q (min.)	Test Frequency	Self Resonance Frequency (min.)
LQH32MN390J23□	39μH ±5%	1MHz	110mA	3.9ohm	40	1MHz	11MHz
LQH32MN390K23□	39μH ±10%	1MHz	110mA	3.9ohm	40	1MHz	11MHz
LQH32MN470J23□	47μH ±5%	1MHz	100mA	4.3ohm	40	1MHz	11MHz
LQH32MN470K23□	47μH ±10%	1MHz	100mA	4.3ohm	40	1MHz	11MHz
LQH32MN560J23□	56μH ±5%	1MHz	85mA	4.9ohm	40	1MHz	10MHz
LQH32MN560K23□	56μH ±10%	1MHz	85mA	4.9ohm	40	1MHz	10MHz
LQH32MN680J23□	68μH ±5%	1MHz	80mA	5.5ohm	40	1MHz	9MHz
LQH32MN680K23□	68μH ±10%	1MHz	80mA	5.5ohm	40	1MHz	9MHz
LQH32MN820J23□	82μH ±5%	1MHz	70mA	6.2ohm	40	1MHz	8.5MHz
LQH32MN820K23□	82μH ±10%	1MHz	70mA	6.2ohm	40	1MHz	8.5MHz
LQH32MN101J23□	100μH ±5%	1MHz	80mA	7.0ohm	40	796kHz	8MHz
LQH32MN101K23□	100μH ±10%	1MHz	80mA	7.0ohm	40	796kHz	8MHz
LQH32MN121J23□	120μH ±5%	1MHz	75mA	8.0ohm	40	796kHz	7.5MHz
LQH32MN121K23□	120μH ±10%	1MHz	75mA	8.0ohm	40	796kHz	7.5MHz
LQH32MN151J23□	150μH ±5%	1MHz	70mA	9.3ohm	40	796kHz	7MHz
LQH32MN151K23□	150μH ±10%	1MHz	70mA	9.3ohm	40	796kHz	7MHz
LQH32MN181J23□	180μH ±5%	1MHz	65mA	10.2ohm	40	796kHz	6MHz
LQH32MN181K23□	180μH ±10%	1MHz	65mA	10.2ohm	40	796kHz	6MHz
LQH32MN221J23□	220μH ±5%	1MHz	65mA	11.8ohm	40	796kHz	5.5MHz
LQH32MN221K23□	220μH ±10%	1MHz	65mA	11.8ohm	40	796kHz	5.5MHz
LQH32MN271J23□	270μH ±5%	1MHz	65mA	12.5ohm	40	796kHz	5MHz
LQH32MN271K23□	270μH ±10%	1MHz	65mA	12.5ohm	40	796kHz	5MHz
LQH32MN331J23□	330μH ±5%	1MHz	65mA	13.0ohm	40	796kHz	5MHz
LQH32MN331K23□	330μH ±10%	1MHz	65mA	13.0ohm	40	796kHz	5MHz
LQH32MN391J23□	390μH ±5%	1MHz	50mA	22.0ohm	50	796kHz	5MHz
LQH32MN391K23□	390μH ±10%	1MHz	50mA	22.0ohm	50	796kHz	5MHz
LQH32MN471J23□	470μH ±5%	1kHz	45mA	25.0ohm	50	796kHz	5MHz
LQH32MN471K23□	470μH ±10%	1kHz	45mA	25.0ohm	50	796kHz	5MHz
LQH32MN561J23□	560μH ±5%	1kHz	40mA	28.0ohm	50	796kHz	5MHz
LQH32MN561K23□	560μH ±10%	1kHz	40mA	28.0ohm	50	796kHz	5MHz

Class of Magnetic Shield: No magnetic shield
Operating Temperature Range (Self-temperature rise is not included): -40 to +85°C

■ Q-Frequency Characteristics (Typ.)

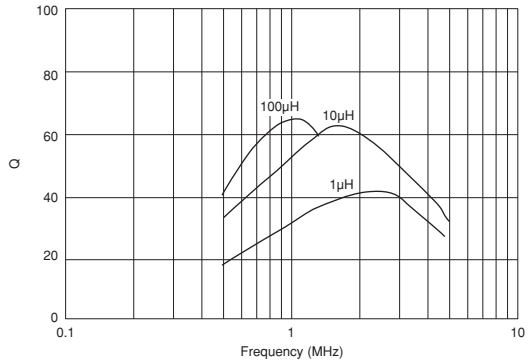

■ Inductance-Current Characteristics (Typ.)

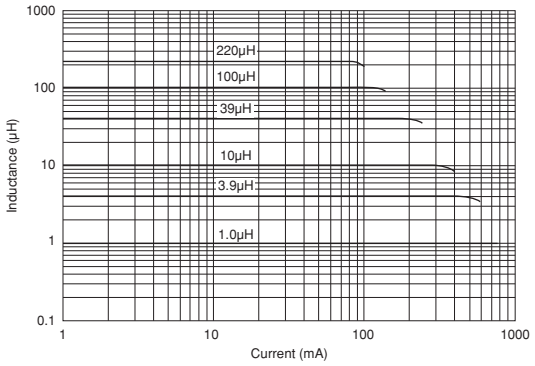

Continued on the following page.

●This data sheet is applied for CHIP INDUCTORS (CHIP COILS) used for General Electronics equipment for your design.

⚠Note:

1. This datasheet is downloaded from the website of Murata Manufacturing co., ltd. Therefore, it's specifications are subject to change or our products in it may be discontinued without advance notice. Please check with our sales representatives or product engineers before ordering.
2. This datasheet has only typical specifications because there is no space for detailed specifications. Therefore, please approve our product specifications or transact the approval sheet for product specifications before ordering.

Continued from the preceding page.

■ ⚠Caution/Notice

⚠Caution (Rating)

Do not use products beyond the rated current as this may create excessive heat.

Notice

Solderability of Tin plating termination chip might be deteriorated when low temperature soldering profile where peak solder temperature is below the Tin melting point is used. Please confirm the solderability of Tin plating termination chip before use.

●This data sheet is applied for CHIP INDUCTORS (CHIP COILS) used for General Electronics equipment for your design.

⚠Note:

1. This datasheet is downloaded from the website of Murata Manufacturing co., ltd. Therefore, it's specifications are subject to change or our products in it may be discontinued without advance notice. Please check with our sales representatives or product engineers before ordering.
2. This datasheet has only typical specifications because there is no space for detailed specifications. Therefore, please approve our product specifications or transact the approval sheet for product specifications before ordering.

Компания «ЭлектроПласт» предлагает заключение долгосрочных отношений при поставках импортных электронных компонентов на взаимовыгодных условиях!

Наши преимущества:

- Оперативные поставки широкого спектра электронных компонентов отечественного и импортного производства напрямую от производителей и с крупнейших мировых складов;
- Поставка более 17-ти миллионов наименований электронных компонентов;
- Поставка сложных, дефицитных, либо снятых с производства позиций;
- Оперативные сроки поставки под заказ (от 5 рабочих дней);
- Экспресс доставка в любую точку России;
- Техническая поддержка проекта, помощь в подборе аналогов, поставка прототипов;
- Система менеджмента качества сертифицирована по Международному стандарту ISO 9001;
- Лицензия ФСБ на осуществление работ с использованием сведений, составляющих государственную тайну;
- Поставка специализированных компонентов (Xilinx, Altera, Analog Devices, Intersil, Interpoint, Microsemi, Aeroflex, Peregrine, Syfer, Eurofarad, Texas Instrument, Miteq, Cobham, E2V, MA-COM, Hittite, Mini-Circuits,General Dynamics и др.);

Помимо этого, одним из направлений компании «ЭлектроПласт» является направление «Источники питания». Мы предлагаем Вам помощь Конструкторского отдела:

- Подбор оптимального решения, техническое обоснование при выборе компонента;
- Подбор аналогов;
- Консультации по применению компонента;
- Поставка образцов и прототипов;
- Техническая поддержка проекта;
- Защита от снятия компонента с производства.

Как с нами связаться

Телефон: 8 (812) 309 58 32 (многоканальный)
Факс: 8 (812) 320-02-42
Электронная почта: org@eplast1.ru
Адрес: 198099, г. Санкт-Петербург, ул. Калинина, дом 2, корпус 4, литера А.