Application Note

AN_216

Using the FT230X to design a GPS Dongle

Version 1.1

Issue Date: 2013-09-09

This application note illustrates how to develop a GPS to USB design using the FTDI FT230X chip.

Use of FTDI devices in life support and/or safety applications is entirely at the user's risk, and the user agrees to defend, indemnify and hold FTDI harmless from any and all damages, claims, suits or expense resulting from such use.

Future Technology Devices International Limited (FTDI)
Unit 1, 2 Seaward Place, Glasgow G41 1HH, United Kingdom
Tel.: +44 (0) 141 429 2777 Fax: + 44 (0) 141 429 2758
Web Site: http://ftdichip.com
Copyright © 2012 Future Technology Devices International Limited

Table of Contents

1 Introduction 2
1.1 Overview 2
1.2 Background 2
2 Example Circuit 3
3 PCB Data 6
4 Using FT230XQ GPS Dongle as a location sensor under Windows 7 7
5 Contact Information 9
Appendix A – References 10
Document References 10
Acronyms and Abbreviations 10
Appendix B – List of Figures 11
List of Figures 11
Appendix C – Revision History 12

Copyright © 2013 Future Technology Devices International Limited

1 Introduction

The FT230X is a USB to serial UART interface with optimised pin count for smaller PCB designs, offering single-chip USB to asynchronous serial data transfer interface. The entire USB protocol is handled on the chip. No USB specific firmware programming is required.
Small PCB footprint makes it ideal for space constrained applications such as the design of a GPS dongle – as described in this application note.

1.1 Overview

This application note gives detail of how to implement a GPS dongle design, which can be used to enable location services under Windows Operating System, using the FT230X USB to basic UART Bridge IC.

The application can be used as a reference design for the FT230X and details of the schematic and layout are given for reference.

1.2 Background

Computers today are more mobile than ever. From small laptops to Tablet PCs, many computers can go wherever the user wants to go. Programs that take advantage of the computer's mobility can add significant value to people's lives. For example, a program that can find nearby restaurants and provide driving directions would seem to be a natural fit for a portable computer. Starting with Windows 7, the Windows Sensor and Location platform enables the computer and applications to adapt to their current environment. With location sensors – such as GPS devices, applications and gadgets can know exactly where they are, enabling them to provide relevant content and functionality.

Copyright © 2013 Future Technology Devices International Limited

2 Example Circuit

The schematic diagram below gives details of how the FT230XQ chip can be connected to a GPS receiver to create a USB based GPS sensor. In this case a GPS module – GP-2106 has been used.

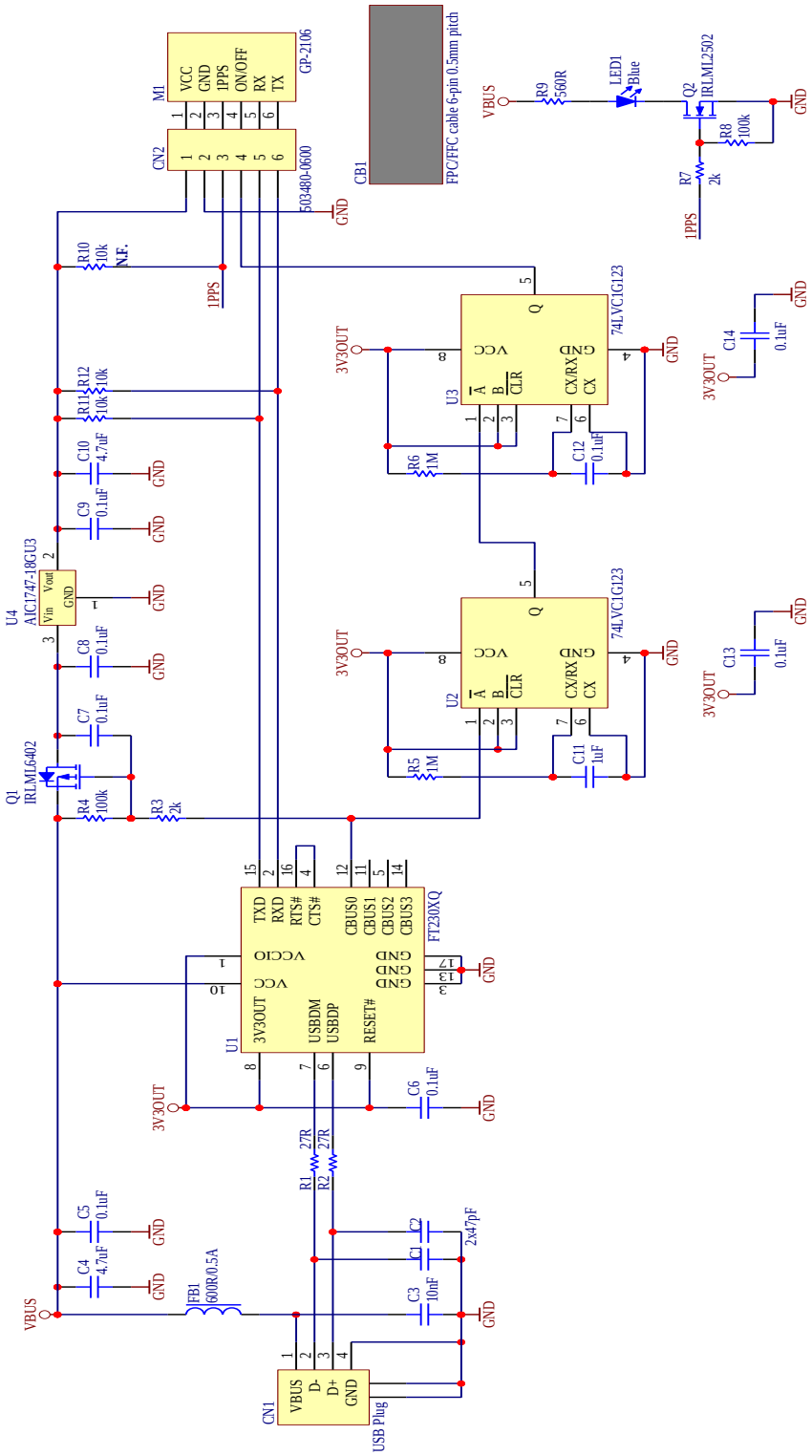

Figure 2.1 FT230XQ GPS Dongle circuit diagram

Copyright © 2013 Future Technology Devices International Limited

The FT230XQ (U1) provides the UART to USB conversion while GPS Module – GP-2106 (M1) provides location data in NMEA0183 v.3.01 format.

For more information about GP-2106 GPS receiver please visit the product web site: http://www.adh-tech.com.tw/?gp-2106(sirf-star-iv),71

More information on the FT230XS may be obtained from the FTDI web page:

http://www.ftdichip.com/Products/ICs/FT230X.html

The implementation is straight-forward with TXD output from the FT230XQ connected to RXD input of the GP-2106 GPS receiver and RXD input of the FT230XQ connected to TXD output from the GP-2106. These connections form a data link between the GPS receiver and USB port. RTS# and CTS# pins of the FT230XQ are connected together to disable hardware flow control.

To properly start-up the GPS receiver, power must be applied and 'On' pulse must be generated at pin-4 of the receiver. To satisfy this condition two monostable multivibrators (74LVC1G123) have been employed. First multivibrator U2 generates a delay during which the FT230XQ is enumerated by the USB host controller and power is applied to the GPS receiver. The second multivibrator generates an 'On' pulse (high level) which starts-up the chipset inside the GPS receiver module.

Figure below illustrates the behaviour of the start-up circuit.

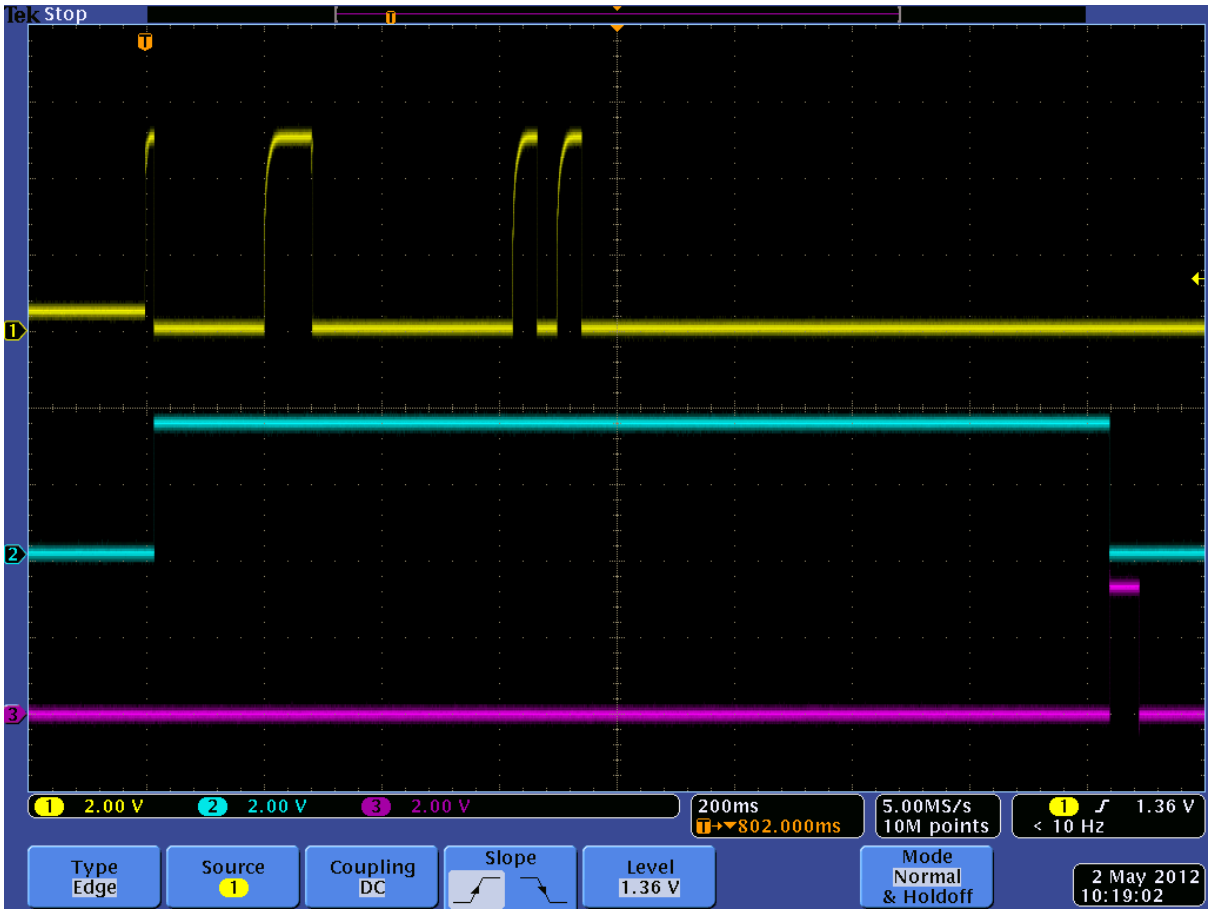

Figure 2.2 Start-up circuit scope waveforms

CH.1 (Yellow trace) was taken from the U1-pin-12 (CBUS0). CBUS0 is configured as an output of PWREN# signal.
CH.2 (Blue trace) probe was connected to the 'Q' output of U2.
CH.3 (Purple trace) probe was connected to the 'Q' output of U3.

Copyright © 2013 Future Technology Devices International Limited

The PWREN# pin toggles during the USB enumeration process and then it stays low as long as U1 is enumerated and the host computer is not in 'sleep' mode (i.e. it is not hibernated). A logic low level at this pin also enables the Q1 MOSFET transistor to conduct, feeding 'VBUS' (+5V) to the input of U4 voltage regulator. U4 reduces this voltage to 1.8V required by the GPS receiver.
As soon as PWREN# pin goes low for the first time, U2 triggers, driving its output high. Approximately 1.6 seconds later U2 output will go low triggering U3 which will generate 'On' pulse at the 'ON/OFF' input of the GPS receiver.
GPS dongle PCB has been equipped with the blue status LED (LED1). This LED will blink once a second when GPS fix is available (valid position has been acquired). LED1 is controlled by '1PPS' output from GPS receiver through Q2 MOSFET transistor.

Copyright © 2013 Future Technology Devices International Limited

3 PCB Data

FT230XQ GPS Dongle PCB files are available in Gerber format and Altium Designer project files and can be downloaded here:

http://www.ftdichip.com/support/documents/schematics/HW_248_rev1_1.zip

Copyright © 2013 Future Technology Devices International Limited

4 Using FT230XQ GPS Dongle as a location sensor under Windows 7

To use FT230XQ GPS Dongle as a location sensor, a special driver must be installed. There are many location sensor drivers freely available on the web. One of them can be downloaded from following location: http://www.turboirc.com/gps7/

Copyright © 2013 Future Technology Devices International Limited

5 Ordering Information

Due to the large volume of interest expressed in this solution by FTDI customers, FTDI are delighted to offer a finished product, ready to use in a tough, contoured, hardened plastic enclosure.

The module has a type A USB connector with dust cap for connecting to the USB host and will be powered from the USB host.

Figure 5.1 FT-X-GPS Dongle

Module Code	Utilised IC Code	Description
FT-X-GPS	FT230XQ	USB GPS Dongle

Table 5-1 – Ordering Information

Drivers for the FT230X are available at:

http://www.ftdichip.com/Drivers/VCP.htm

Copyright © 2013 Future Technology Devices International Limited

6 Contact Information

Head Office – Glasgow, UK

Future Technology Devices International Limited
Unit 1, 2 Seaward Place, Centurion Business Park
Glasgow G41 1HH
United Kingdom
Tel: +44 (0) 141 429 2777
Fax: +44 (0) 141 429 2758

E-mail (Sales) sales1@ftdichip.com
E-mail (Support) support1@ftdichip.com
E-mail (General Enquiries) admin1@ftdichip.com

Branch Office – Tigard, Oregon, USA

Future Technology Devices International Limited (USA)
7130 SW Fir Loop
Tigard, OR 97223
USA
Tel: +1 (503) 547 0988
Fax: +1 (503) 547 0987

E-Mail (Sales) us.sales@ftdichip.com
E-Mail (Support) us.support@ftdichip.com
E-Mail (General Enquiries) us.admin@ftdichip.com

Branch Office – Taipei, Taiwan

Future Technology Devices International Limited (Taiwan)
2F, No. 516, Sec. 1, NeiHu Road
Taipei 114
Taiwan , R.O.C.
Tel: +886 (0) 2 8791 3570
Fax: +886 (0) 2 8791 3576

E-mail (Sales) asia.sales1@ftdichip.com
E-mail (Support) asia.support1@ftdichip.com
E-mail (General Enquiries) asia.admin1@ftdichip.com

Branch Office – Shanghai, China

Future Technology Devices International Limited (China)
Room 1103, No. 666 West Huaihai Road,
Shanghai, 200052

China
Tel: +86 21 62351596
Fax: +86 21 62351595

E-mail (Sales) cn.sales@ftdichip.com
E-mail (Support) cn.support@ftdichip.com
E-mail (General Enquiries) cn.admin@ftdichip.com

Web Site

http://ftdichip.com

System and equipment manufacturers and designers are responsible to ensure that their systems, and any Future Technology Devices International Ltd (FTDI) devices incorporated in their systems, meet all applicable safety, regulatory and system-level performance requirements. All application-related information in this document (including application descriptions, suggested FTDI devices and other materials) is provided for reference only. While FTDI has taken care to assure it is accurate, this information is subject to customer confirmation, and FTDI disclaims all liability for system designs and for any applications assistance provided by FTDI. Use of FTDI devices in life support and/or safety applications is entirely at the user's risk, and the user agrees to defend, indemnify and hold harmless FTDI from any and all damages, claims, suits or expense resulting from such use. This document is subject to change without notice. No freedom to use patents or other intellectual property rights is implied by the publication of this document. Neither the whole nor any part of the information contained in, or the product described in this document, may be adapted or reproduced in any material or electronic form without the prior written consent of the copyright holder. Future Technology Devices International Ltd, Unit 1, 2 Seaward Place, Centurion Business Park, Glasgow G41 1HH, United Kingdom. Scotland Registered Company Number: SC136640

Copyright © 2013 Future Technology Devices International Limited

Appendix A – References

Document References

FT230XQ webpage:

http://www.ftdichip.com/Support/Documents/DataSheets/ICs/DS_FT230X.pdf

GP-2106 webpage:

http://www.adh-tech.com.tw/?gp-2106(sirf-star-iv),71

Information on GPS system:

http://en.wikipedia.org/wiki/Global_Positioning_System

Information on Windows Location API:

Acronyms and Abbreviations

Terms	Description
GPS	Global Positioning System
LED	Light Emitting Diode
MOSFET	Metal–Oxide–Semiconductor Field-Effect Transistor
RXD	Receive Data (The receive data line of RS232)
TXD	Transmit Data (The transmit data line of RS232)
UART	Universal Asynchronous Receiver/Transmitter
USB	Universal Serial Bus
USB-IF	USB Implementers Forum

Copyright © 2013 Future Technology Devices International Limited

Appendix B – List of Figures

List of Figures

Figure 2.1 FT230XQ GPS Dongle circuit diagram 3
Figure 2.2 Start-up circuit scope waveforms 4
Figure 5.1 FT-X-GPS Dongle 8

List of tables

Table 5-1 – Ordering Information 8

Copyright © 2013 Future Technology Devices International Limited

Appendix C – Revision History

Document Title: AN_216 Using the FT230X to design a GPS Dongle

Document Reference No.: FT_000698

Clearance No.: FTDI# 301

Product Page: http://www.ftdichip.com/Support.htm/FTReferenceDesigns.htm

Document Feedback: Send Feedback

Revision	Changes	Date
1.0	Initial Release	2012-07-09
1.1	Included details of dongle for retail. Updated US contact details Added image in section 5	2013-08-08

Copyright © 2013 Future Technology Devices International Limited

Компания «ЭлектроПласт» предлагает заключение долгосрочных отношений при поставках импортных электронных компонентов на взаимовыгодных условиях!

Наши преимущества:

- Оперативные поставки широкого спектра электронных компонентов отечественного и импортного производства напрямую от производителей и с крупнейших мировых складов;
- Поставка более 17-ти миллионов наименований электронных компонентов;
- Поставка сложных, дефицитных, либо снятых с производства позиций;
- Оперативные сроки поставки под заказ (от 5 рабочих дней);
- Экспресс доставка в любую точку России;
- Техническая поддержка проекта, помощь в подборе аналогов, поставка прототипов;
- Система менеджмента качества сертифицирована по Международному стандарту ISO 9001;
- Лицензия ФСБ на осуществление работ с использованием сведений, составляющих государственную тайну;
- Поставка специализированных компонентов (Xilinx, Altera, Analog Devices, Intersil, Interpoint, Microsemi, Aeroflex, Peregrine, Syfer, Eurofarad, Texas Instrument, Miteq, Cobham, E2V, MA-COM, Hittite, Mini-Circuits,General Dynamics и др.);

Помимо этого, одним из направлений компании «ЭлектроПласт» является направление «Источники питания». Мы предлагаем Вам помощь Конструкторского отдела:

- Подбор оптимального решения, техническое обоснование при выборе компонента;
- Подбор аналогов;
- Консультации по применению компонента;
- Поставка образцов и прототипов;
- Техническая поддержка проекта;
- Защита от снятия компонента с производства.

Как с нами связаться

Телефон: 8 (812) 309 58 32 (многоканальный)
Факс: 8 (812) 320-02-42
Электронная почта: org@eplast1.ru
Адрес: 198099, г. Санкт-Петербург, ул. Калинина, дом 2, корпус 4, литера А.