F3SJ-B

Safety Light Curtains

- Fast and easy installation
- Resolution: 25 mm (1.01 in.)
- Range: 7 m (23 ft.)
- Protected heights: 185 to 2065 mm (7.28 to 81.26 in.)
- Very compact size: 30 x 30 mm (1.18 x 1.18 in.)
- Cascaded designs possible – 3 segments
- Simple muting
- Cross-talk prevention

Description

In addition to the simple functions inherited from the EASY type, such as global support, easy-to-view indicators, the BASIC type includes series connection and simple muting functions . This enables the BASIC type to satisfy installations that require multiple safety light curtains.

Up to three sets connected in a series

It is possible to connect up to three sets of safety light curtains in series. These sensors can be placed in a U-shaped or L-shaped pattern with a single power line, thus requiring less wiring.

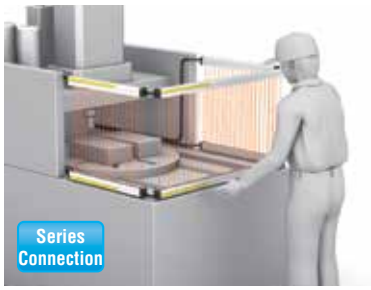

Instant visibility of process trouble during muting

The BASIC type includes a muting function which temporarily disables the safety light curtain when a workpiece passes through. In the event of any trouble occurring, the error can be instantly recognized from the pattern of the LED indicators, allowing for a fast solution.

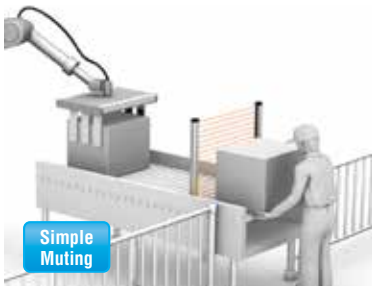

Functions inherited from the EASY type

Simple functions such as universal power voltage specification, easy-to-view diagnostics, a fixed response time have been inherited from the EASY type, As a result, expect reduced work-hours at each stage of use, from design and installation to operation.

Specifications

Main Units

F3SJ-B□□□□P25

Sensor type		Type 4 safety light curtain
Setting tool connection *1		Parameter settings: Not available
Safety category		Safety purpose of category 4, 3, 2, 1, or B
Detection capability		Opaque objects 25 mm in diameter
Beam gap (P)		20 mm
Number of beams (n)		8 to 102
Protective height (PH)		185 to 2,065 mm
Lens diameter		Diameter 5 mm
Operating range *2		0.2 to 7 m
Response time (under stable light incident condition)	ON to OFF	15 ms max. (response time at 1 set connection, series connection of 2 sets or 3 sets)
	OFF to ON	70 ms max. (response time at 1 set connection, series connection of 2 sets or 3 sets)
Startup waiting time		2 s max.
Power supply voltage (Vs)		SELV/PELV 24 VDC±20% (ripple p-p 10% max.)
Consumption current (no load)	Emitter	Up to 22 beams: 52 mA max., 26 to 42 beams: 68 mA max., 46 to 62 beams: 75 mA max., 66 to 82 beams: 88 mA max., 86 to 102 beams: 101 mA max.
	Receiver	Up to 22 beams: 45 mA max., 26 to 42 beams: 50 mA max., 46 to 62 beams: 46 mA max., 66 to 82 beams: 61 mA max., 86 to 102 beams: 67 mA max.
Light source (emitted wavelength)		Infrared LED (870 nm)
Effective aperture angle (EAA)		Based on IEC 61496-2. Within ±2.5° for both emitter and receiver when the detection distance is 3 m or over
Safety outputs (OSSD)		Two PNP transistor outputs, load current 200 mA max., residual voltage 2 V max. (except for voltage drop due to cable extension), Leakage current 1 mA max., load inductance 2.2 H max. *3 Maximum capacity load 1 μF *4
Auxiliary output 1		Two PNP transistor outputs, load current 100 mA max., residual voltage 2 V max. (except for voltage drop due to cable extension), leak current 1 mA max.
Output operation mode		Safety output: On when receiving light Auxiliary output: – Reverse output of safety output for a basic system – ON when muting/override for a muting system
Input voltage		ON voltage: Vs-3 V to Vs *5 OFF voltage: 0 V to 1/2 Vs or open
Mutual interference prevention function		Mutual interference prevention algorithm prevents interference in up to 3 sets.
Series connection		Time division emission by series connection • Number of connections: up to 3 sets (between F3SJ-Bs only) Other models cannot be connected. • Total number of beams: up to 192 beams • Maximum cable length for 2 sets: no longer than 7 m
Test function		• Self test (at power-ON and at power distribution) • External test (emission stop function by test input)
Safety-related functions		• Interlock (basic system) • External device monitoring (basic system) • Muting (muting system) • Override (muting system)
Connection type		Connector method (M12, 8-pin)
Protection circuit		Output short-circuit protection, and power supply reverse polarity protection
Ambient temperature		Operating: -10 to 55°C (non-freezing), Storage: -25 to 70°C
Ambient humidity		Operating: 35% to 85% (no condensation), Storage: 35% to 95% RH
Operating ambient light intensity		Incandescent lamp: 3,000 lx max., Sunlight: 10,000 lx max.
Insulation resistance		20 MΩ min. (at 500 VDC)
Dielectric strength		1,000 VAC 50/60 Hz, 1 min
Degree of protection		IP65 (IEC 60529)
Vibration resistance		Malfunction: 10 to 55 Hz, Multiple amplitude of 0.7 mm, 20 sweeps in X, Y, and Z directions
Shock resistance		Malfunction: 100 m/s2, 1,000 times each in X, Y, and Z directions
Pollution degree		Pollution degree 3 (IEC 60664-1)

(Continued on next page)

*1. Do not use the Support Software and Setting Console for F3SJ-A. Operation cannot be guaranteed.
*2. Use of the Spatter Protection Cover causes a 10% maximum sensing distance attenuation.
*3. The load inductance is the maximum value when the safety output frequently repeats ON and OFF. When you use the safety output at 4 Hz or less, the usable load inductance becomes larger.
*4. These values must be taken into consideration when connecting elements including a capacitive load such as capacitor.
*5. The Vs indicates a voltage value in your environment.
*7. Mounting brackets are sold separately.

Specifications (continued)

Main Units

F3SJ-B□□□□P25 (continued)

Power cable	Connection method: Prewired connector cable, cable length 0.3 m, connector type (M12, 8-pin), connector: IP67 rated (when mated) Number of wires: Emitter: 8 wires Cable diameter: Dia. 6 mm Allowable bending radius: R5 mm
Extension cable	30 m max.
Material	Case: Aluminum Cap: ABS resin, PBT Optical cover: PMMA resin (acrylic) Cable: Oil resistant PVC
Weight (packed state)	Weight (g) = (protective height) x 2.7 + 500
Accessories	Test rod, User's Manual (CD-ROM) *7
Applicable standards	IEC 61496-1, EN 61496-1 UL 61496-1, Type 4 ESPE (Electro-Sensitive Protective Equipment) IEC 61496-2, CLC/TS 61496-2, UL 61496-2, Type 4 AOPD (Active Opto-electronic Protective Devices) IEC 61508-1 to -3, EN 61508-1 to -3 SIL3 IEC 13849-1: 2006, EN ISO 13849-1: 2008 (PLe, Cat.4) UL 508, UL 1998, CAN/CSA C22.2 No.14, CAN/CSA C22.2 No.0.8

Accessories

Control Unit

		F3SP-B1P
Applicable sensor		F3SJ-B/A (Only for PNP output type)*
Power supply voltage		24 VDC ±10%
Power supply consumption		DC1.7 W max. (not including sensor's current consumption)
Operation time		100 ms max. (not including sensor's response time)
Response time		100 ms max. (not including sensor's response time)
Relay output	Number of contacts	3NO + 1NC
	Rated load	250 VAC 5 A (cos = 1), 30 VDC 5 A L/R = 0 ms
	Rated current	5 A
Connection type	Between sensors	M12 connector (8-pin)
	Others	Terminal block
Weight (packed state)		Approx. 280 g
Accessories		Instruction manual

*NPN output type cannot be connected. Also, the system cannot be used as a muting system.

Applications

Selecting the Best Configuration

Space Efficient and Low Cost
The built-in external device monitoring function eliminates the need for a safety relay unit.

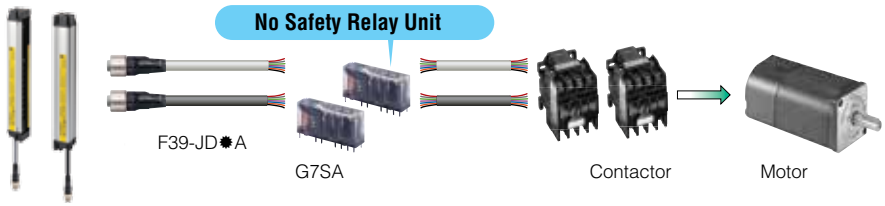

Reduced Wiring and Easy Maintenance
Cables with connectors on both ends simplify connections and prevent wiring errors.

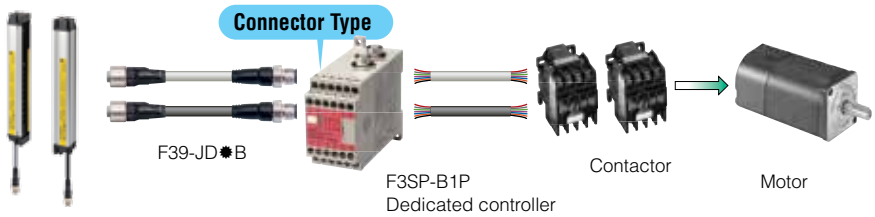

Wiring

Basic Wiring Diagram

Wiring when using manual reset mode, external device monitoring

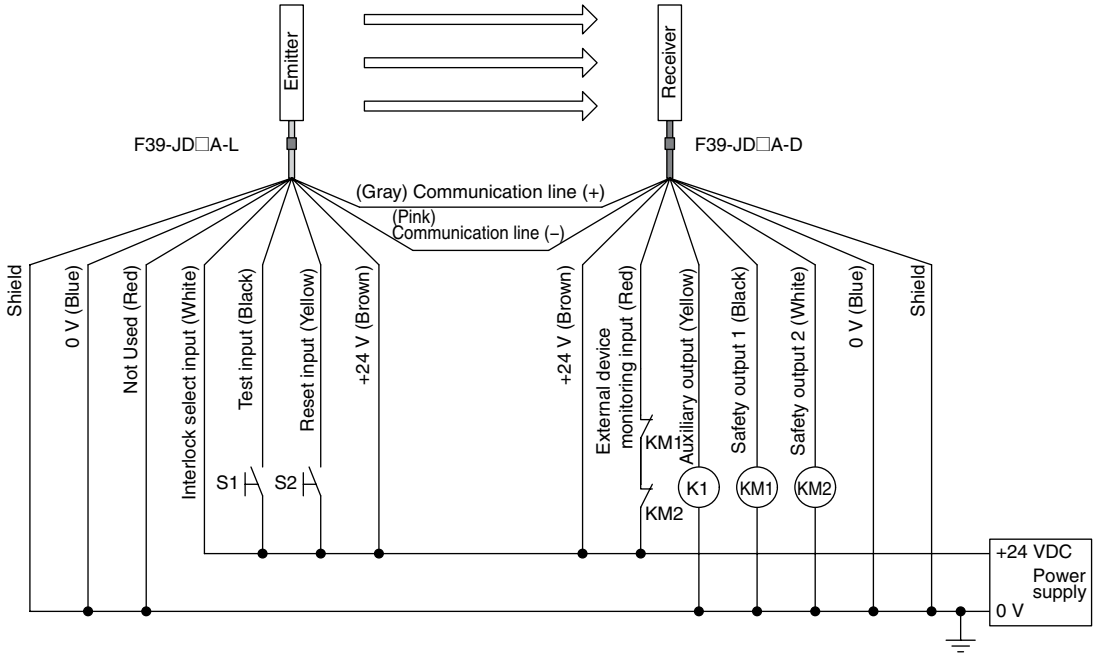

S1 : External test switch (connect to 0 V if a switch is not required)
S2 : Interlock/lockout reset switch
KM1, KM2 : Safety relay with force-guided contact (G7SA) or magnetic contactor
K1 : Load or PLC, etc. (for monitoring)

Wiring for auto reset mode and deactivated external device monitoring

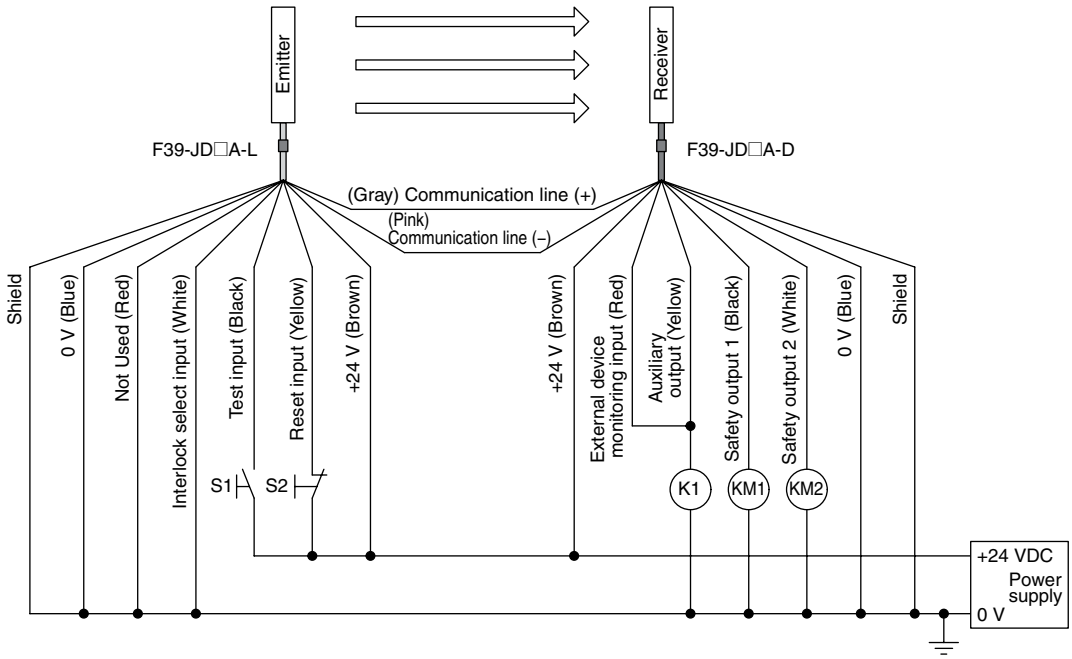

S1 : External test switch (connect to 0 V if a switch is not required)
S2 : Lockout reset switch
KM1, KM2 : Safety relay with force-guided contact (G7SA) or magnetic contactor
K1 : Load or PLC, etc. (for monitoring)

Dimensions

(mm)

F3SJ-B/F3SJ-E Dimensions

The dimensions of the F3SJ-B and F3SJ-E are the same except for connector cables and cable leads.

Main Units

Mounting Top/Bottom and Intermediate Brackets

Backside mounting

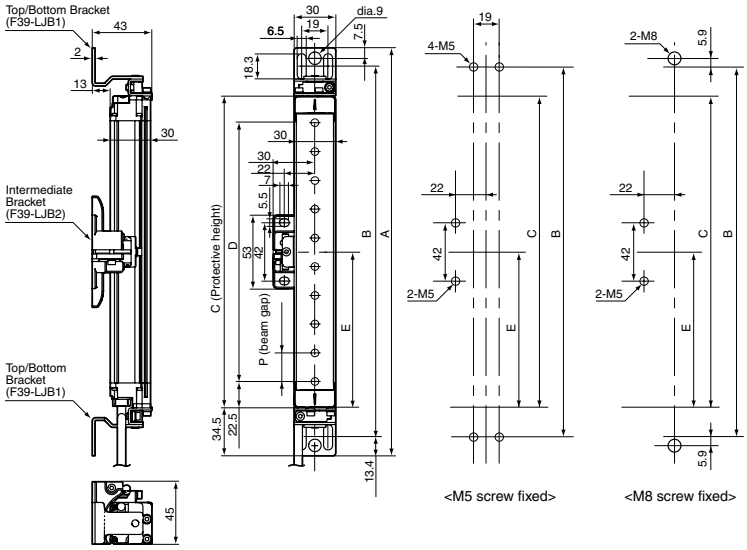

Mounting screw holes

C (protective height): 4-digit number in the table
A = C + 69, B = C + 42.2
D = C - 45, E = See table below, P = 20

Protective height	Number of intermediate brackets	E
185 to 1,105	0	—
1,185 to 1,345	1	C/2 max.
1,425 to 2,065	2	C/3 max.

Side mounting

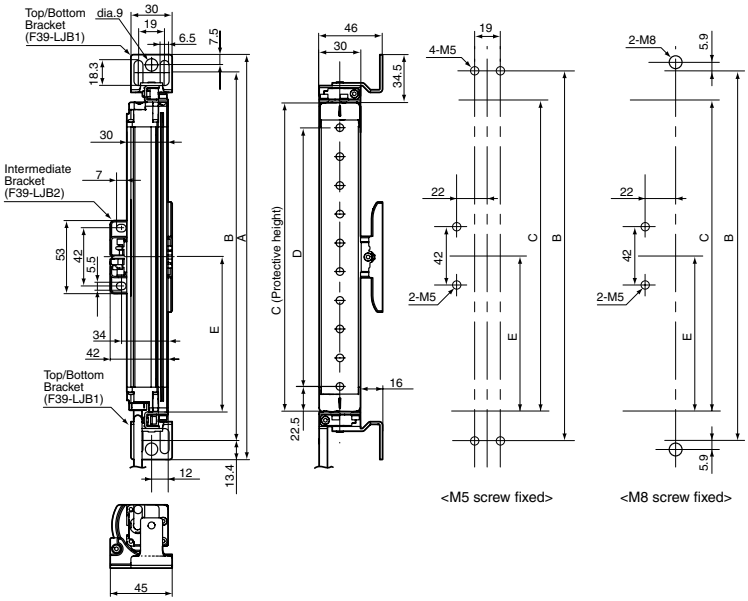

Mounting screw holes

C (protective height): 4-digit number in the table
A = C + 69, B = C + 42.2
D = C - 45, E = See table below, P = 20

Protective height	Number of intermediate brackets	E
185 to 1,105	0	—
1,185 to 1,345	1	C/2 max.
1,425 to 2,065	2	C/3 max.

Dimensions of top/bottom bracket for F39-LJB1

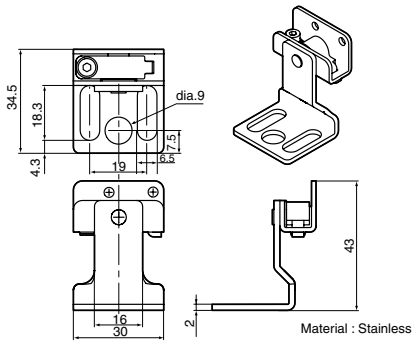

Dimensions (continued)

(mm)

Main Units

When Using Quick Mount Brackets

Backside mounting

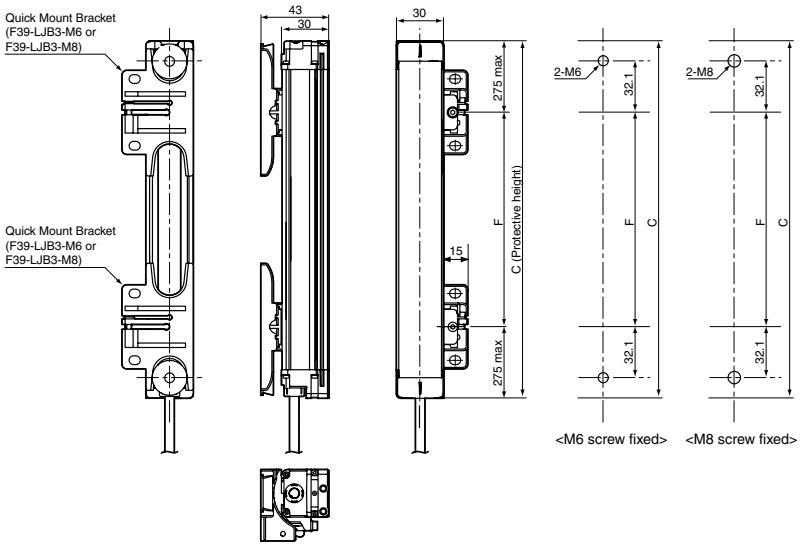

Mounting screw holes

C (protective height): 4-digit number in the table
F = See the table below.

Protective height	Number of intermediate brackets	F
185 to 1,105	2	555 mm max.
1,185 to 1,585	3	555 mm max.
1,665 to 2,065	4	555 mm max.

Side mounting

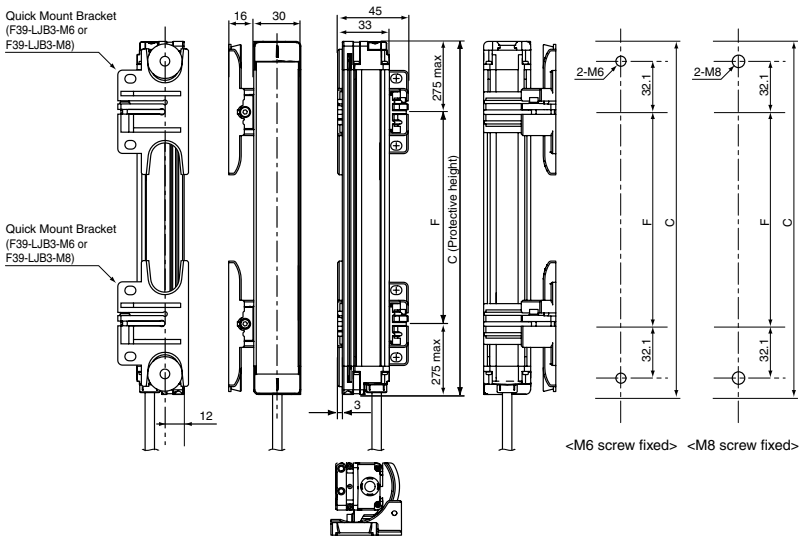

Mounting screw holes

C (protective height): 4-digit number in the table
F = See the table below.

Protective height	Number of intermediate brackets	F
185 to 1,105	2	555 mm max.
1,185 to 1,585	3	555 mm max.
1,665 to 2,065	4	555 mm max.

Dimensions of quick mount bracket for F39-LJB3

Backside mounting

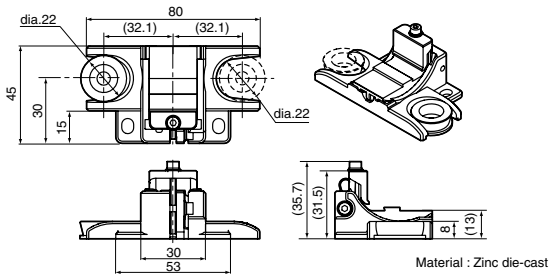

Material : Zinc die-cast

Side mounting

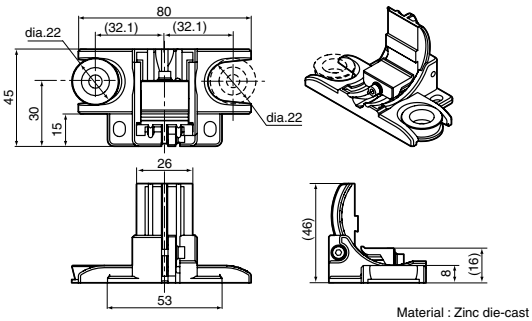

Material : Zinc die-cast

Quick mount M6 bracket

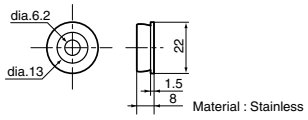

Material : Stainless

Quick mount M8 bracket

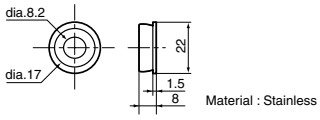

Material : Stainless

SYSMAC
SAFETY, TECHNOLOGY & INNOVATION
OMRON
AUTOMATION & SAFETY

Ordering

Main Units

Safety Light Curtains

Application	Detection capability	Beam gap	Operating range	Protective height (mm)	Model
					PNP output
Hand protection	Dia. 25 mm	20 mm	0.2 to 7 m	185 to 2,065	F3SJ-B□□□□P25

Safety Light Curtain Model List

Please contact our sales representatives.

F3SJ-B Series (20 mm pitch)

Model	Number of beams	Protective height [mm] *
F3SJ-B0185P25	8	185
F3SJ-B0225P25	10	225
F3SJ-B0305P25	14	305
F3SJ-B0385P25	18	385
F3SJ-B0465P25	22	465
F3SJ-B0545P25	26	545
F3SJ-B0625P25	30	625
F3SJ-B0705P25	34	705
F3SJ-B0785P25	38	785
F3SJ-B0865P25	42	865
F3SJ-B0945P25	46	945
F3SJ-B1025P25	50	1,025
F3SJ-B1105P25	54	1,105

Model	Number of beams	Protective height [mm] *
F3SJ-B1185P25	58	1,185
F3SJ-B1265P25	62	1,265
F3SJ-B1345P25	66	1,345
F3SJ-B1425P25	70	1,425
F3SJ-B1505P25	74	1,505
F3SJ-B1585P25	78	1,585
F3SJ-B1665P25	82	1,665
F3SJ-B1745P25	86	1,745
F3SJ-B1825P25	90	1,825
F3SJ-B1905P25	94	1,905
F3SJ-B1985P25	98	1,985
F3SJ-B2065P25	102	2,065

*Protective height (mm) = Total sensor length

Accessories (sold separately)

Single-end Connector Cable (2 cables per set, for emitter and receiver)

For wiring with safety circuit such as single safety relay, safety relay unit, and safety controller.

Appearance	Cable length	Specifications	Model
	3 m	M12 connector (8-pin)	F39-JD3A
	7 m		F39-JD7A
	10 m		F39-JD10A
	15 m		F39-JD15A
	20 m		F39-JD20A

Double-end Connector Cable (2 cables per set, for emitter and receiver)

Control unit for connection with F3SP-B1P, to extend the length under series connection.*

Appearance	Cable length	Specifications	Model
	0.5 m	M12 connector (8-pin)	F39-JDR5B
	1 m		F39-JD1B
	3 m		F39-JD3B
	5 m		F39-JD5B
	7 m		F39-JD7B
	10 m		F39-JD10B
	15 m		F39-JD15B
	20 m		F39-JD20B

*To extend the cable length under series connection, use F39-JBR2W and F39-JD□B in combination. Also, the cable length 10 to 20 m cannot be used.

Ordering (continued)

Accessories (sold separately) (continued)

Series-connection Cable (2 cables per set, for emitter and receiver)

Type	Appearance	Cable length	Model	Application
Series connection cable for extension		0.2 m	F39-JBR2W *1	For series connection *2
Extension cable		0.5 to 7 m	F39-JD□B	To change series connection length in combination with F39-JBR2W

*1. This product is for F3SJ-B only.
*2. Total cable length of series connection is 0.5 m to connect to connector cable of the main sensor unit.

Relays with Forcibly Guided Contacts

Type	Appearance	Specifications	Model	Remarks
G7SA Relays with Forcibly Guided Contacts		• Nodes: 4 • Contact type: 2A2B • Rated switch load: 250 VAC 6A, 30 VDC 6A	G7SA-2A2B	For information on the G7SA, contact Omron or visit website.
		• Nodes: 4 • Contact type: 3NO+1NC • Rated switch load: 250 VAC 6A, 30 VDC 6A	G7SA-3A1B	
G7S-□-E Relays with Forcibly Guided Contacts	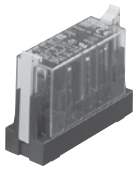	• Nodes: 6 • Contact type: 4NO+2NC • Rated switch load: 250 VAC 10 A, 30 VDC 10 A	G7S-4A2B-E	For information on the G7S-□-E, contact Omron or visit website
		• Nodes: 6 • Contact type: 3NO+3NC • Rated switch load: 250 VAC 10 A, 30 VDC 10 A	G7S-3A3B-E	

Laser Pointer

Appearance	Description	Model
	Laser Pointer for F3SJ	F39-PTJ

Key Cap for Muting

Appearance	Description	Model
	Muting key cap for F3SJ-B	F39-CN10

Ordering (continued)

Accessories (sold separately) (continued)

Sensor Mounting Bracket (sold separately)

Appearance	Specifications	Model	Application	Remarks
	Top/bottom bracket	F39-LJB1	Top/bottom bracket for F3SJ-E/B	2 for the emitter, 2 for the receiver, total of 4 per set
	Intermediate bracket	F39-LJB2 *1 *2	In combination use with top/bottom bracket for F3SJ-E/B Can be used as free-location bracket.	1 set with 2 pieces
	Quick mount bracket	F39-LJB3-M6 *1	Quick mount bracket for F3SJ-E/B Supports M6 slide nut for aluminum frame.	1 set with 2 pieces
		F39-LJB3-M8 *2	Quick mount bracket for F3SJ-E/B Supports M8 slide nut for aluminum frame.	
	M6 slide nut	F39-LJB3-M6K *1	Spare slide nut for use with Quick mount bracket.	Hexagon socket head cap screws (M6 x 10) are included.
	M8 slide nut	F39-LJB3-M8K *2		Hexagon socket head cap screws (M8 x 14) are included.
	Compatible mounting bracket	F39-LJB4	Mounting bracket used when replacing existing area sensors (F3SJ-A or F3SN) with the F3SJ-E/B.	2 for the emitter, 2 for the receiver, total of 4 per set

Note: All the sensor mounting brackets for the F3SJ-E are sold separately.
*1. Combining F39-LJB2 and F39-LJB3-M6K makes F39-LJB3-M6.
*2. Combining F39-LJB2 and F39-LJB3-M8K makes F39-LJB3-M8.

Ordering (continued)

Accessories (sold separately) (continued)

Spatter Protection Cover (2 cables per set, common for emitter/receiver)

Appearance	Model
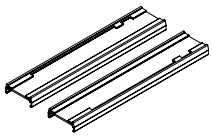	F39-HB□□□□*1 *2

*1. The same 4-digit numbers as the protective heights (□□□□ in the light curtain model names) are substituted in the model names.
*2. It cannot be mounted to the models with the suffix "-02TS".

Protective Bar

Appearance	Model	Remarks
	F39-PB□□□□*1	• 2 light curtain brackets • 4 mounting brackets • 0 to 4 intermediate brackets for backside mounting (quantity required for the sensing width) • 0 to 4 intermediate brackets for mounting to the sides (quantity required for the sensing width)
	F39-PB□□□□-S *1 *2	• 1 light curtain bracket • 2 mounting brackets • 0 to 2 intermediate brackets for backside mounting (quantity required for the sensing width) • 0 to 2 intermediate brackets for mounting to the sides (quantity required for the sensing width)

Note: The following are not provided with the protective bars: Safety Light Curtain, Safety Light Curtain Top/Bottom Brackets, Wall Mounting Screw Unit
*1. The same 4-digit numbers indicating the protective height that is used in the Sensor model number (□□□□) are used in the part of the Protector model number.
*2. Purchase the F39-PB□□□□ (which contains two sets of brackets) to use Protective Bars for both the Emitter and Receiver.

SYSMAC SAFETY, TECHNOLOGY & INNOVATION
OMRON AUTOMATION & SAFETY

OMRON

Terms and Conditions of Sale

1. Offer; Acceptance. These terms and conditions (these "Terms") are deemed part of all quotes, agreements, purchase orders, acknowledgments, price lists, catalogs, manuals, brochures and other documents, whether electronic or in writing, relating to the sale of products or services (collectively, the "Products") by Omron Electronics LLC and its subsidiary companies ("Omron"). Omron objects to any terms or conditions proposed in Buyer's purchase order or other documents which are inconsistent with, or in addition to, these Terms.
2. Prices; Payment Terms. All prices stated are current, subject to change without notice by Omron. Omron reserves the right to increase or decrease prices on any unshipped portions of outstanding orders. Payments for Products are due net 30 days unless otherwise stated in the invoice.
3. Discounts. Cash discounts, if any, will apply only on the net amount of invoices sent to Buyer after deducting transportation charges, taxes and duties, and will be allowed only if (i) the invoice is paid according to Omron's payment terms and (ii) Buyer has no past due amounts.
4. Interest. Omron, at its option, may charge Buyer 1-1/2% interest per month or the maximum legal rate, whichever is less, on any balance not paid within the stated terms.
5. Orders. Omron will accept no order less than $200 net billing.
6. Governmental Approvals. Buyer shall be responsible for, and shall bear all costs involved in, obtaining any government approvals required for the importation or sale of the Products.
7. Taxes. All taxes, duties and other governmental charges (other than general real property and income taxes), including any interest or penalties thereon, imposed directly or indirectly on Omron or required to be collected directly or indirectly by Omron for the manufacture, production, sale, delivery, importation, consumption or use of the Products sold hereunder (including customs duties and sales, excise, use, turnover and license taxes) shall be charged to and remitted by Buyer to Omron.
8. Financial. If the financial position of Buyer at any time becomes unsatisfactory to Omron, Omron reserves the right to stop shipments or require satisfactory security or payment in advance. If Buyer fails to make payment or otherwise comply with these Terms or any related agreement, Omron may (without liability and in addition to other remedies) cancel any unshipped portion of Products sold hereunder and stop any Products in transit until Buyer pays all amounts, including amounts payable hereunder, whether or not then due, which are owing to it by Buyer. Buyer shall in any event remain liable for all unpaid accounts.
9. Cancellation; Etc. Orders are not subject to rescheduling or cancellation unless Buyer indemnifies Omron against all related costs or expenses.
10. Force Majeure. Omron shall not be liable for any delay or failure in delivery resulting from causes beyond its control, including earthquakes, fires, floods, strikes or other labor disputes, shortage of labor or materials, accidents to machinery, acts of sabotage, riots, delay in or lack of transportation or the requirements of any government authority.
11. Shipping; Delivery. Unless otherwise expressly agreed in writing by Omron:
    a. Shipments shall be by a carrier selected by Omron; Omron will not drop ship except in "break down" situations.
    b. Such carrier shall act as the agent of Buyer and delivery to such carrier shall constitute delivery to Buyer;
    c. All sales and shipments of Products shall be FOB shipping point (unless otherwise stated in writing by Omron), at which point title and risk of loss shall pass from Omron to Buyer; provided that Omron shall retain a security interest in the Products until the full purchase price is paid;
    d. Delivery and shipping dates are estimates only; and
    e. Omron will package Products as it deems proper for protection against normal handling and extra charges apply to special conditions.
12. Claims. Any claim by Buyer against Omron for shortage or damage to the Products occurring before delivery to the carrier must be presented in writing to Omron within 30 days of receipt of shipment and include the original transportation bill signed by the carrier noting that the carrier received the Products from Omron in the condition claimed.
13. Warranties. (a) Exclusive Warranty. Omron's exclusive warranty is that the Products will be free from defects in materials and workmanship for a period of twelve months from the date of sale by Omron (or such other period expressed in writing by Omron). Omron disclaims all other warranties, express or implied. (b) Limitations. OMRON MAKES NO WARRANTY OR REPRESENTATION, EXPRESS OR IMPLIED, ABOUT NON-INFRINGEMENT, MERCHANTABILITY OR FITNESS FOR A PARTICULAR PURPOSE OF THE PRODUCTS. BUYER ACKNOWLEDGES THAT IT ALONE HAS DETERMINED THAT THE PRODUCTS WILL SUITABLY MEET THE REQUIREMENTS OF THEIR INTENDED USE. Omron further disclaims all warranties and responsibility of any type for claims or expenses based on infringement by the Products or otherwise of any intellectual property right. (c) Buyer Remedy. Omron's sole obligation hereunder shall be, at Omron's election, to (i) replace (in the form originally shipped with Buyer responsible for labor charges for removal or replacement thereof) the non-complying Product, (ii) repair the non-complying Product, or (iii) repay or credit Buyer an amount equal to the purchase price of the non-complying Product; provided that in no event shall Omron be responsible for warranty, repair, indemnity or any other claims or expenses regarding the Products unless Omron's analysis confirms that the Products were properly handled, stored, installed and maintained and not subject to contamination, abuse, misuse or inappropriate modification. Return of any Products by Buyer must be approved in writing by Omron before shipment. Omron Companies shall not be liable for the suitability or unsuitability or the results from the use of Products in combination with any electrical or electronic components, circuits, system assemblies or any other materials or substances or environments. Any advice, recommendations or information given orally or in writing, are not to be construed as an amendment or addition to the above warranty. See http://www.omron247.com or contact your Omron representative for published information.
14. Limitation on Liability; Etc. OMRON COMPANIES SHALL NOT BE LIABLE FOR SPECIAL, INDIRECT, INCIDENTAL, OR CONSEQUENTIAL DAMAGES, LOSS OF PROFITS OR PRODUCTION OR COMMERCIAL LOSS IN ANY WAY CONNECTED WITH THE PRODUCTS, WHETHER SUCH CLAIM IS BASED IN CONTRACT, WARRANTY, NEGLIGENCE OR STRICT LIABILITY. Further, in no event shall liability of Omron Companies exceed the individual price of the Product on which liability is asserted.
15. Indemnities. Buyer shall indemnify and hold harmless Omron Companies and their employees from and against all liabilities, losses, claims, costs and expenses (including attorney's fees and expenses) related to any claim, investigation, litigation or proceeding (whether or not Omron is a party) which arises or is alleged to arise from Buyer's acts or omissions under these Terms or in any way with respect to the Products. Without limiting the foregoing, Buyer (at its own expense) shall indemnify and hold harmless Omron and defend or settle any action brought against such Companies to the extent based on a claim that any Product made to Buyer specifications infringed intellectual property rights of another party.
16. Property; Confidentiality. Any intellectual property in the Products is the exclusive property of Omron Companies and Buyer shall not attempt to duplicate it in any way without the written permission of Omron. Notwithstanding any charges to Buyer for engineering or tooling, all engineering and tooling shall remain the exclusive property of Omron. All information and materials supplied by Omron to Buyer relating to the Products are confidential and proprietary, and Buyer shall limit distribution thereof to its trusted employees and strictly prevent disclosure to any third party.
17. Export Controls. Buyer shall comply with all applicable laws, regulations and licenses regarding (i) export of products or information; (iii) sale of products to "forbidden" or other proscribed persons; and (ii) disclosure to non-citizens of regulated technology or information.
18. Miscellaneous. (a) Waiver. No failure or delay by Omron in exercising any right and no course of dealing between Buyer and Omron shall operate as a waiver of rights by Omron. (b) Assignment. Buyer may not assign its rights hereunder without Omron's written consent. (c) Law. These Terms are governed by the law of the jurisdiction of the home office of the Omron company from which Buyer is purchasing the Products (without regard to conflict of law principles). (d) Amendment. These Terms constitute the entire agreement between Buyer and Omron relating to the Products, and no provision may be changed or waived unless in writing signed by the parties. (e) Severability. If any provision hereof is rendered ineffective or invalid, such provision shall not invalidate any other provision. (f) Setoff. Buyer shall have no right to set off any amounts against the amount owing in respect of this invoice. (g) Definitions. As used herein, "including" means "including without limitation"; and "Omron Companies" (or similar words) mean Omron Corporation and any direct or indirect subsidiary or affiliate thereof.

Certain Precautions on Specifications and Use

1. Suitability of Use. Omron Companies shall not be responsible for conformity with any standards, codes or regulations which apply to the combination of the Product in the Buyer's application or use of the Product. At Buyer's request, Omron will provide applicable third party certification documents identifying ratings and limitations of use which apply to the Product. This information by itself is not sufficient for a complete determination of the suitability of the Product in combination with the end product, machine, system, or other application or use. Buyer shall be solely responsible for determining appropriateness of the particular Product with respect to Buyer's application, product or system. Buyer shall take application responsibility in all cases but the following is a non-exhaustive list of applications for which particular attention must be given:
   (i) Outdoor use, uses involving potential chemical contamination or electrical interference, or conditions or uses not described in this document.
   (ii) Use in consumer products or any use in significant quantities.
   (iii) Energy control systems, combustion systems, railroad systems, aviation systems, medical equipment, amusement machines, vehicles, safety equipment, and installations subject to separate industry or government regulations.
   (iv) Systems, machines and equipment that could present a risk to life or property. Please know and observe all prohibitions of use applicable to this Product.
   NEVER USE THE PRODUCT FOR AN APPLICATION INVOLVING SERIOUS RISK TO LIFE OR PROPERTY OR IN LARGE QUANTITIES WITHOUT ENSURING THAT THE SYSTEM AS A WHOLE HAS BEEN DESIGNED TO ADDRESS THE RISKS, AND THAT THE OMRON'S PRODUCT IS PROPERLY RATED AND INSTALLED FOR THE INTENDED USE WITHIN THE OVERALL EQUIPMENT OR SYSTEM.
2. Programmable Products. Omron Companies shall not be responsible for the user's programming of a programmable Product, or any consequence thereof.
3. Performance Data. Data presented in Omron Company websites, catalogs and other materials is provided as a guide for the user in determining suitability and does not constitute a warranty. It may represent the result of Omron's test conditions, and the user must correlate it to actual application requirements. Actual performance is subject to the Omron's Warranty and Limitations of Liability.
4. Change in Specifications. Product specifications and accessories may be changed at any time based on improvements and other reasons. It is our practice to change part numbers when published ratings or features are changed, or when significant construction changes are made. However, some specifications of the Product may be changed without any notice. When in doubt, special part numbers may be assigned to fix or establish key specifications for your application. Please consult with your Omron's representative at any time to confirm actual specifications of purchased Product.
5. Errors and Omissions. Information presented by Omron Companies has been checked and is believed to be accurate; however, no responsibility is assumed for clerical, typographical or proofreading errors or omissions.

SYSMAC

SAFETY, TECHNOLOGY & INNOVATION

OMRON AUTOMATION & SAFETY

OMRON AUTOMATION AND SAFETY • THE AMERICAS HEADQUARTERS • Hoffman Estates, IL USA • 847.843.7900 • 800.556.6766 • www.omron247.com

OMRON CANADA, INC. • HEAD OFFICE
Toronto, ON, Canada • 416.286.6465 • 866.986.6766 • www.omron247.com

OMRON ELECTRONICS DE MEXICO • HEAD OFFICE
México DF • 52.55.59.01.43.00 • 01-800-226-6766 • mela@omron.com

OMRON ELECTRONICS DE MEXICO • SALES OFFICE
Apodaca, N.L. • 52.81.11.56.99.20 • 01-800-226-6766 • mela@omron.com

OMRON ELETRÔNICA DO BRASIL LTDA • HEAD OFFICE
São Paulo, SP, Brasil • 55.11.2101.6300 • www.omron.com.br

OMRON ARGENTINA • SALES OFFICE
Cono Sur • 54.11.4783.5300

OMRON CHILE • SALES OFFICE
Santiago • 56.9.9917.3920

OTHER OMRON LATIN AMERICA SALES
54.11.4783.5300

OMRON EUROPE B.V. • Wegalaan 67-69, NL-2132 JD, Hoofddorp, The Netherlands. • +31 (0) 23 568 13 00 • www.industrial.omron.eu

Authorized Distributor:

Automation Control Systems
• Machine Automation Controllers (MAC) • Programmable Controllers (PLC)
• Operator interfaces (HMI) • Distributed I/O • Software

Drives & Motion Controls
• Servo & AC Drives • Motion Controllers & Encoders

Temperature & Process Controllers
• Single and Multi-loop Controllers

Sensors & Vision
• Proximity Sensors • Photoelectric Sensors • Fiber-Optic Sensors
• Amplified Photomicrosensors • Measurement Sensors
• Ultrasonic Sensors • Vision Sensors

Industrial Components
• RFID/Code Readers • Relays • Pushbuttons & Indicators
• Limit and Basic Switches • Timers • Counters • Metering Devices
• Power Supplies

Safety
• Laser Scanners • Safety Mats • Edges and Bumpers • Programmable Safety Controllers • Light Curtains • Safety Relays • Safety Interlock Switches

F3SJ-B F24I-E-01 Note: Specifications are subject to change.

© 2014 Omron Electronics LLC

Printed in U.S.A.

Printed on recycled paper.

Компания «ЭлектроПласт» предлагает заключение долгосрочных отношений при поставках импортных электронных компонентов на взаимовыгодных условиях!

Наши преимущества:

- Оперативные поставки широкого спектра электронных компонентов отечественного и импортного производства напрямую от производителей и с крупнейших мировых складов;
- Поставка более 17-ти миллионов наименований электронных компонентов;
- Поставка сложных, дефицитных, либо снятых с производства позиций;
- Оперативные сроки поставки под заказ (от 5 рабочих дней);
- Экспресс доставка в любую точку России;
- Техническая поддержка проекта, помощь в подборе аналогов, поставка прототипов;
- Система менеджмента качества сертифицирована по Международному стандарту ISO 9001;
- Лицензия ФСБ на осуществление работ с использованием сведений, составляющих государственную тайну;
- Поставка специализированных компонентов (Xilinx, Altera, Analog Devices, Intersil, Interpoint, Microsemi, Aeroflex, Peregrine, Syfer, Eurofarad, Texas Instrument, Miteq, Cobham, E2V, MA-COM, Hittite, Mini-Circuits,General Dynamics и др.);

Помимо этого, одним из направлений компании «ЭлектроПласт» является направление «Источники питания». Мы предлагаем Вам помощь Конструкторского отдела:

- Подбор оптимального решения, техническое обоснование при выборе компонента;
- Подбор аналогов;
- Консультации по применению компонента;
- Поставка образцов и прототипов;
- Техническая поддержка проекта;
- Защита от снятия компонента с производства.

Как с нами связаться

Телефон: 8 (812) 309 58 32 (многоканальный)
Факс: 8 (812) 320-02-42
Электронная почта: org@eplast1.ru
Адрес: 198099, г. Санкт-Петербург, ул. Калинина, дом 2, корпус 4, литера А.