THIS DRAWING IS UNPUBLISHED. RELEASED FOR PUBLICATION -
© COPYRIGHT copyright.dgkc- ALL RIGHTS RESERVED.

LOC	DIST
-	-

REVISIONS

P	LTR	DESCRIPTION	DATE	DWN	APVD
	A	RELEASE	01NOV2016	JY	SH
	B	REVISED PER ECO-17-011899	15AUG2017	RG	SH

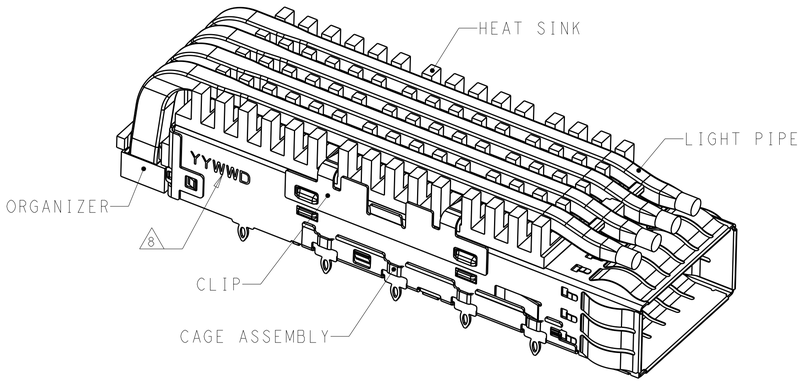

4-2170705-2 SHOWN
SCALE 3:1

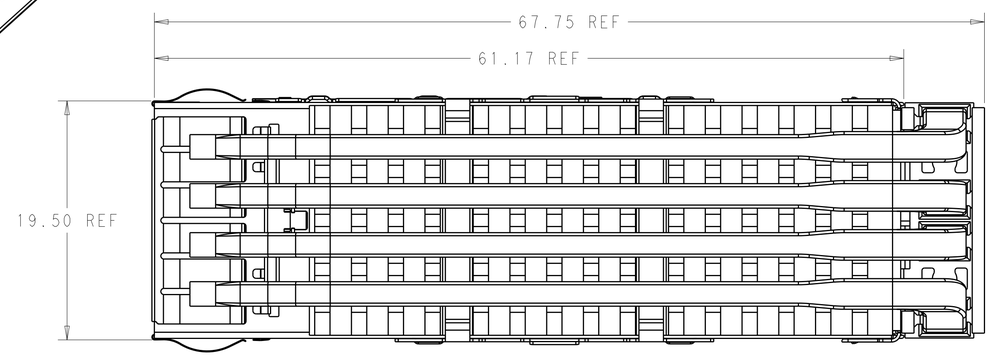

1. MATERIAL: CAGE MATERIAL : 0.25 THICK NICKEL SILVER.
SPRING MATERIAL: COPPER ALLOY
HEAT SINK MATERIAL: ALUMINUM
CLIP MATERIAL: STAINLESS STEEL
LIGHT PIPE MATERIAL: POLYCARBONATE
ORGANIZER MATERIAL: POLYESTER

2. FINISH: SPRING: NICKEL PLATING
HEAT SINK: BLACK ANODIZE

3. DIMENSION APPLIES WITH MODULE INSTALLED IN THE CAGE TO TOP OF HEAT SINK.

4. REFERENCE APPLICATION SPEC 114-32023 FOR RECOMMENDED DRILL HOLE DIAMETER AND PLATING THICKNESS.

5. DATUM AND BASIC DIMENSIONS ESTABLISHED BY CUSTOMERS.

6. MINIMUM PC BOARD THICKNESS : SINGLES SIDED: 1.57 MIN
DOUBLE SIDED: 2.20 MIN

7. DATUM -A- IS TOP SURFACE OF THE HOST BOARD.

8. DATE CODE (YYWWD) MARKED APPROXIMATELY AS SHOWN

9. THESE HOLES ARE OPTIONAL WHEN THE REAR PINS ARE REMOVED.

10. MATES WITH QSFP28 MSA COMPATIBLE TRANSCEIVER.

11. PRELIMINARY PART - NOT RELEASE TO PRODUCTION.

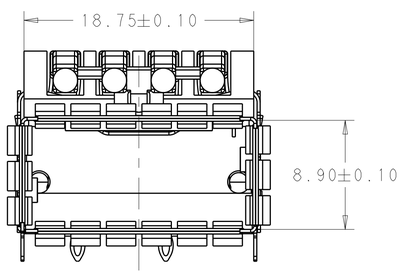

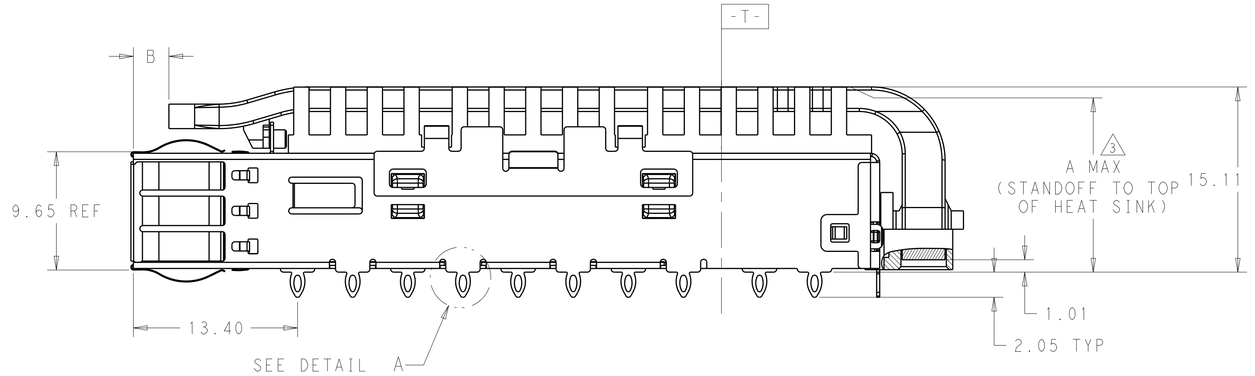

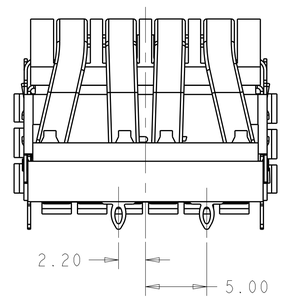

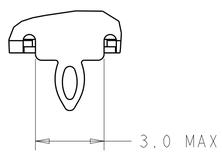

DETAIL A
SCALE 8:1

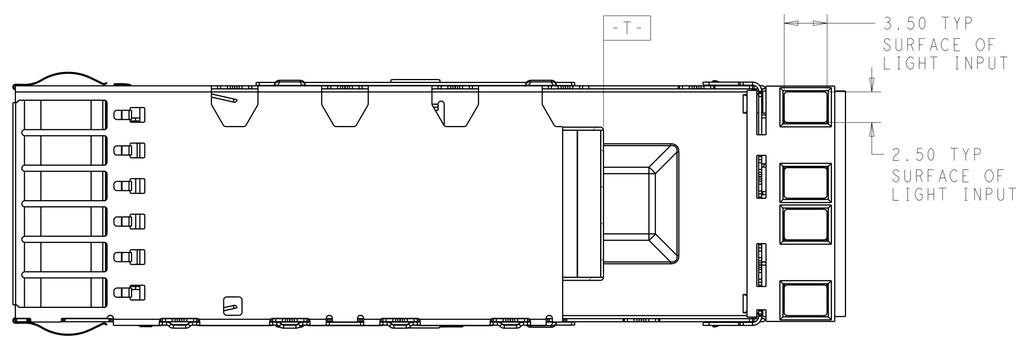

4-2170705-2 AS SHOWN

THIS DRAWING IS A CONTROLLED DOCUMENT.	DWN JASON YANG 07MAR2014	TE Connectivity
	CHK SEAN HAN 26JAN2016	
DIMENSIONS: mm	APVD	NAME CAGE ASSEMBLY, QSFP28, THRU BEZEL WITH EMI SPRING FINGER HEAT SINK, LIGHT PIPE
TOLERANCES UNLESS OTHERWISE SPECIFIED: 0 PLC ±0.25, 1 PLC ±0.25, 2 PLC ±0.20, 3 PLC ±0.100, 4 PLC ±-, ANGLES ±-	PRODUCT SPEC 108-19428	
	APPLICATION SPEC 114-32023	SIZE A1 / CAGE CODE 00779 / DRAWING NO C-2170705 / RESTRICTED TO -
MATERIAL - -	WEIGHT - / FINISH - -	
	CUSTOMER DRAWING	SCALE 2:1 / SHEET 1 OF 7 / REV B

THIS DRAWING IS UNPUBLISHED. RELEASED FOR PUBLICATION -
© COPYRIGHT copyright.dgfe- ALL RIGHTS RESERVED.

LOC	DIST
-	-

REVISIONS

P	LTR	DESCRIPTION	DATE	DWN	APVD
	-	SEE SHEET 1	-	-	-

HEAT SINK OPTIONS

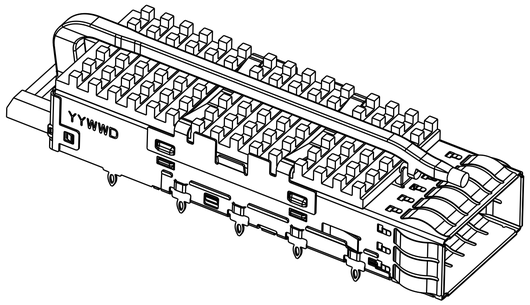

PCI HEAT SINK
SCALE 5:2

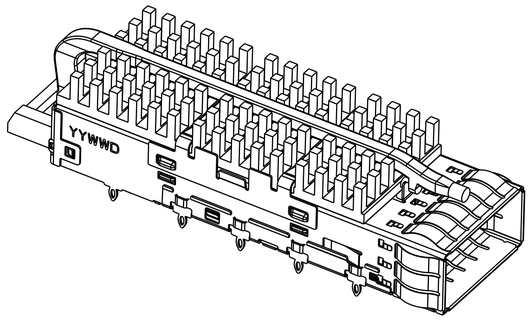

SAN HEAT SINK
SCALE 5:2

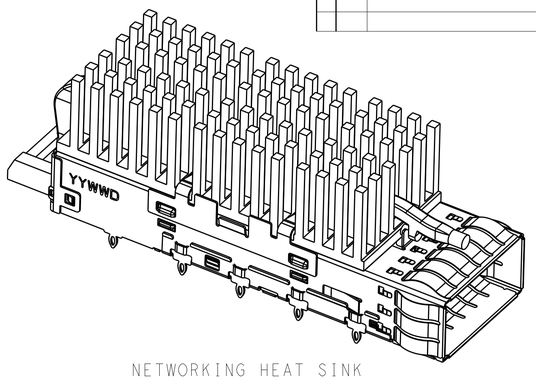

NETWORKING HEAT SINK
SCALE 5:2

OF REAR LEGS OPTIONS

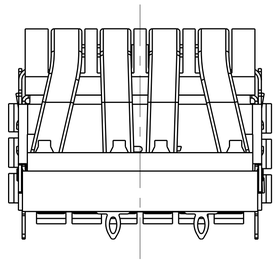

2 REAR LEGS
SCALE 4:1

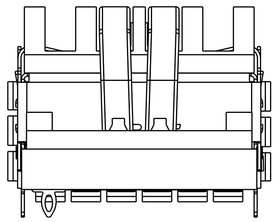

1 REAR LEG
SCALE 4:1

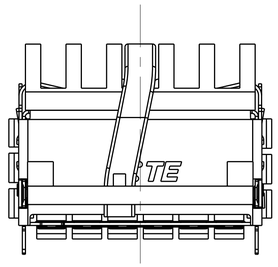

0 REAR LEG
SCALE 4:1

LIGHT PIPE OPTIONS

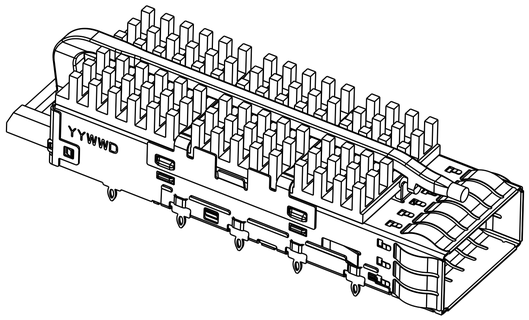

SINGLE LIGHT PIPE
WITHOUT ORGANIZER
SCALE 5:2

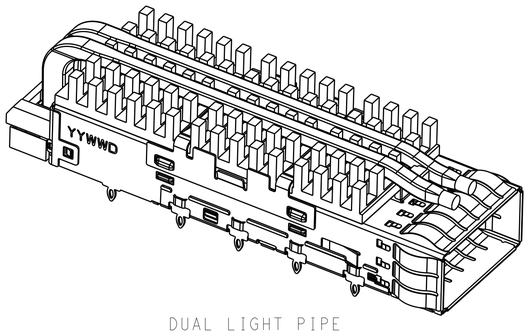

DUAL LIGHT PIPE
SCALE 5:2

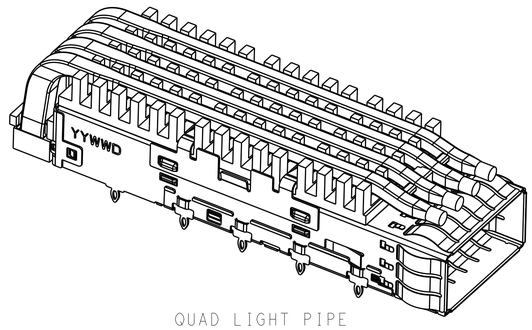

QUAD LIGHT PIPE
SCALE 5:2

THIS DRAWING IS A CONTROLLED DOCUMENT.

DIMENSIONS: mm

TOLERANCES UNLESS OTHERWISE SPECIFIED:
0 PLC ±0.25
1 PLC ±0.25
2 PLC ±0.20
3 PLC ±0.100
4 PLC ±-
ANGLES ±-

MATERIAL - - -
FINISH - - -

DWN JASON YANG 07MAR2014
CHK SEAN HAN 26JAN2016
APVD
PRODUCT SPEC 108-19428
APPLICATION SPEC 114-32023
WEIGHT -

TE Connectivity

NAME CAGE ASSEMBLY, QSFP28, THRU BEZEL WITH EMI SPRING FINGER HEAT SINK, LIGHT PIPE

SIZE	CAGE CODE	DRAWING NO	RESTRICTED TO
A1	00779	C-2170705	-

CUSTOMER DRAWING | SCALE 2:1 | SHEET 2 OF 7 | REV B

4805 (3/11)

THIS DRAWING IS UNPUBLISHED. RELEASED FOR PUBLICATION -
© COPYRIGHT copyright.dgkc- ALL RIGHTS RESERVED.

LOC	DIST
-	-

REVISIONS

P	LTR	DESCRIPTION	DATE	DWN	APVD
	-	SEE SHEET 1	-	-	-

LIGHT PIPE LENGTH OPTIONS

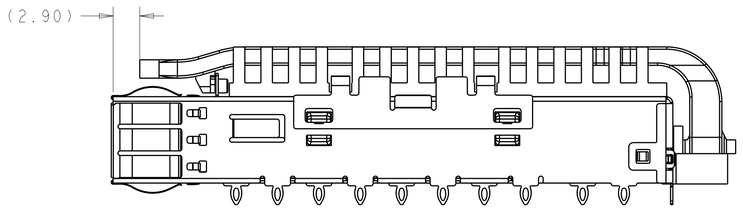

WITH LIGHT PIPE LENGTH B=2.9
SCALE 3:1

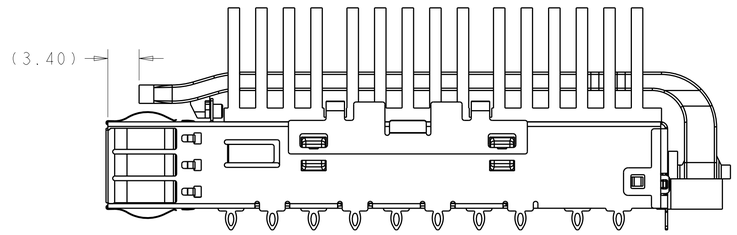

WITH LIGHT PIPE LENGTH B=3.4
SCALE 3:1

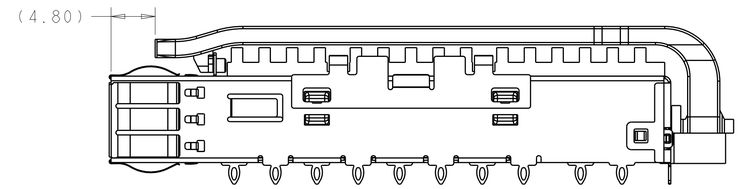

WITH LIGHT PIPE LENGTH B=4.8
SCALE 3:1

BOM

DIM B	# REAR PINS	DIM A	APPLICATION (HEAT SINK OPTION)	LIGHT PIPE OPTION	PART NUMBER
4.8	0	16.00	SAN	DUAL LP	6-2170705-3
5.2	1	16.00	SAN	DUAL LP	6-2170705-2
4.8	2	13.7	PCI	QUAD LP	6-2170705-1 △1
3.4	1	23.0	NETWORKING	QUAD LP	5-2170705-9
2.9	1	16.0	SAN	COATED QUAD LP	5-2170705-8
	1	13.7	PCI	COATED QUAD LP	5-2170705-7
	0	31.6	CUSTOMIZED	QUAD LP	5-2170705-1
	1	23.0	NETWORKING	QUAD LP	4-2170705-9
	1	16.0	SAN	QUAD LP	4-2170705-8
	1	13.7	PCI	QUAD LP	4-2170705-7
	0	23.0	NETWORKING	QUAD LP	4-2170705-6
	0	16.0	SAN	QUAD LP	4-2170705-5
	0	13.7	PCI	QUAD LP	4-2170705-4
	2	23.0	NETWORKING	QUAD LP	4-2170705-3
	2	16.0	SAN	QUAD LP	4-2170705-2
	2	13.7	PCI	QUAD LP	4-2170705-1
	1	23.0	NETWORKING	DUAL LP	2-2170705-9
	1	16.0	SAN	DUAL LP	2-2170705-8
	1	13.7	PCI	DUAL LP	2-2170705-7
	0	23.0	NETWORKING	DUAL LP	2-2170705-6
	0	16.0	SAN	DUAL LP	2-2170705-5
	0	13.7	PCI	DUAL LP	2-2170705-4
	2	23.0	NETWORKING	DUAL LP	2-2170705-3
	2	16.0	SAN	DUAL LP	2-2170705-2
	2	13.7	PCI	DUAL LP	2-2170705-1
	1	23.0	NETWORKING	SINGLE LP	2170705-9
	1	16.0	SAN	SINGLE LP	2170705-8
	1	13.7	PCI	SINGLE LP	2170705-7
	0	23.0	NETWORKING	SINGLE LP	2170705-6
	0	16.0	SAN	SINGLE LP	2170705-5
	0	13.7	PCI	SINGLE LP	2170705-4
	2	23.0	NETWORKING	SINGLE LP	2170705-3
	2	16.0	SAN	SINGLE LP	2170705-2
	2	13.7	PCI	SINGLE LP	2170705-1

THIS DRAWING IS A CONTROLLED DOCUMENT.

DIMENSIONS: mm

TOLERANCES UNLESS OTHERWISE SPECIFIED:
0 PLC ±0.25
1 PLC ±0.25
2 PLC ±0.20
3 PLC ±0.100
4 PLC ±
ANGLES ±

MATERIAL - -
FINISH - -

DWN JASON YANG 07MAR2014
CHK SEAN HAN 26JAN2016
APVD
PRODUCT SPEC 108-19428
APPLICATION SPEC 114-32023
WEIGHT -

TE Connectivity

NAME CAGE ASSEMBLY, QSFP28, THRU BEZEL WITH EMI SPRING FINGER HEAT SINK, LIGHT PIPE

SIZE	CAGE CODE	DRAWING NO	RESTRICTED TO
A1	00779	C-2170705	-

CUSTOMER DRAWING | SCALE 2:1 | SHEET 3 OF 7 | REV B

4805 (3/11)

THIS DRAWING IS UNPUBLISHED. RELEASED FOR PUBLICATION -
© COPYRIGHT copyright.dgkc- ALL RIGHTS RESERVED.

LOC	DIST
-	-

REVISIONS

P	LTR	DESCRIPTION	DATE	DWN	APVD
	-	SEE SHEET 1	-	-	-

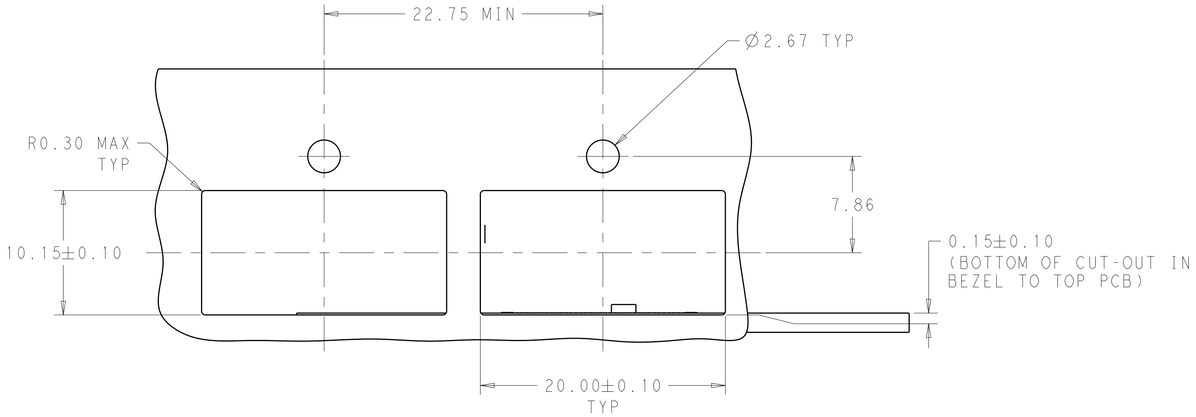

SINGLE LIGHT PIPE TYPE

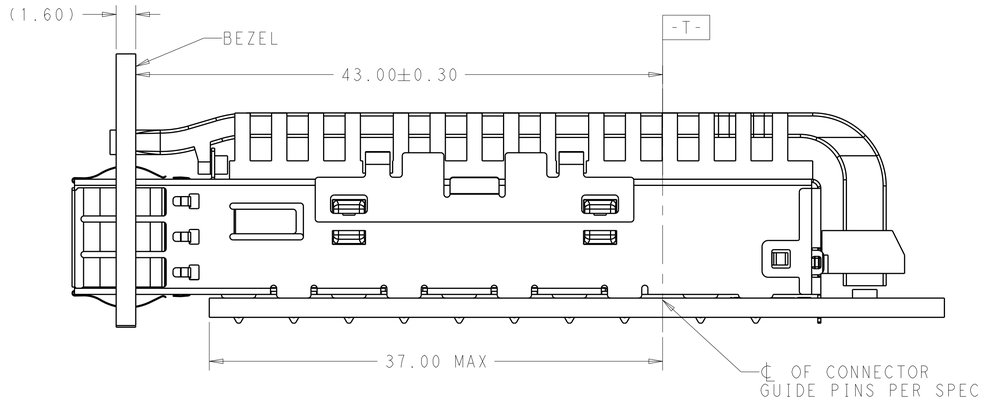

SINGLE SIDE MOUNTING
SCALE 4:1

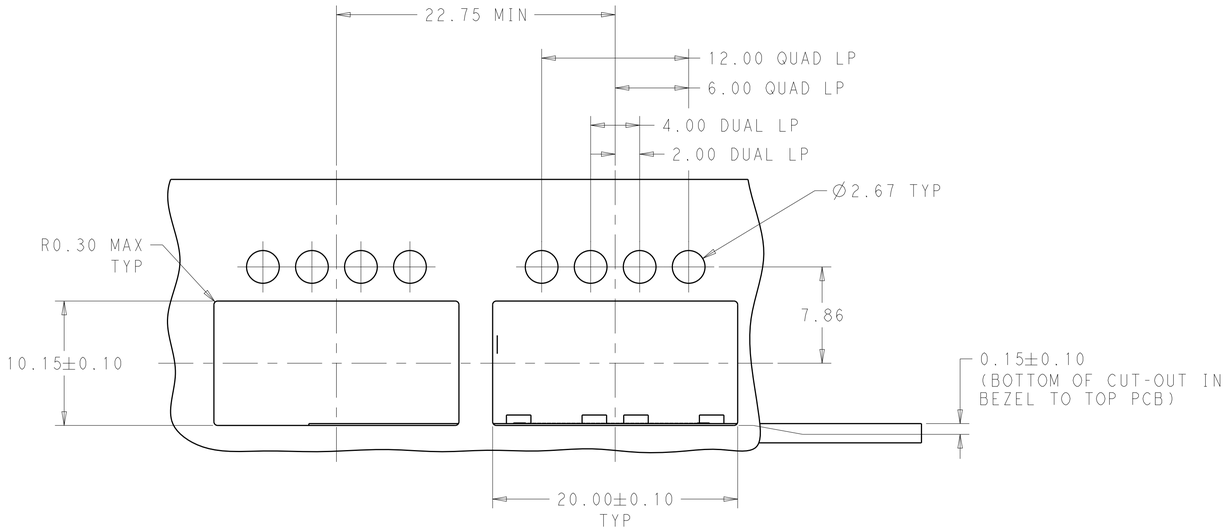

DUAL/QUAD LIGHT PIPE TYPE

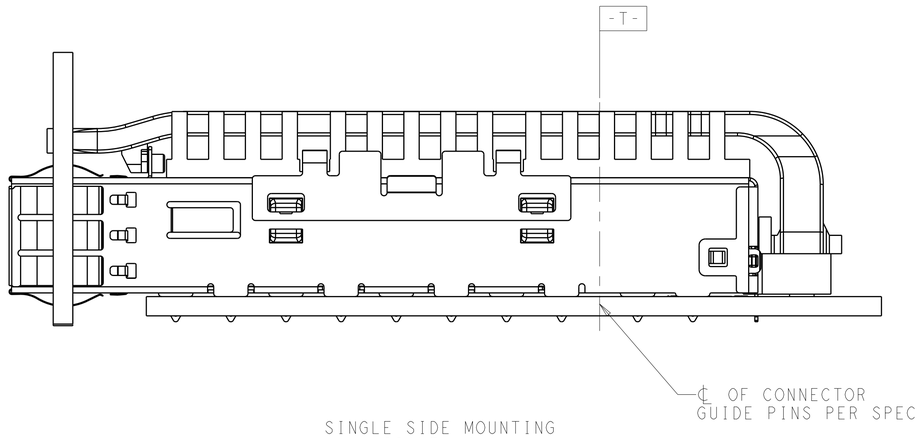

SINGLE SIDE MOUNTING
SCALE 4:1

THIS DRAWING IS A CONTROLLED DOCUMENT.

DIMENSIONS: mm

TOLERANCES UNLESS OTHERWISE SPECIFIED:
0 PLC ±0.25
1 PLC ±0.25
2 PLC ±0.20
3 PLC ±0.100
4 PLC
ANGLES ±

MATERIAL - -
FINISH - -

DWN JASON YANG 07MAR2014
CHK SEAN HAN 26JAN2016
APVD

PRODUCT SPEC 108-19428
APPLICATION SPEC 114-32023
WEIGHT -

CUSTOMER DRAWING

TE Connectivity

NAME
CAGE ASSEMBLY, QSFP28, THRU BEZEL
WITH EMI SPRING FINGER
HEAT SINK, LIGHT PIPE

SIZE	CAGE CODE	DRAWING NO	RESTRICTED TO
A1	00779	C-2170705	-

SCALE 2:1 SHEET 4 OF 7 REV B

THIS DRAWING IS UNPUBLISHED. RELEASED FOR PUBLICATION -
© COPYRIGHT copyright.dgkc- ALL RIGHTS RESERVED.

LOC	DIST
-	-

REVISIONS

P	LTR	DESCRIPTION	DATE	DWN	APVD
	-	SEE SHEET 1	-	-	-

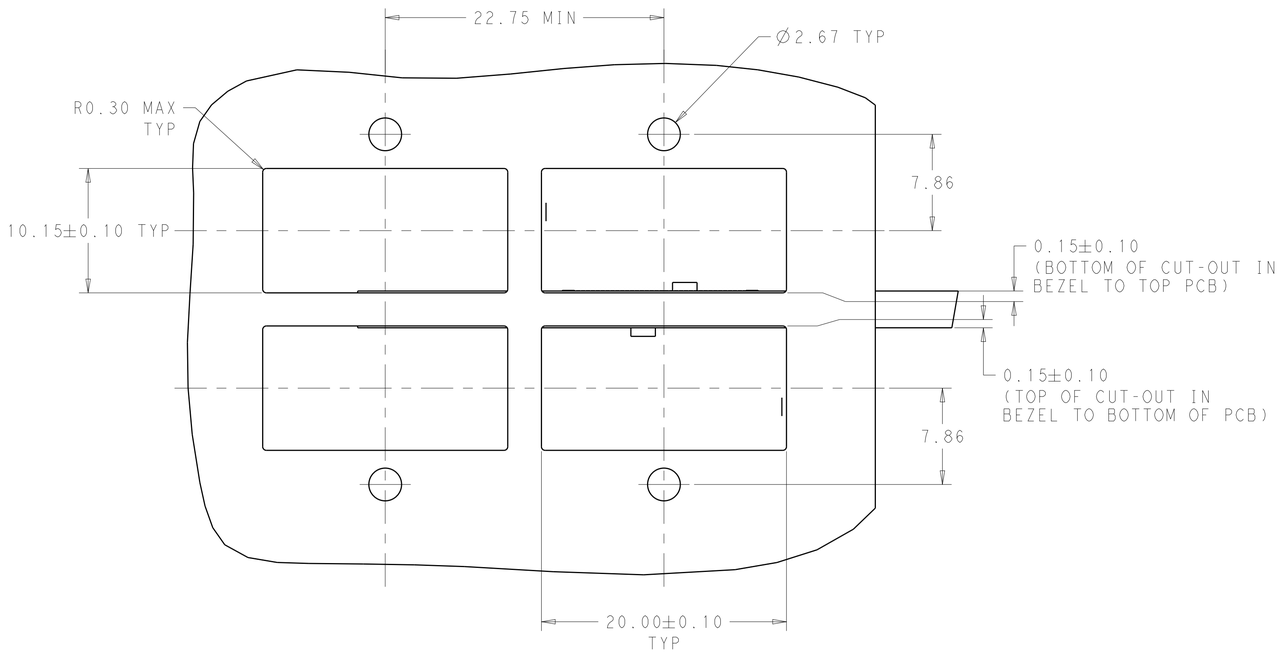

SINGLE LIGHT PIPE TYPE

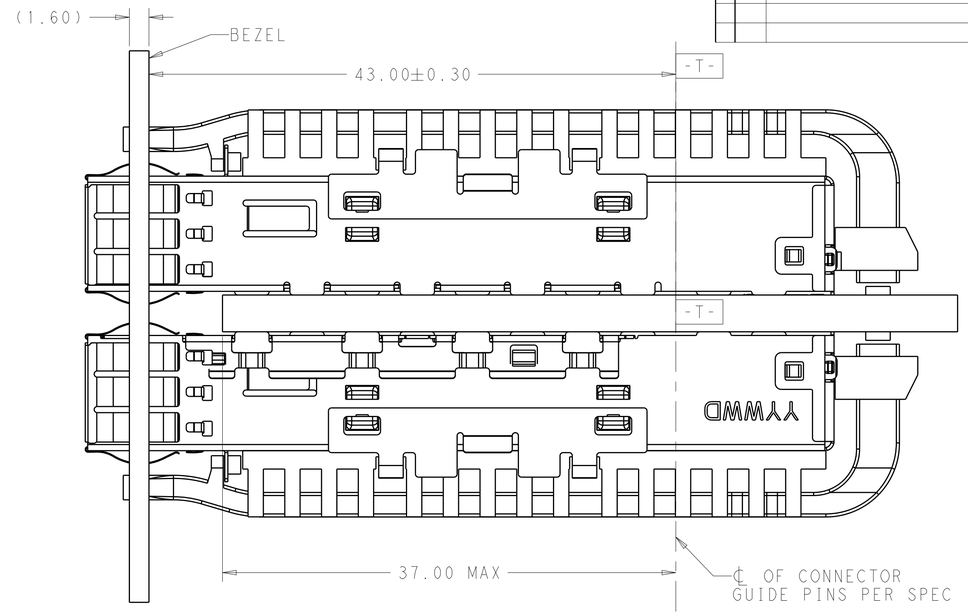

BELLY TO BELLY MOUNTING
SCALE 4:1

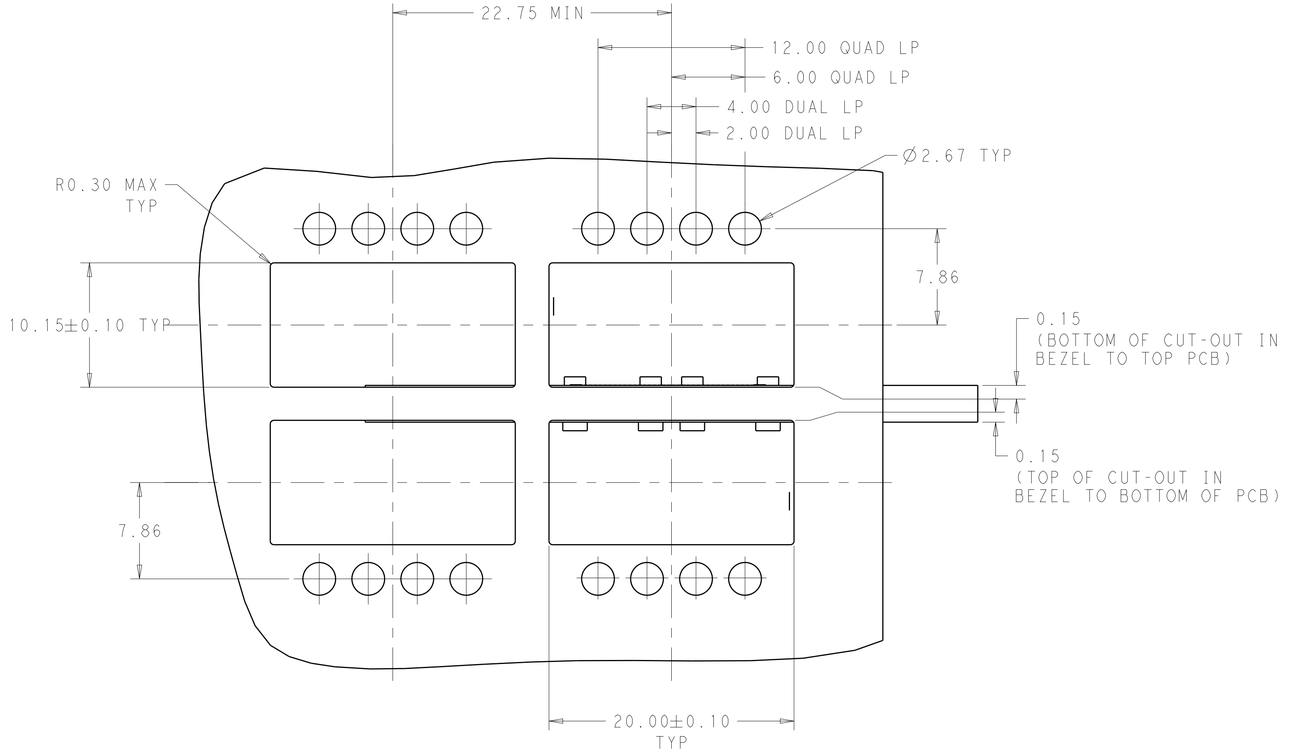

DUAL/QUAD LIGHT PIPE TYPE

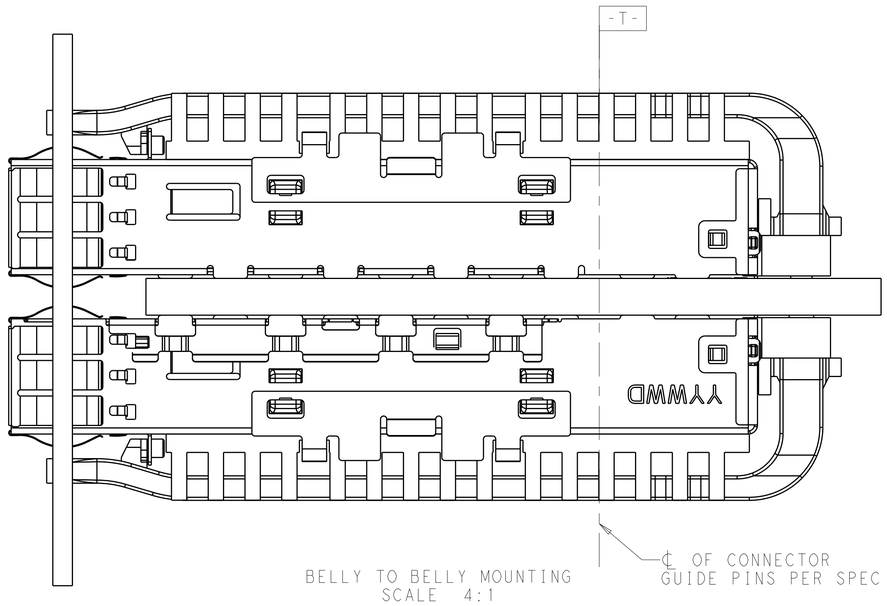

BELLY TO BELLY MOUNTING
SCALE 4:1

THIS DRAWING IS A CONTROLLED DOCUMENT.

DIMENSIONS: mm

TOLERANCES UNLESS OTHERWISE SPECIFIED:

0 PLC	±0.25
1 PLC	±0.25
2 PLC	±0.20
3 PLC	±0.100
4 PLC	±-
ANGLES	±-

MATERIAL - -

FINISH - -

DWN JASON YANG 07MAR2014
CHK SEAN HAN 26JAN2016
APVD

PRODUCT SPEC 108-19428
APPLICATION SPEC 114-32023
WEIGHT -

TE Connectivity

NAME CAGE ASSEMBLY, QSFP28, THRU BEZEL WITH EMI SPRING FINGER HEAT SINK, LIGHT PIPE

SIZE	CAGE CODE	DRAWING NO	RESTRICTED TO
A1	00779	C-2170705	-

CUSTOMER DRAWING | SCALE 2:1 | SHEET 5 OF 7 | REV B

4805 (3/11)

THIS DRAWING IS UNPUBLISHED. RELEASED FOR PUBLICATION -
© COPYRIGHT copyright.dgfe- ALL RIGHTS RESERVED.

LOC	DIST
-	-

REVISIONS

P	LTR	DESCRIPTION	DATE	DWN	APVD
	-	SEE SHEET 1	-	-	-

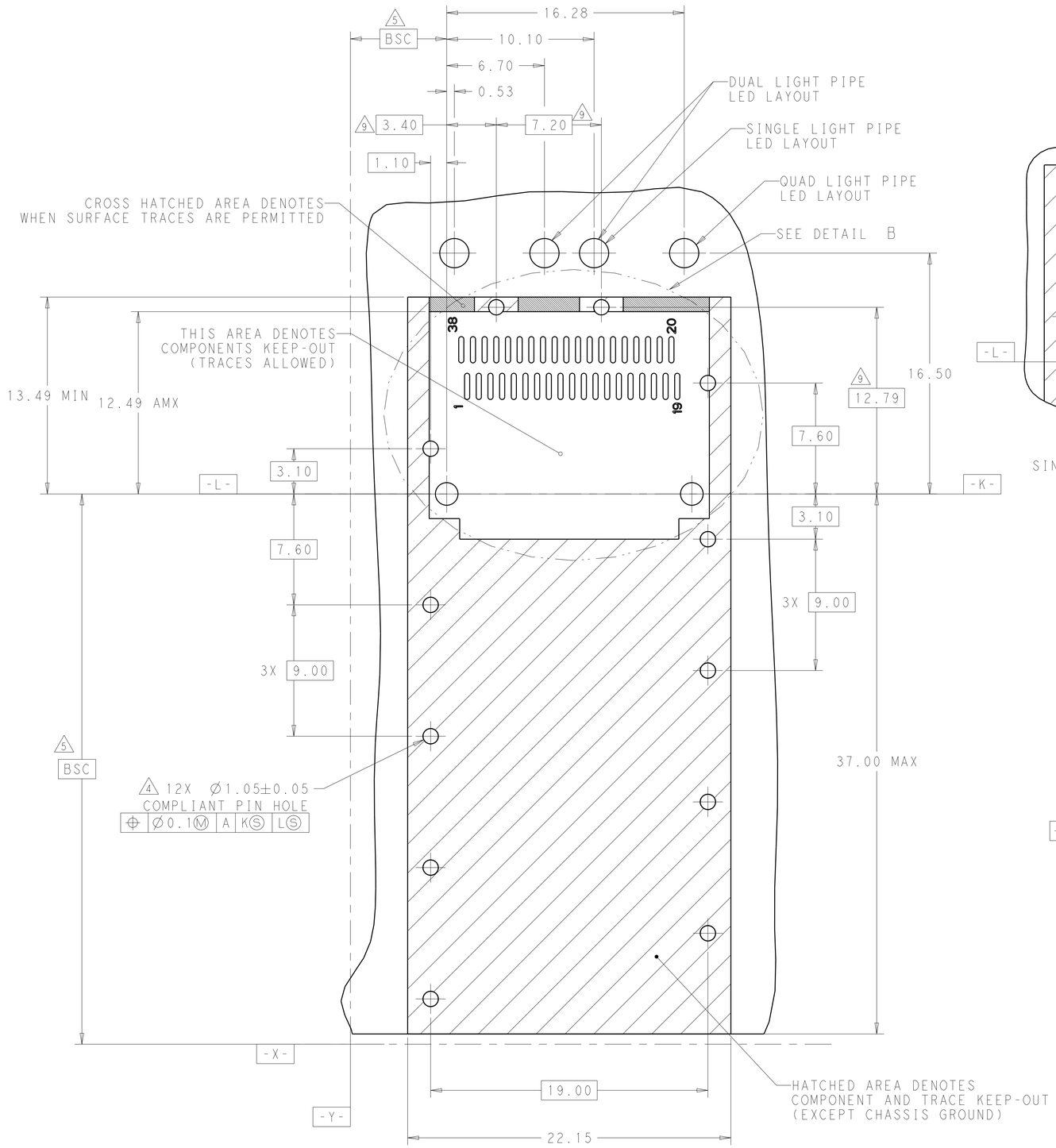

RECOMMENDED PCB LAYOUT
SINGLE TYPE OF 2 REAR HOLES OF LEGS
PCB TOLERANCE: ±0.05
SCALE 6:1

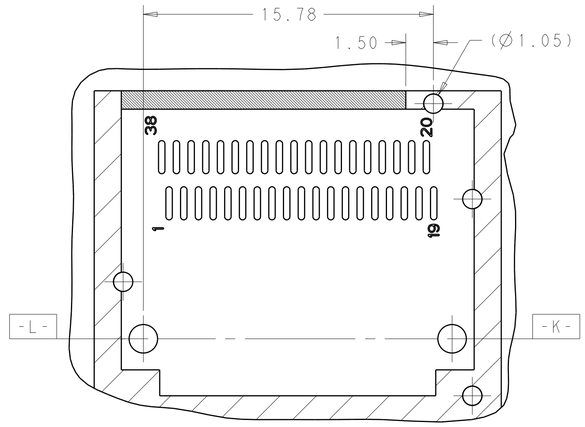

RECOMMENDED PCB LAYOUT
SINGLE TYPE OF 1 REAR HOLES OF LEGS
PCB TOLERANCE: ±0.05
SCALE 6:1

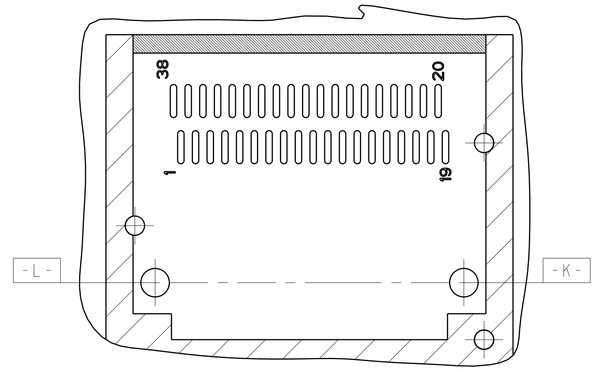

RECOMMENDED PCB LAYOUT
SINGLE TYPE OF 0 REAR HOLES OF LEGS
PCB TOLERANCE: ±0.05
SCALE 6:1

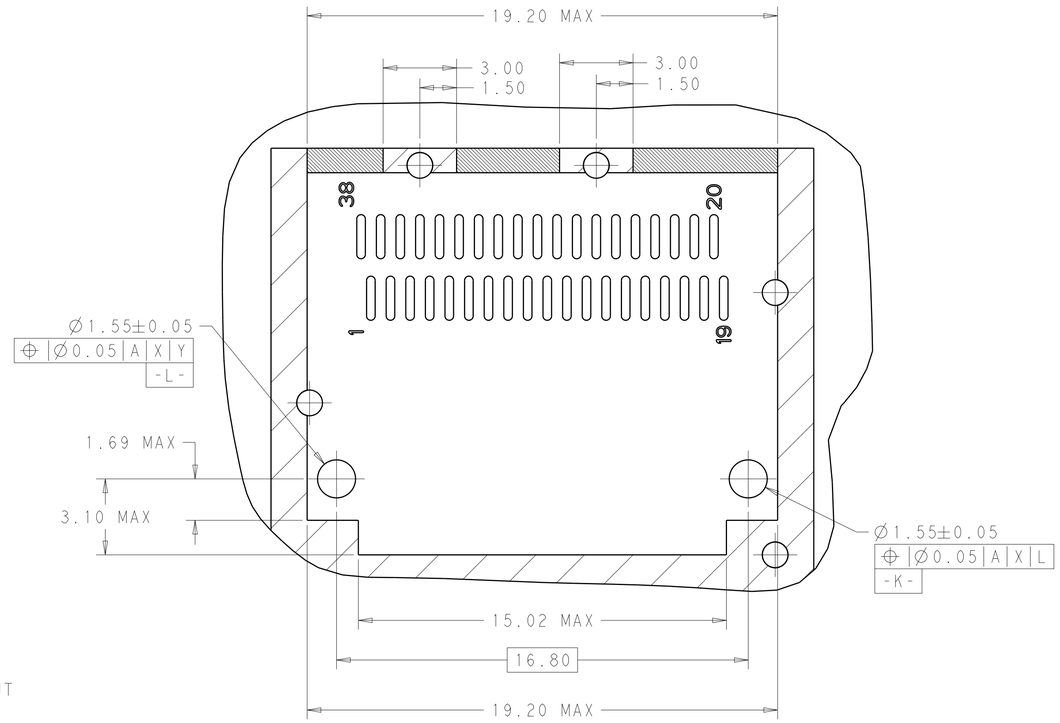

DETAIL B
SCALE 8:1

THIS DRAWING IS A CONTROLLED DOCUMENT.

DIMENSIONS: mm

TOLERANCES UNLESS OTHERWISE SPECIFIED:
0 PLC ±0.25
1 PLC ±0.25
2 PLC ±0.20
3 PLC ±0.100
4 PLC ±
ANGLES ±

MATERIAL -
FINISH -

DWN JASON YANG 07MAR2014
CHK SEAN HAN 26JAN2016
APVD
PRODUCT SPEC 108-19428
APPLICATION SPEC 114-32023
WEIGHT -

TE Connectivity

NAME CAGE ASSEMBLY, QSFP28, THRU BEZEL WITH EMI SPRING FINGER HEAT SINK, LIGHT PIPE

SIZE	CAGE CODE	DRAWING NO	RESTRICTED TO
A1	00779	C-2170705	-

CUSTOMER DRAWING SCALE 2:1 SHEET 6 OF 7 REV B

THIS DRAWING IS UNPUBLISHED. RELEASED FOR PUBLICATION -
© COPYRIGHT copyright.dgfe- ALL RIGHTS RESERVED.

LOC	DIST
-	-

REVISIONS

P	LTR	DESCRIPTION	DATE	DWN	APVD
	-	SEE SHEET 1	-	-	-

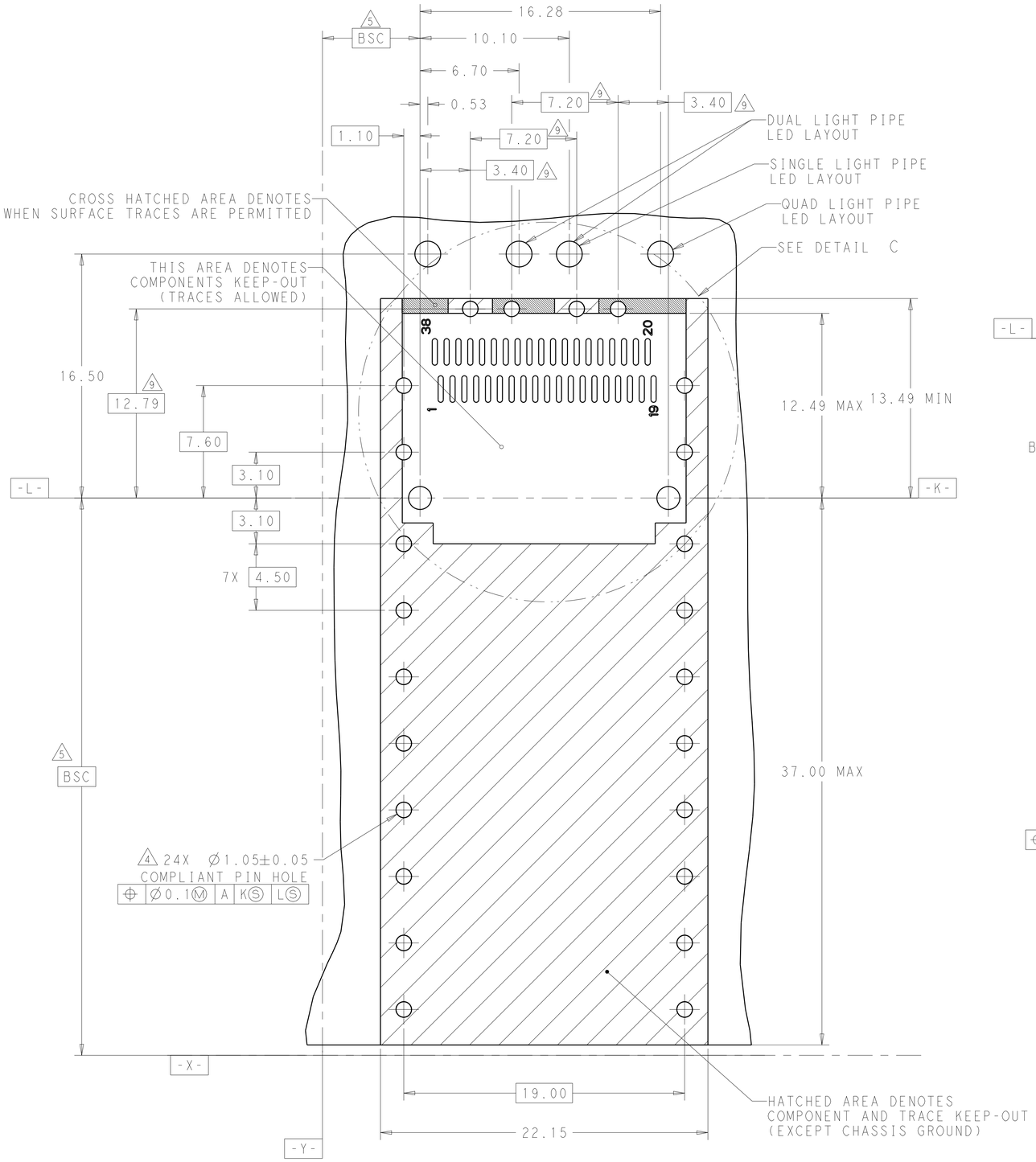

RECOMMENDED PCB LAYOUT
BELLY TO BELLY TYPE OF 2 REAR HOLES OF LEGS
PCB TOLERANCE: ±0.05
SCALE 6:1

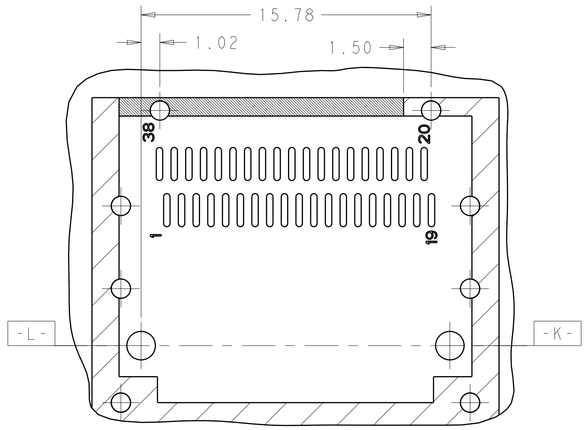

RECOMMENDED PCB LAYOUT
BELLY TO BELLY TYPE OF 1 REAR HOLES OF LEGS
PCB TOLERANCE: ±0.05
SCALE 6:1

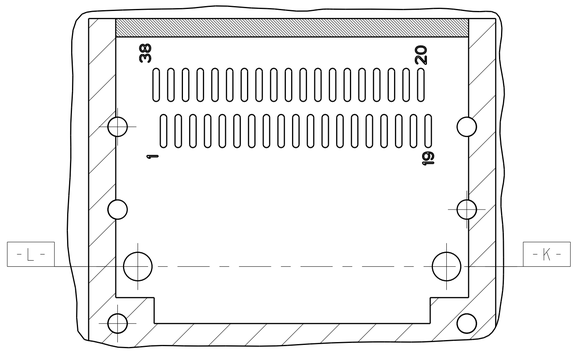

RECOMMENDED PCB LAYOUT
BELLY TO BELLY TYPE OF 0 REAR HOLES OF LEGS
PCB TOLERANCE: ±0.05
SCALE 6:1

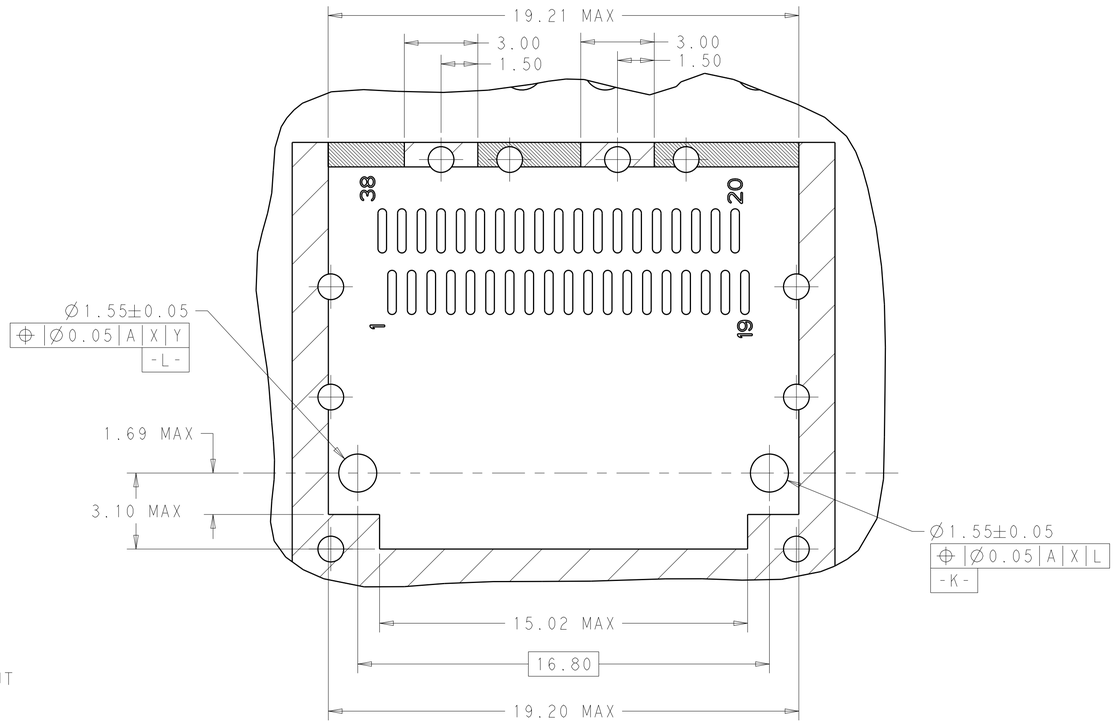

DETAIL C
SCALE 8:1

THIS DRAWING IS A CONTROLLED DOCUMENT.	DWN JASON YANG 07MAR2014	TE Connectivity	
DIMENSIONS: mm	CHK SEAN HAN 26JAN2016	NAME CAGE ASSEMBLY, QSFP28, THRU BEZEL WITH EMI SPRING FINGER HEAT SINK, LIGHT PIPE	
TOLERANCES UNLESS OTHERWISE SPECIFIED: 0 PLC ±0.25; 1 PLC ±0.25; 2 PLC ±0.20; 3 PLC ±0.100; 4 PLC ±; ANGLES ±.	APVD		
	PRODUCT SPEC 108-19428		
	APPLICATION SPEC 114-32023	SIZE A1 / CAGE CODE 00779 / DRAWING NO C-2170705	RESTRICTED TO -
MATERIAL -	WEIGHT -		
FINISH -	CUSTOMER DRAWING	SCALE 2:1 / SHEET 7 OF 7	REV B

4805 (3/11)

Компания «ЭлектроПласт» предлагает заключение долгосрочных отношений при поставках импортных электронных компонентов на взаимовыгодных условиях!

Наши преимущества:

- Оперативные поставки широкого спектра электронных компонентов отечественного и импортного производства напрямую от производителей и с крупнейших мировых складов;
- Поставка более 17-ти миллионов наименований электронных компонентов;
- Поставка сложных, дефицитных, либо снятых с производства позиций;
- Оперативные сроки поставки под заказ (от 5 рабочих дней);
- Экспресс доставка в любую точку России;
- Техническая поддержка проекта, помощь в подборе аналогов, поставка прототипов;
- Система менеджмента качества сертифицирована по Международному стандарту ISO 9001;
- Лицензия ФСБ на осуществление работ с использованием сведений, составляющих государственную тайну;
- Поставка специализированных компонентов (Xilinx, Altera, Analog Devices, Intersil, Interpoint, Microsemi, Aeroflex, Peregrine, Syfer, Eurofarad, Texas Instrument, Miteq, Cobham, E2V, MA-COM, Hittite, Mini-Circuits,General Dynamics и др.);

Помимо этого, одним из направлений компании «ЭлектроПласт» является направление «Источники питания». Мы предлагаем Вам помощь Конструкторского отдела:

- Подбор оптимального решения, техническое обоснование при выборе компонента;
- Подбор аналогов;
- Консультации по применению компонента;
- Поставка образцов и прототипов;
- Техническая поддержка проекта;
- Защита от снятия компонента с производства.

Как с нами связаться

Телефон: 8 (812) 309 58 32 (многоканальный)
Факс: 8 (812) 320-02-42
Электронная почта: org@eplast1.ru
Адрес: 198099, г. Санкт-Петербург, ул. Калинина, дом 2, корпус 4, литера А.