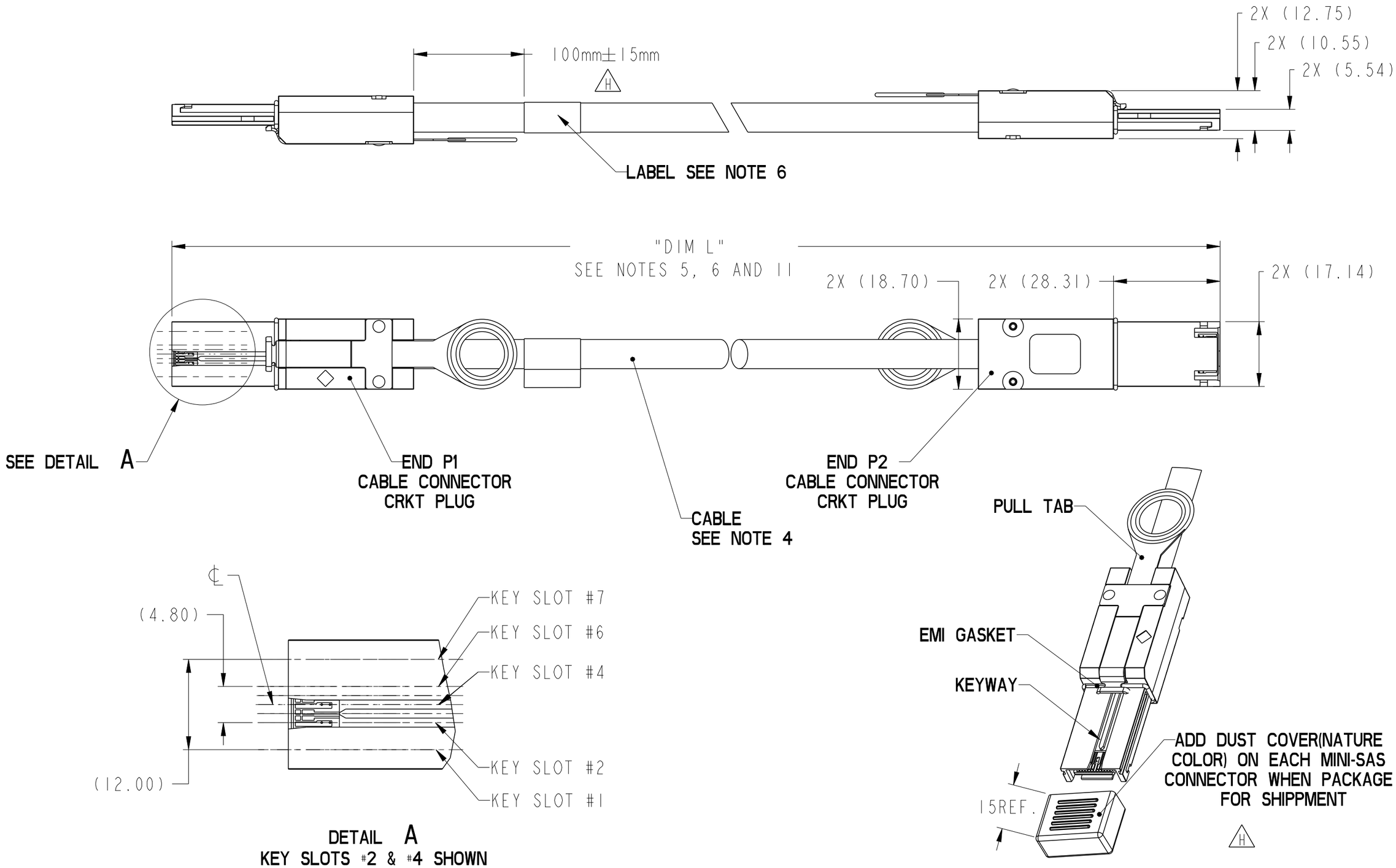

spec ref	---			dr	Stu Stoner	2008/02/05	projection	MM	size A3	scale 1:1
tolerance std --- ---	TOLERANCES UNLESS OTHERWISE SPECIFIED			eng	Tom Feng	2014/09/24				
				chr	-	-			ecn no	ELX-N-18883-1
				appr	Delhly Liu	2014/09/24	product family	MiniSAS/SATA	rel level	Released
surface -	linear	0.X	±0.3	FCI	title	FINAL CABLE ASSEMBLY-ALTERNATE CABLE Mini SAS 2.0/SATA (CRKT)	dwg no	10084749	rev H
		0.XX	±0.10						
		0.XXX	±0.050						
---	angular	0°	±2°°	www.fci.com	cat. no.	-	Product - Customer Drw		sheet 1 of 6

Copyright FCI.

MINI SAS 2.0

PRODUCT NUMBER SEE NOTE 4	HUAWEI PART NUMBER	DESCRIPTION	GAUGE	"DIM L" LENGTH	END P1 KEY SLOT	END P2 KEY SLOT	IDENTIFIER
10084749-M060002LF	/	X4 SAS CABLE ASSEMBLY	24 AWG	6M	4, 6	4, 6	SUBTRACTIVE ROUTING (IN PORT), SAS
10084749-N040002LF	/	X4 SAS CABLE ASSEMBLY	26 AWG	4M	4, 6	4, 6	
10084749-N050002LF	/	X4 SAS CABLE ASSEMBLY	26 AWG	5M	4, 6	4, 6	
10084749-P010002LF	/	X4 SAS CABLE ASSEMBLY	28 AWG	1M	4, 6	4, 6	
10084749-P020002LF	/	X4 SAS CABLE ASSEMBLY	28 AWG	2M	4, 6	4, 6	
10084749-P030002LF	/	X4 SAS CABLE ASSEMBLY	28 AWG	3M	4, 6	4, 6	
10084749-M060003LF	/	X4 SAS CABLE ASSEMBLY	24 AWG	6M	2, 4, 6	2, 4, 6	UNIVERSAL KEY, SAS
10084749-N030003LF	/	X4 SAS CABLE ASSEMBLY	26 AWG	3M	2, 4, 6	2, 4, 6	
10084749-N040003LF	/	X4 SAS CABLE ASSEMBLY	26 AWG	4M	2, 4, 6	2, 4, 6	
10084749-N050003LF	/	X4 SAS CABLE ASSEMBLY	26 AWG	5M	2, 4, 6	2, 4, 6	
10084749-P002503LF	/	X4 SAS CABLE ASSEMBLY	28 AWG	0.25M	2, 4, 6	2, 4, 6	
10084749-P010003LF	/	X4 SAS CABLE ASSEMBLY	28 AWG	1M	2, 4, 6	2, 4, 6	
10084749-P015003LF	/	X4 SAS CABLE ASSEMBLY	28 AWG	1.5M	2, 4, 6	2, 4, 6	
10084749-P020003LF	/	X4 SAS CABLE ASSEMBLY	28 AWG	2M	2, 4, 6	2, 4, 6	
10084749-P025003LF	/	X4 SAS CABLE ASSEMBLY	28 AWG	2.5M	2, 4, 6	2, 4, 6	
10084749-P030003LF	/	X4 SAS CABLE ASSEMBLY	28 AWG	3M	2, 4, 6	2, 4, 6	
10084749-M060006LF	/	X4 SAS CABLE ASSEMBLY	24 AWG	6M	2, 4	4, 6	SAS, TABLE ROUTING (OUT PORT), TO SUBTRACTIVE ROUTING (IN PORT)
10084749-N010006LF	/	X4 SAS CABLE ASSEMBLY	26 AWG	1M	2, 4	4, 6	
10084749-N030006LF	/	X4 SAS CABLE ASSEMBLY	26 AWG	3M	2, 4	4, 6	
10084749-N040006LF	/	X4 SAS CABLE ASSEMBLY	26 AWG	4M	2, 4	4, 6	
10084749-N050006LF	/	X4 SAS CABLE ASSEMBLY	26 AWG	5M	2, 4	4, 6	
10084749-P010006LF	0405G005	X4 SAS CABLE ASSEMBLY	28 AWG	1M	2, 4	4, 6	
10084749-P020006LF	/	X4 SAS CABLE ASSEMBLY	28 AWG	2M	2, 4	4, 6	
10084749-P030006LF	0405G003	X4 SAS CABLE ASSEMBLY	28 AWG	3M	2, 4	4, 6	

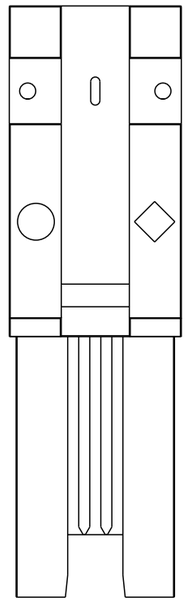

KEY SLOT 2,4 & 6
○ ◇ UNVERSIAL PORT

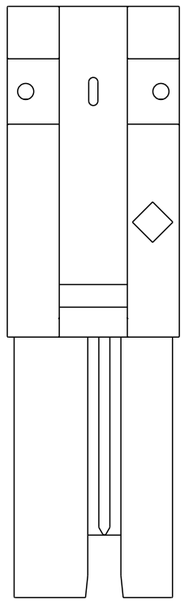

KEY SLOT 2 & 4
◇ OUT PORT

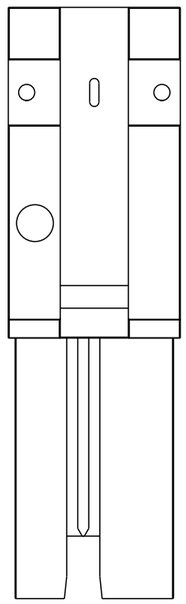

KEY SLOT 4 & 6
○ IN PORT

MINI SAS 2.0 KEYING OPTIONS

spec ref	---			dr	Stu Stoner	2008/02/05	projection	MM
tolerance std	TOLERANCES UNLESS OTHERWISE SPECIFIED			eng	Tom Feng	2014/09/24		
---				chr	-	-		
---				appr	Delhly Liu	2014/09/24	product family	MiniSAS/SATA
surface -	linear	0.X	±0.3	title	FINAL CABLE ASSEMBLY-ALTERNATE CABLE		dwg no	10084749
		0.XX	±0.10		Mini SAS 2.0/SATA (CRKT)			
		0.XXX	±0.050					
---	angular	0°	±2°°	www.fci.com	cat. no.	-	Product - Customer Drw	

size	scale	rev
A3	1:1	H

ecn no: ELX-N-18883-1
rel level: Released
sheet 2 of 6

Copyright FCI.

SATA

PRODUCT NUMBER SEE NOTE 4	DESCRIPTION	GAUGE	"DIM L" LENGTH	END P1 KEY SLOT	END P2 KEY SLOT	IDENTIFIER
10084749-M060004LF	X4 SATA CABLE ASSEMBLY	24 AWG	6M	1,4	1,4	X CABLE, SATA
10084749-N020004LF	X4 SATA CABLE ASSEMBLY	26 AWG	2M	1,4	1,4	
10084749-N040004LF	X4 SATA CABLE ASSEMBLY	26 AWG	4M	1,4	1,4	
10084749-N050004LF	X4 SATA CABLE ASSEMBLY	26 AWG	5M	1,4	1,4	
10084749-P010004LF	X4 SATA CABLE ASSEMBLY	28 AWG	1M	1,4	1,4	
10084749-P030004LF	X4 SATA CABLE ASSEMBLY	28 AWG	3M	1,4	1,4	
10084749-M060005LF	X4 SATA CABLE ASSEMBLY	24 AWG	6M	7	7	M CABLE, SATA
10084749-N020005LF	X4 SATA CABLE ASSEMBLY	26 AWG	2M	7	7	
10084749-N040005LF	X4 SATA CABLE ASSEMBLY	26 AWG	4M	7	7	
10084749-N050005LF	X4 SATA CABLE ASSEMBLY	26 AWG	5M	7	7	
10084749-P010005LF	X4 SATA CABLE ASSEMBLY	28 AWG	1M	7	7	
10084749-P030005LF	X4 SATA CABLE ASSEMBLY	28 AWG	3M	7	7	

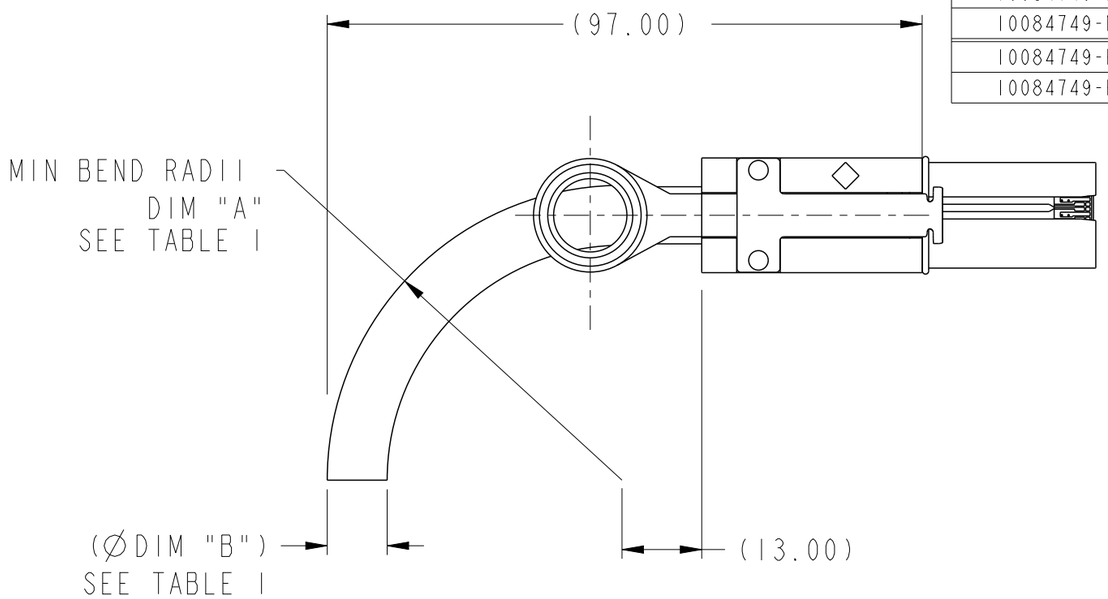

BEND RADIUS
(24 AWG SHOWN)

TABLE 1

CABLE	DIM "A"	DIM "B"
24 AWG	(R46.9)	(∅9.5mm)
26 AWG	(R41.7)	(∅8.3mm)
28 AWG	(R37.7)	(∅7.6mm)

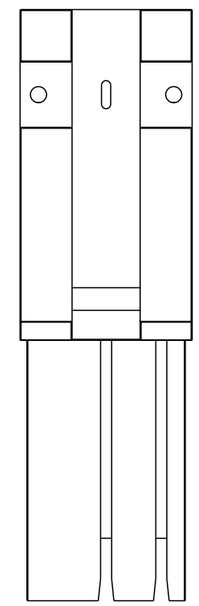

KEY SLOT 1 & 4
X CABLE, SATA

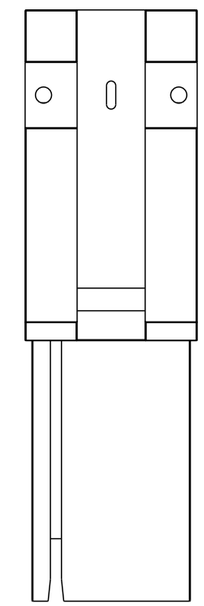

KEY SLOT 7
M CABLE, SATA

SATA KEYING OPTIONS

spec ref	---	dr	Stu Stoner	2008/02/05	projection	MM	size A3 / scale 1:1
tolerance std --- ---	TOLERANCES UNLESS OTHERWISE SPECIFIED	eng	Tom Feng	2014/09/24			ecn no ELX-N-18883-1
		chr	-	-			
		appr	Delhly Liu	2014/09/24	product family	MiniSAS/SATA	rel level Released
surface -	linear 0.X ±0.3 / 0.XX ±0.10 / 0.XXX ±0.050	FCI	title	FINAL CABLE ASSEMBLY-ALTERNATE CABLE Mini SAS 2.0/SATA (CRKT)	dwg no	10084749	rev H
---	angular 0° ±2°°	www.fci.com	cat. no.	-	Product - Customer Drw		sheet 3 of 6

Copyright FCI.

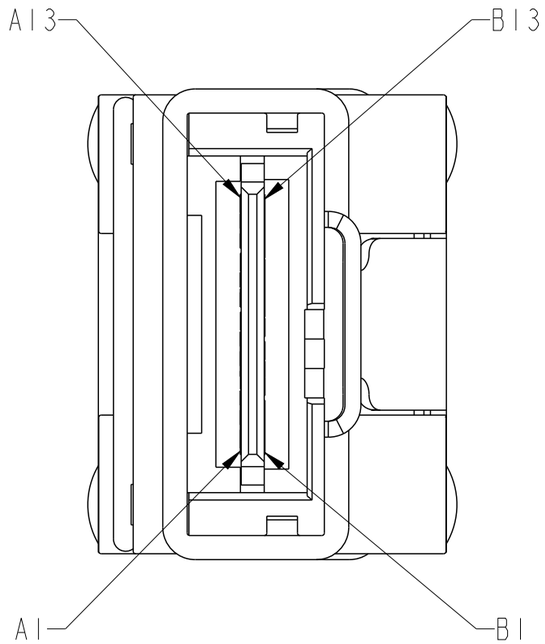

WIRING LIST SEE NOTE 7

P1	GND	A1	—	B1	GND	P2
	Rx 0+	A2	←	B2	Tx 0+	
	Rx 0-	A3		B3	Tx 0-	
	GND	A4	—	B4	GND	
	Rx 1+	A5	←	B5	Tx 1+	
	Rx 1-	A6		B6	Tx 1-	
	GND	A7	—	B7	GND	
	Rx 2+	A8	←	B8	Tx 2+	
	Rx 2-	A9		B9	Tx 2-	
	GND	A10	—	B10	GND	
	Rx 3+	A11	←	B11	Tx 3+	
	Rx 3-	A12		B12	Tx 3-	
	GND	A13	—	B13	GND	
	GND	B1	—	A1	GND	
	Tx 0+	B2	→	A2	Rx 0+	
	Tx 0-	B3		A3	Rx 0-	
	GND	B4	—	A4	GND	
	Tx 1+	B5	→	A5	Rx 1+	
	Tx 1-	B6		A6	Rx 1-	
	GND	B7	—	A7	GND	
	Tx 2+	B8	→	A8	Rx 2+	
	Tx 2-	B9		A9	Rx 2-	
	GND	B10	—	A10	GND	
	Tx 3+	B11	→	A11	Rx 3+	
	Tx 3-	B12		A12	Rx 3-	
	GND	B13	—	A13	GND	

Copyright FCI.

spec ref	---			dr	Stu Stoner	2008/02/05	projection	MM
tolerance std	TOLERANCES UNLESS OTHERWISE SPECIFIED			eng	Tom Feng	2014/09/24		
--- ---				chr	-	-		
				appr	Delhly Liu	2014/09/24	product family	MiniSAS/SATA
surface	linear	0.X	±0.3	title	FINAL CABLE ASSEMBLY-ALTERNATE CABLE Mini SAS 2.0/SATA (CRKT)		dwg no	10084749
		0.XX	±0.10					
		0.XXX	±0.050					
---	angular	0°	±2°°	www.fci.com	cat. no. -		Product - Customer Drw	sheet 4 of 6

size	A3
scale	1:1
ecn no	ELX-N-18883-1
rel level	Released
rev	H

Pro/E File - REV C - 2009-06-09

PDS: Rev :H STATUS:Released Printed: Sep 24, 2014

NOTES:

1 - MATERIAL:
BACK SHELLS: ZINC DIECAST
PULL TAB: MOLDED THERMOPLASTIC
LATCH: STAINLESS STEEL
JET MELT: POLYAMIDE POLYMER

2 - ELECTRICAL PERFORMANCE PER CURRENT REVISION OF SERIAL ATA, T10/1760-D (SAS-2 REQUIREMENTS).

3 - THIS PRODUCT MEETS THE RESTRICTION OF HAZARDOUS SUBSTANCES IN ELECTRICAL AND ELECTRONIC EQUIPMENT (RoHS) DIRECTIVE (2002/95/EC)

4 - PART NUMBER DESCRIPTION

10084749 - X XX XX XX LF

LF: LEAD FREE (SEE NOTE 3 AND 10)

XX: KEY SLOT
01: KEY SLOT 2,4
02: KEY SLOT 4,6
03: KEY SLOT 2,4,6
04: KEY SLOT 1,4
05: KEY SLOT 7
06: P1= KEY SLOT 2,4 P2= KEY SLOT 4,6

XX XX: LENGTH
XX= METERS, XX=CENTIMETERS
0100 = 01 METERS, 00 CENTIMETERS ("DIM L")

X: GAUGE
M: 24 AWG
N: 26 AWG
P: 28 AWG

5 - UNLESS OTHERWISE SPECIFIED ASSEMBLED LENGTH TOLERANCE IS TO BE:
< 1 METER = ±25.0mm
> 1 METER TO 6 METERS = ± 2% OF "DIM L"

Copyright FCI.

spec ref	---			dr	Stu Stoner	2008/02/05	projection	MM	size A3 / scale 1:1
tolerance std --- ---	TOLERANCES UNLESS OTHERWISE SPECIFIED			eng	Tom Feng	2014/09/24			
				chr	-	-			ecn no ELX-N-18883-1
				appr	Delhly Liu	2014/09/24	product family	MiniSAS/SATA	rel level Released
surface -	linear	0.X	±0.3	FCI	title FINAL CABLE ASSEMBLY-ALTERNATE CABLE Mini SAS 2.0/SATA (CRKT)		dwg no 10084749		rev H
		0.XX	±0.10						
		0.XXX	±0.050						
---	angular	0°	±2°°	www.fci.com	cat. no. -		Product - Customer Drw		sheet 5 of 6

Pro/E File - REV C - 2009-06-09

NOTES CONTINUED:

6 - UNLESS OTHERWISE SPECIFIED LABEL POSITION IS TO BE 100mm FROM REAR OF CONNECTOR.
LABEL DETAILS:

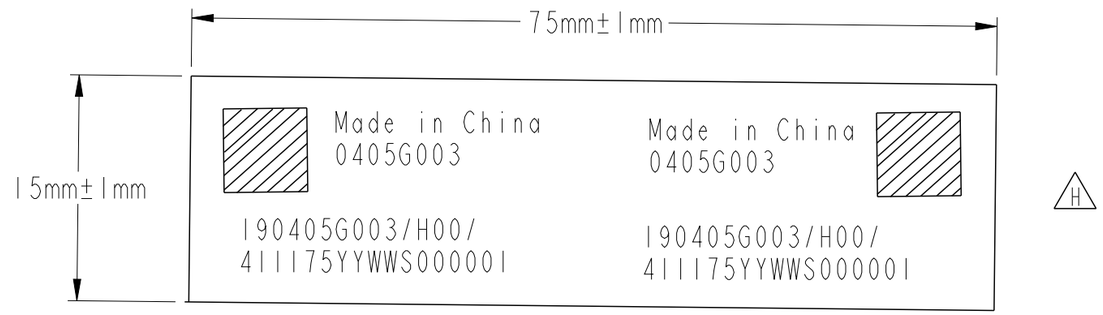

FONT SHALL BE CLEARLY VISIBLE AND BLACK IN COLOR.

7 - ALL CABLE ASSEMBLIES SHALL BE 100% TESTED FOR CONTINUITY AS DEFINED IN WIRING LIST.

8 - UNLESS OTHERWISE SPECIFIED ALL CABLE ASSEMBLIES SHALL BE 100% HI-POT TESTED BY APPLYING 300V DC FOR A MINIUM OF 10ms, UNLESS ACTIVE COMPONENTS ARE USED IN THIS ASSEMBLY.

9 - OTHER TESTING PERFORMED AS REQUIRED BY PRODUCT SPECIFICATION: GS-12-548.

10 - PACKAGING OF LEAD FREE PRODUCTS MEETS LABELING AND PACKAGING PER SPECIFICATION GS-14-920.
PACKAGE CABLE ASSEMBLIES PER GS-14-1272.
ADD DUST COVER ON MINI-SAS CONNECTOR WHEN PACKAGE FOR SHIPPMENT
NEED STICK BELOW LABEL ON PE BAG.

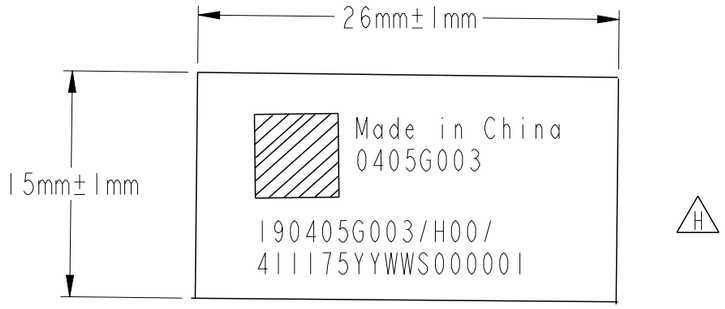

11. THIS DIMENSION IS A FINISHED PRODUCT LENGTH.

12. A "△" SYMBOL WILL BE NEXT TO ANY DIMENSION, VIEW, OR NOTE WHICH HAS BEEN MODIFIED WITH THE CURRENT DRAWING REVISION. THE CURRENT REVISION WILL BE SHOWN IN THE SYMBOL.

spec ref ---			dr	Stu Stoner	2008/02/05	projection	MM
tolerance std --- ---	TOLERANCES UNLESS OTHERWISE SPECIFIED		eng	Tom Feng	2014/09/24		
			chr	-	-		
			appr	Delhly Liu	2014/09/24	product family	MiniSAS/SATA
surface -	linear	0.X	±0.3	FCI	title	FINAL CABLE ASSEMBLY-ALTERNATE CABLE Mini SAS 2.0/SATA (CRKT)	dwg no 10084749
		0.XX	±0.10				
		0.XXX	±0.050				
---	angular	0°	±2°°	www.fci.com	cat. no. -	Product - Customer Drw	sheet 6 of 6

size	A3
scale	1:1
ecn no	ELX-N-18883-1
rel level	Released
rev	H

Copyright FCI.

Компания «ЭлектроПласт» предлагает заключение долгосрочных отношений при поставках импортных электронных компонентов на взаимовыгодных условиях!

Наши преимущества:

- Оперативные поставки широкого спектра электронных компонентов отечественного и импортного производства напрямую от производителей и с крупнейших мировых складов;
- Поставка более 17-ти миллионов наименований электронных компонентов;
- Поставка сложных, дефицитных, либо снятых с производства позиций;
- Оперативные сроки поставки под заказ (от 5 рабочих дней);
- Экспресс доставка в любую точку России;
- Техническая поддержка проекта, помощь в подборе аналогов, поставка прототипов;
- Система менеджмента качества сертифицирована по Международному стандарту ISO 9001;
- Лицензия ФСБ на осуществление работ с использованием сведений, составляющих государственную тайну;
- Поставка специализированных компонентов (Xilinx, Altera, Analog Devices, Intersil, Interpoint, Microsemi, Aeroflex, Peregrine, Syfer, Eurofarad, Texas Instrument, Miteq, Cobham, E2V, MA-COM, Hittite, Mini-Circuits,General Dynamics и др.);

Помимо этого, одним из направлений компании «ЭлектроПласт» является направление «Источники питания». Мы предлагаем Вам помощь Конструкторского отдела:

- Подбор оптимального решения, техническое обоснование при выборе компонента;
- Подбор аналогов;
- Консультации по применению компонента;
- Поставка образцов и прототипов;
- Техническая поддержка проекта;
- Защита от снятия компонента с производства.

Как с нами связаться

Телефон: 8 (812) 309 58 32 (многоканальный)
Факс: 8 (812) 320-02-42
Электронная почта: org@eplast1.ru
Адрес: 198099, г. Санкт-Петербург, ул. Калинина, дом 2, корпус 4, литера А.