NOTES:
1. ANY HOUSING MAY BE ASSEMBLED WITH RIGID PINS OR FLEXIBLE INSULATED OR UNINSULATED WIRES.
2. SEE SHEET 2 FOR HOUSING OPTIONS.
3. GROUND PIN IS 0.20mm LONGER THAN OTHER PINS.
4. EPOXY IS OPTIONAL FOR ASSEMBLIES WITH FLEXIBLE WIRES.
5. NO DAMAGE OR GOUGING ALLOWED ON PINS AFTER INSERTION INTO HOUSING. MAX. FLATNESS ON TOP OF PIN IS Ø 0.21mm

5-PIN CONFIGURATION (SHOWN WITH FLEXIBLE UNINSULATED LEADS)

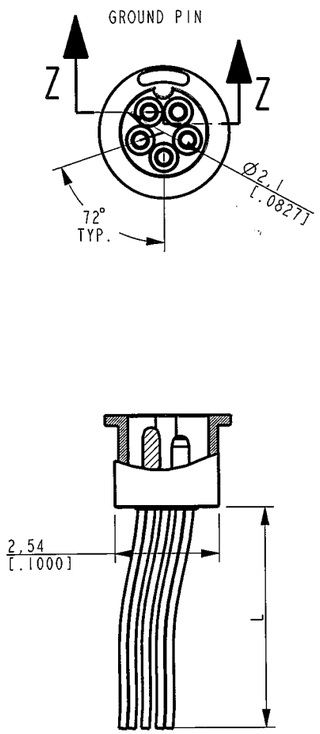

SECTION Z-Z

4-PIN CONFIGURATION (SHOWN WITH FLEXIBLE INSULATED LEADS)

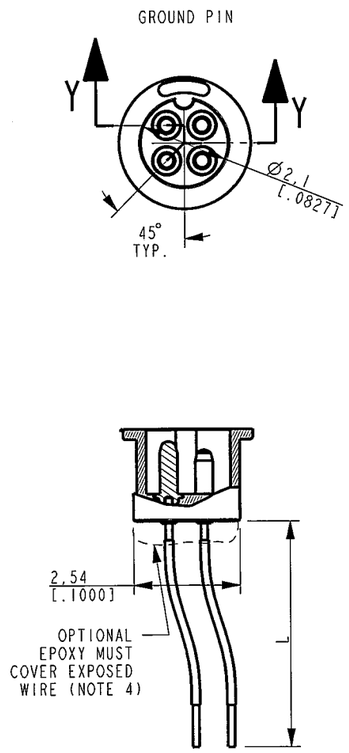

SECTION Y-Y

3-PIN CONFIGURATION (SHOWN WITH RIGID LEADS)

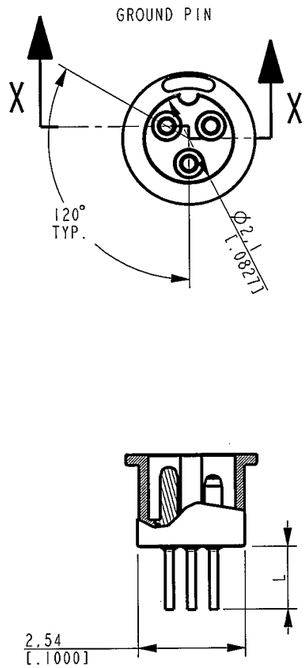

SECTION X-X

	MECHANICAL DATA		
	1.1	INSERTION FORCE (SOCKET/PLUG):	
	1.1.1	SOCKET (3 TERMINALS)	>2.5 N (0.6 lb.)
	1.1.2	SOCKET (4 TERMINALS)	>3.0 N (0.7 lb.)
	1.1.3	SOCKET (5 TERMINALS)	>4.0 N (0.9 lb.)
	1.2	EXTRACTION FORCE (SOCKET/PLUG):	
	1.2.1	SOCKET (3 TERMINALS)	<5.5 N (1.2 lb.)
	1.2.2	SOCKET (4 TERMINALS)	<8.0 N (1.8 lb.)
	1.2.3	SOCKET (5 TERMINALS)	<8.0 N (1.8 lb.)
	ELECTRICAL DATA		
	2.1	CONTACT RESISTANCE	<150 mΩ
	2.2	CONTACT RESISTANCE STABILITY (PULLING WITH 100g IN ALL DIRECTIONS)	<150 mΩ
	2.3	INSULATION RESISTANCE	>1 MΩ
	2.4	CURRENT (CONTINUOUS)	=500 mA MAX.
	ENVIRONMENTAL DATA		
C	3.1	SOLDERING TEMPERATURE/TIME	400°C (750°F) FOR 1 SECOND
C	3.2	SOLDERING DISTANCE FROM HOUSING	0.5mm (0.02in.) NO MECHANICAL STRESS TO BE APPLIED TO COMPONENT DURING SOLDERING
	3.3	BENDING OF TERMINALS:	
	3.3.1	RIGID TERMINALS	>2 TIMES 45°
	3.3.2	FLEXIBLE TERMINALS	>5 TIMES 90°
	3.4	PULL STRENGTH OF PINS (INITIAL)	>7N
	3.5	PULL STRENGTH OF FLEXIBLE LEADS	>2N
	3.6	RECOMMENDED GLUE	CYANOACRYLATE (NON-BLOOMING).
	3.7	RECOMMENDED CLEANING	AQUA WASH (ALPHA 2110) BENZINE AMMONIA, 10% SOLUTION WITH DEMINERALIZED WATER, ULTRASONIC CLEANING MUST BE AVOIDED.
	MATERIAL DATA		
	4.1	HOUSING	THERMOPLASTIC
	4.2	CONTACT PIN	GOLD-PLATED
	4.3	FLEXIBLE LEADS (UNINSULATED)	SOLID SILVER
	4.4	FLEXIBLE LEADS (INSULATED)	SILVER-PLATED COPPER
C	4.5	ALL MATERIALS	COMPLIANCE WITH EU DIRECTIVE 2002/95/EC (RoHS)

LEAD TYPE	LENGTH L
RIGID	0,50, 0,80, 1,00, 1,50 mm
FLEXIBLE (INSULATED)	5,10,15,20,25,30,40 mm
FLEXIBLE (UNINSULATED)	5, 10, 15, 20 mm

RED CONTROLLED

REV.	CHANGE #	DATE	NAME
C	C10104073	03/28/06	BCS
B	C10103278	10/18/05	BCS
A	C10101522	10/08/04	ALP

SCALE: 10:1

FUNDAMENTAL TOLERANCE: ± 0,05 [0.0019]

ANGLE TOLERANCE: ± 2°

MISMATCH TOLERANCE: ± 0,05 [0.0019]

	DATE	NAME
DESIGNED	12/08/03	BCS
CHECKED	03/28/06	BCS
RELEASED	03/28/06	TJ

MATERIAL:

HEAT TREATMENT:

FINISH:

TITLE: CONNECTOR SOCKET SPECIFICATION

RELEASED LEVEL: RELEASED

REVISION: C

DRAWING NUMBER: 0009-400

SHEETS: 1 of 2

PROPRIETARY NOTE: THIS DOCUMENT CONTAINS INFORMATION WHICH IS THE PROPRIETARY PROPERTY OF KNOWLES ELECTRONICS, LLC. OR ITS AFFILIATED ENTITIES. IT IS ISSUED IN STRICT CONFIDENCE AND SHALL NOT BE REPRODUCED, COPIED, USED, OR DISCLOSED TO ANY THIRD PARTY PARTIALLY OR WHOLLY IN ANY MANNER WITHOUT PRIOR WRITTEN PERMISSION OF, AND MUST BE RETURNED UPON REQUEST BY, KNOWLES ELECTRONICS, LLC.

deltek

STYLE 00

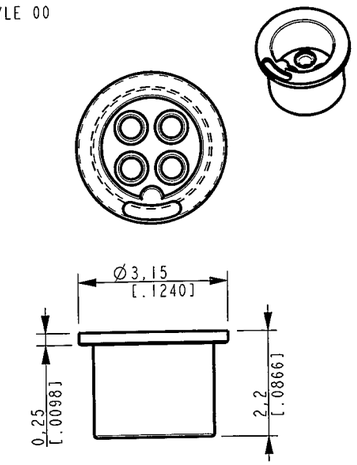

STYLE 01

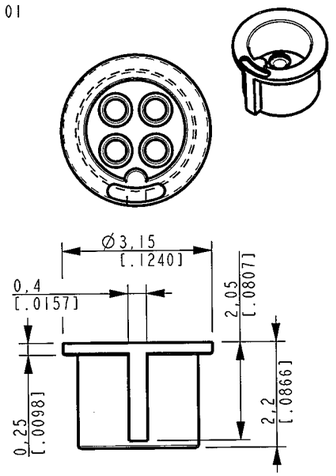

STYLE 02

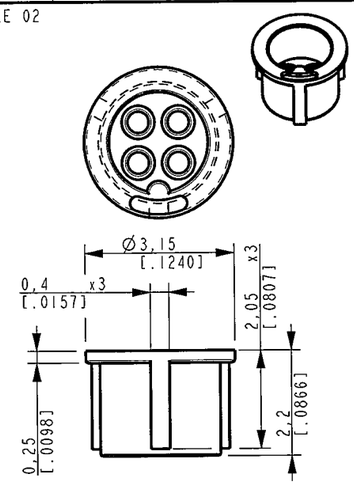

STYLE 03

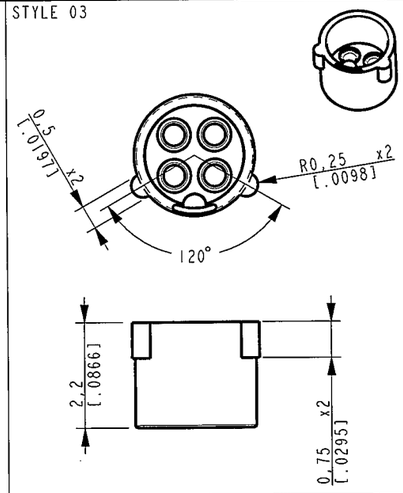

STYLE 04

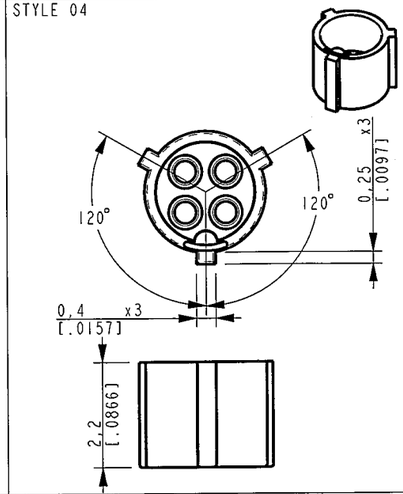

STYLE 05

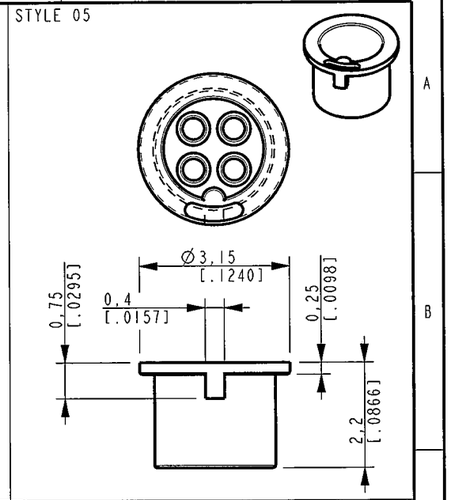

STYLE 06

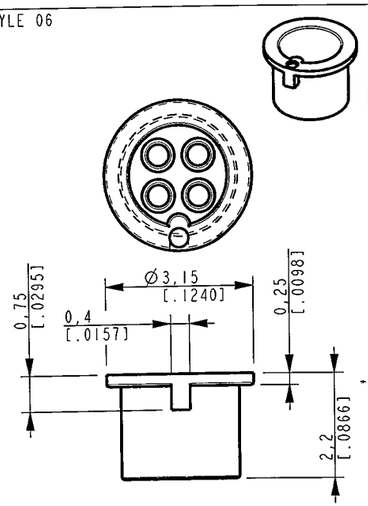

STYLE 07
ONLY AVAILABLE
IN 3 PIN & 4 PIN
CONFIGURATIONS.

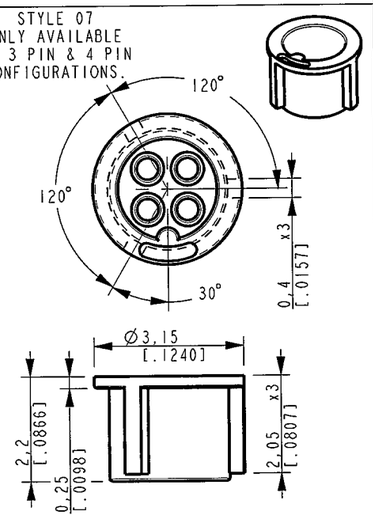

STYLE 08
ONLY AVAILABLE
IN 3 PIN & 4 PIN
CONFIGURATIONS.

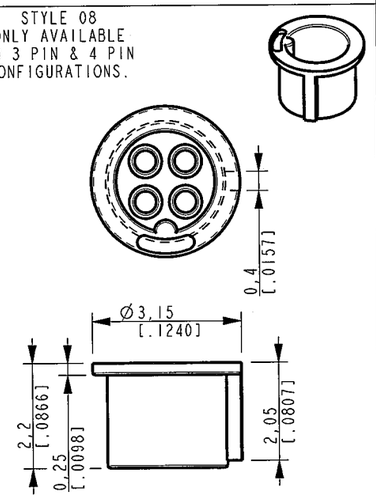

STYLE 09

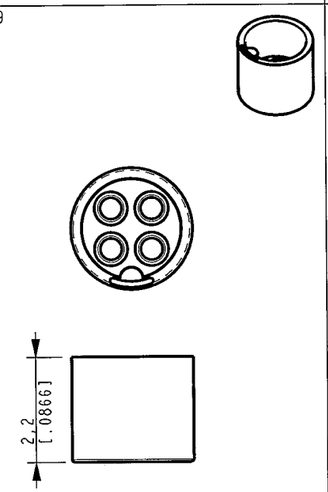

STYLE 10
TALLER OVERALL
HEIGHT REDUCES
NOMINAL LEAD
BY 0,10mm.

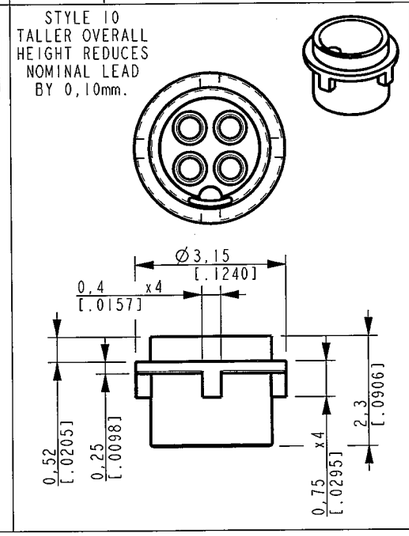

STYLE 11
TALLER OVERALL
HEIGHT REDUCES
NOMINAL LEAD
BY 0,10mm.
ONLY AVAILABLE
4 & 5 PIN
CONFIGURATIONS.

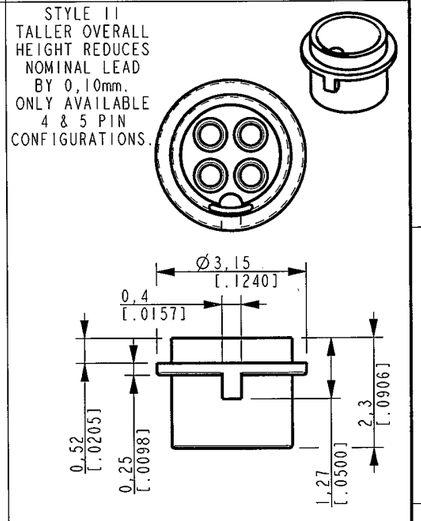

RED CONTROLLED

REV.	CHANGE #	DATE	NAME
C	C10104073	03/28/06	BCS
B	C10103278	10/20/05	BCS
A	C10101522	10/08/04	ALP

	DATE	NAME
DESIGNED	4/14/97	WO
CHECKED	03/28/06	BCS 3/29/06
RELEASED	03/28/06	TJ 32806

SCALE: 8:1

FUNDAMENTAL TOLERANCE: ± 0,05 [0.0019]

ANGLE TOLERANCE: ± 2°

MISMATCH TOLERANCE: ± 0,05 [0.0019]

MATERIAL:

HEAT TREATMENT:

FINISH:

TITLE: CONNECTOR SOCKET SPECIFICATION

RELEASED LEVEL: RELEASED

REVISION: C

DRAWING NUMBER: 0009-400

SHEETS: 2 of 2

PROPRIETARY NOTE: THIS DOCUMENT CONTAINS INFORMATION WHICH IS THE PROPRIETARY PROPERTY OF KNOWLES ELECTRONICS, LLC. OR ITS AFFILIATED ENTITIES. IT IS ISSUED IN STRICT CONFIDENCE AND SHALL NOT BE REPRODUCED, COPIED, USED, OR DISCLOSED TO ANY THIRD PARTY PARTIALLY OR WHOLLY IN ANY MANNER WITHOUT PRIOR WRITTEN PERMISSION OF, AND MUST BE RETURNED UPON REQUEST BY, KNOWLES ELECTRONICS, LLC.

deltek

Компания «ЭлектроПласт» предлагает заключение долгосрочных отношений при поставках импортных электронных компонентов на взаимовыгодных условиях!

Наши преимущества:

- Оперативные поставки широкого спектра электронных компонентов отечественного и импортного производства напрямую от производителей и с крупнейших мировых складов;
- Поставка более 17-ти миллионов наименований электронных компонентов;
- Поставка сложных, дефицитных, либо снятых с производства позиций;
- Оперативные сроки поставки под заказ (от 5 рабочих дней);
- Экспресс доставка в любую точку России;
- Техническая поддержка проекта, помощь в подборе аналогов, поставка прототипов;
- Система менеджмента качества сертифицирована по Международному стандарту ISO 9001;
- Лицензия ФСБ на осуществление работ с использованием сведений, составляющих государственную тайну;
- Поставка специализированных компонентов (Xilinx, Altera, Analog Devices, Intersil, Interpoint, Microsemi, Aeroflex, Peregrine, Syfer, Eurofarad, Texas Instrument, Miteq, Cobham, E2V, MA-COM, Hittite, Mini-Circuits,General Dynamics и др.);

Помимо этого, одним из направлений компании «ЭлектроПласт» является направление «Источники питания». Мы предлагаем Вам помощь Конструкторского отдела:

- Подбор оптимального решения, техническое обоснование при выборе компонента;
- Подбор аналогов;
- Консультации по применению компонента;
- Поставка образцов и прототипов;
- Техническая поддержка проекта;
- Защита от снятия компонента с производства.

Как с нами связаться

Телефон: 8 (812) 309 58 32 (многоканальный)
Факс: 8 (812) 320-02-42
Электронная почта: org@eplast1.ru
Адрес: 198099, г. Санкт-Петербург, ул. Калинина, дом 2, корпус 4, литера А.