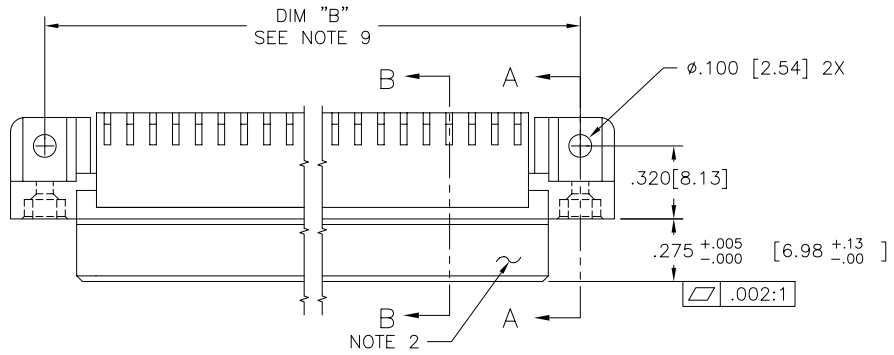
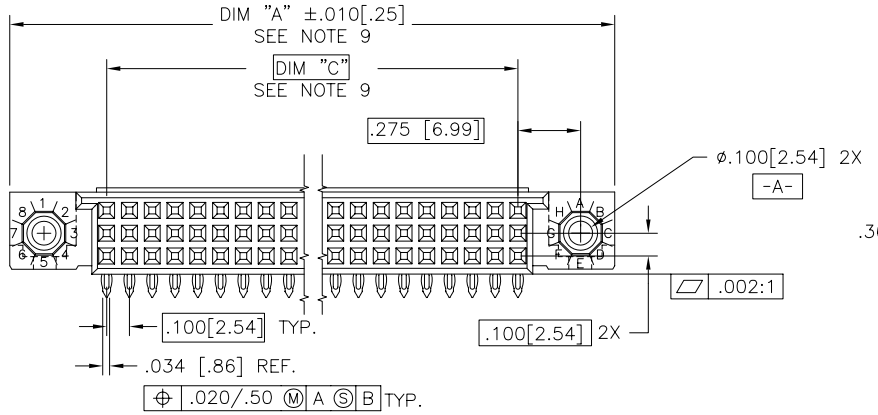
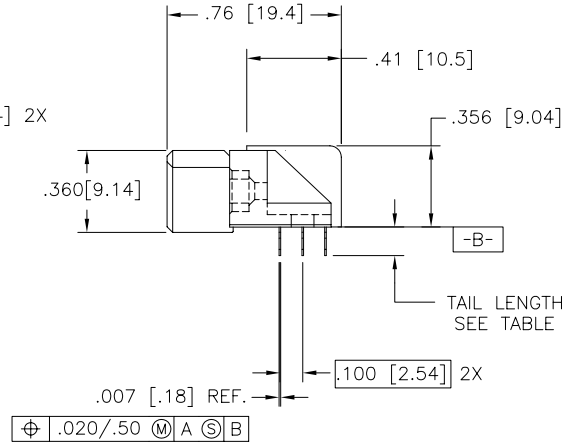
PRODUCT NUMBER
SEE TABLE







mat'l. code	surface	tolerance	projection	product family
SEE NOTE 4	ISO 1302	ISO 406 ISO 1101		HPC

ltr	ecn no	dr	date
K	V90001	HTB	2/15/99
L	V00268	JWS	1/31/00
M	V10826	JRW	2/7/01
N	V05-0511	DAI	8/15/05
P	V05-1054	HTB	11/17/05
R	M06-0255	MHT	7/06/06
S	M07-0099	AGS	2/08/07

tolerances unless otherwise specified
angles 0°±2°
linear .XX±.01/.3 .XXX±.005/.13 .XXXX±.0020/.051
INCH/MM
scale 1:1

dr	G.PETERS	6/19/93
engr	S.CLARK	6/19/93
chr	S.CLARK	6/19/93
appd	S.CLARK	6/19/93

title: 3 ROW R/A RECEPT. PRESS FIT, 0 GUIDE PIN

dwg no 50645 | sheet 1 of 4 | size A3

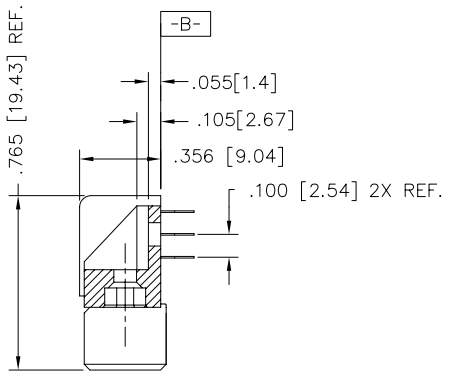
type Product Customer Drawing

sheet	revision	S	S	S	S
index	sheet	1	2	3	4

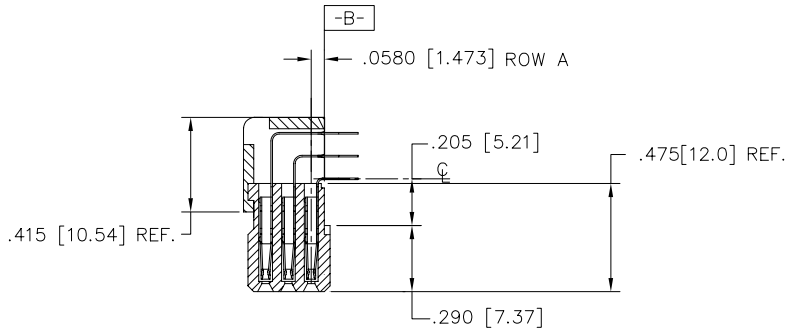
Copyright FCI
FCIconnect.com
form: A3

PDM: Rev:S STATUS: Released Printed: May 14, 2011

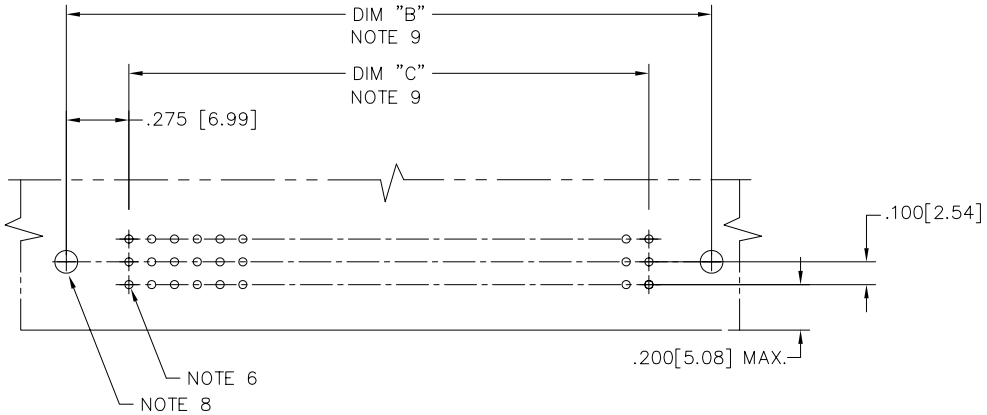
PRODUCT NUMBER
SEE TABLE



SECTION A–A



SECTION B–B



RECOMMENDED PCB LAYOUT
(ALL HOLES LOCATED ON .100 [2.54] GRID
UNLESS OTHERWISE SHOWN.)

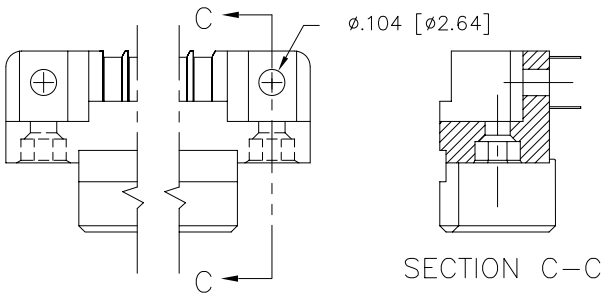
mat'l. code SEE NOTE 4				surface ISO 1302		tolerance ISO 406 ISO 1101		projection		product family HPC					
ltr	ecn no	dr	date	tolerances unless otherwise specified						title					
S				angles	linear	.XX±.01/.3		INCH/MM		3 ROW R/A RECEPT. PRESS FIT, 0 GUIDE PIN					
				0°±2°		.XXX±.005/.13									
						.XXXX±.0020/.051		scale 1:1							
				dr	G.PETERS	6/19/93				dwg no 50645				sheet 2 of 4	size A3
				engr	S.CLARK	6/19/93									
				chr	S.CLARK	6/19/93									
				appd	S.CLARK	6/19/93				type Product Customer Drawing					
sheet index	revision sheet														

FCIconnect.com
Copyright FCI

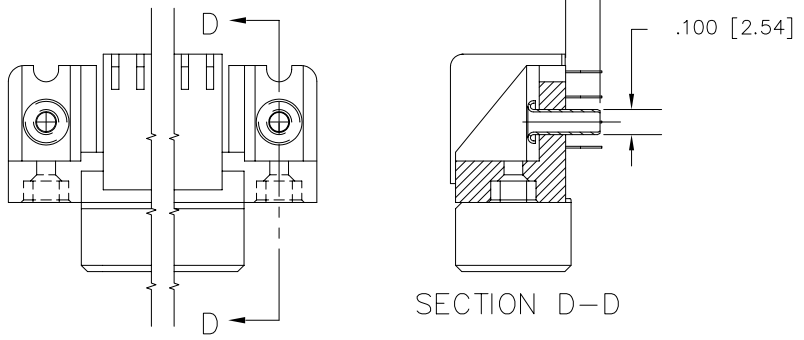
form: A3

PDM: Rev:S STATUS: Released Printed: May 14, 2011

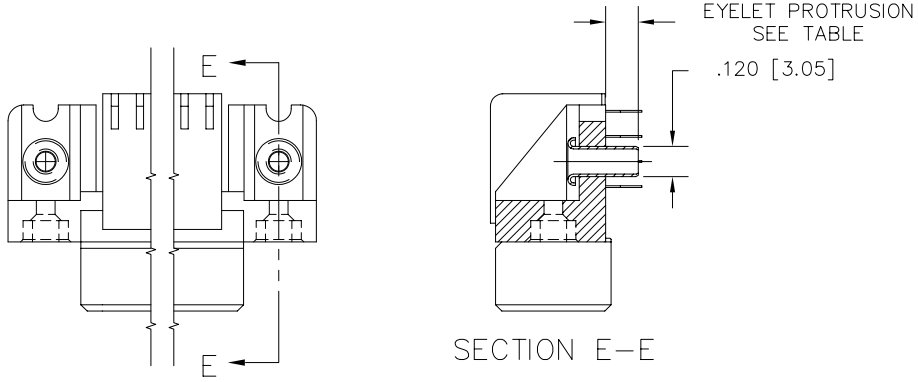
PRODUCT NUMBER
SEE TABLE



SPECIAL FEATURE OPTION A



SPECIAL FEATURE OPTION B



SPECIAL FEATURE OPTION C

mat'l. code: SEE NOTE 4				surface: ISO 1302		tolerance: ISO 406 ISO 1101		projection	product family: HPC		
ltr	ecn no	dr	date	tolerances unless otherwise specified					title: 3 ROW R/A RECEPT. PRESS FIT, 0 GUIDE PIN		
S				angles: 0°±2°	linear: .XX±.01/.3	.XXX±.005/.13	.XXXX±.0020/.051	INCH/MM scale 1:1			
				dr	G.PETERS	6/19/93			dwg no: 50645	sheet 3 of 4	size: A3
				engr	S.CLARK	6/19/93					
				chr	S.CLARK	6/19/93					
				appd	S.CLARK	6/19/93			type: Product Customer Drawing		
sheet index	revision sheet										

Copyright FCI
FCIconnect.com

form: A3

PDM: Rev:S STATUS: Released Printed: May 14, 2011

PRODUCT NUMBER NOTE 1	NUMBER OF POSITIONS NOTE 3	TAIL LENGTH ±.010/0.25	SPECIAL FEATURES SEE NOTE 8	SOLDER TAIL PLATING	CONTACT PLATING	EYELET PROTRUSION
50645-1YYYE	YYY	.125/3.18	NONE	TIN-LEAD	30u"/.76u Au	N/A
50645-1YYYELF	YYY	.125/3.18	NONE	TIN	30u"/.76u GXT	N/A
50645-1YYYEA	YYY	.125/3.18	"A"	TIN-LEAD	30u"/.76u Au	N/A
50645-1YYYEALF	YYY	.125/3.18	"A"	TIN	30u"/.76u GXT	N/A
50645-1YYYEB	YYY	.125/3.18	"B"	TIN-LEAD	30u"/.76u Au	.137/3.48
50645-1YYYEBLF	YYY	.125/3.18	"B"	TIN	30u"/.76u GXT	.137/3.48
50645-1YYYEC	YYY	.125/3.18	"C"	TIN-LEAD	30u"/.76u Au	.115/2.92
50645-1YYYECLF	YYY	.125/3.18	"C"	TIN	30u"/.76u GXT	.115/2.92
50645-1YYYF	YYY	.145/3.68	NONE	TIN-LEAD	30u"/.76u Au	N/A
50645-1YYYFLF	YYY	.145/3.68	NONE	TIN	30u"/.76u GXT	N/A
50645-1YYYFA	YYY	.145/3.68	"A"	TIN-LEAD	30u"/.76u Au	N/A
50645-1YYYFALF	YYY	.145/3.68	"A"	TIN	30u"/.76u GXT	N/A
50645-1YYYFC	YYY	.145/3.68	"C"	TIN-LEAD	30u"/.76u Au	.170/4.32
50645-1YYYFCLF	YYY	.145/3.68	"C"	TIN	30u"/.76u GXT	.170/4.32

NOTES:

1. PRODUCT NUMBERING CODE
   50645- X YYY Z S LF
   - LF — LEAD FREE (OPTIONAL)
   - S — SPECIAL FEATURES (NOTE 8)
   - Z — TAIL LENGTH (SEE TABLE)
   - YYY — NO. OF POSITIONS (SEE NOTE 3)
   - X — PLATING (SEE TABLE)
   - 50645- — BASE NUMBER

   PRODUCT NUMBERING CODE FOR SELECT LOAD
   50645- XX YYY LF
   - LF — LEAD FREE (OPTIONAL)
   - YYY — SEQUENCE NUMBER
   - XX — ALWAYS "XX"
   - 50645- — BASE NUMBER

2. MANUFACTURE'S LOGO, PART NUMBER, AND LOT CODE TO APPEAR ON THIS SURFACE.
3. THIS PRODUCT IS CONFIGURED IN SIZES OF 6 THRU 80 COLUMNS IN INCREMENTS OF ONE, i.e. 6, 7, 8, 9, ...79, 80.
4. MATERIAL: PRESS BLOCK – HIGH TEMP THERMOPLASTIC
   HOUSING: GLASS AND MINERAL FILLED HIGH TEMPERTURE THERMOPLASTIC, FLAME RETARDANT PER UL94V-O. COLOR-BLACK
   CONTACT: BeCu
5. PLATING:
   CONTACT AREA: 30µ"/0.76 µm Au OR 30µ"/0.76µm GXT (FOR LEAD-FREE OPTION)
   TAILS: EITHER TIN OR TIN LEAD, SEE TABLE.
6. DRILLED HOLE DIA OF .0453±.0010 [1.151±0.025] FINISHED TO .0400±.0030 [1.016±0.076] BY PLATING SnPb OR OTHER PLATING .0003 [0.008] TO .0006 [0.015] THICK WITH A COPPER UNDERPLATE AS NEEDED.
7. INFORMATION DOCUMENT: FOR PCB STAY-AWAY ZONE, SEE TA-0954.
8. SPECIAL FEATURES:
   _ = IF NO SPECIAL FEATURE CODE IS SELECTED, CONNECTOR WILL APPEAR AS SHOWN. PCB MOUNTING HOLE DIMENSION TO BE ø.120±.003 [3.05±0.07]
   "A" = IF SPECIFIED, CONNECTOR WILL APPEAR AS SHOWN ON SHEET 3. PCB MOUNTING HOLE DIMENSION TO BE ø.100±.003 [2.54±0.07].
   "B" = IF SPECIFIED, CONNECTOR WILL HAVE PRE-INSTALLED EYELET FOR P.C.B. ATTACHMENT IN A ø.100±.003 [2.54±0.07] MOUNTING HOLE. SEE SHEET 3. (AVAILABLE IN "E" TAIL LENGTH. ONLY).
   "C" = IF SPECIFIED, CONNECTOR WILL HAVE PRE-INSTALLED EYELET FOR P.C.B. ATTACHMENT IN A ø.120±.003 [3.05±0.07] MOUNTING HOLE. SEE SHEET 3.
9. DIMENSION "A" CALCULATION = .100 (2.54) X NO. OF COLUMNS +.75 (19.1)
   DIMENSION "B" CALCULATION = .100 (2.54) X NO. OF COLUMNS +.450 (11.43)
   DIMENSION "C" CALCULATION = .100 (2.54) X NO. OF COLUMNS -.100 (2.54)
10. ALL POSITIONS ARE LOADED EXCEPT FOR -XXYYY ASSEMBLIES WHICH HAVE SELECTIVE LOADING.
11. THIS PRODUCT (WITH "LF" SUFFIX) MEETS EUROPEAN UNION DIRECTIVES AND OTHER COUNTRY REGULATIONS AS DESCRIBED IN GS-22-008.
12. THIS HOUSING WILL WITHSTAND EXPOSURE TO 260°C PEAK TEMPERTURE FOR 10-30 SECONDS IN A CONVECTION, INFRA-RED OR VAPOR PHASE REFLOW OVEN.

mat'l. code: SEE NOTE 4	surface: ISO 1302	tolerance: ISO 406, ISO 1101	projection
ltr / ecn no / dr / date	tolerances unless otherwise specified		product family: HPC
S	angles: 0°±2°	linear: .XX±.01/.3, .XXX±.005/.13, .XXXX±.0020/.051	INCH/MM
			title: 3 ROW R/A RECEPT. PRESS FIT, 0 GUIDE PIN
			scale 1:1
	dr: G.PETERS 6/19/93		dwg no: 50645 sheet 4 of 4 size A3
	engr: S.CLARK 6/19/93		
	chr: S.CLARK 6/19/93		
	appd: S.CLARK 6/19/93		type: Product Customer Drawing
sheet index / revision sheet			

form: A3

FCIconnect.com
Copyright FCI

PDM: Rev:S STATUS: Released Printed: May 14, 2011

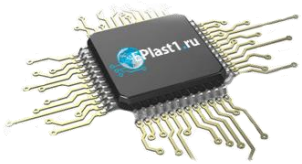
Компания «ЭлектроПласт» предлагает заключение долгосрочных отношений при поставках импортных электронных компонентов на взаимовыгодных условиях!

Наши преимущества:

- Оперативные поставки широкого спектра электронных компонентов отечественного и импортного производства напрямую от производителей и с крупнейших мировых складов;
- Поставка более 17-ти миллионов наименований электронных компонентов;
- Поставка сложных, дефицитных, либо снятых с производства позиций;
- Оперативные сроки поставки под заказ (от 5 рабочих дней);
- Экспресс доставка в любую точку России;
- Техническая поддержка проекта, помощь в подборе аналогов, поставка прототипов;
- Система менеджмента качества сертифицирована по Международному стандарту ISO 9001;
- Лицензия ФСБ на осуществление работ с использованием сведений, составляющих государственную тайну;
- Поставка специализированных компонентов (Xilinx, Altera, Analog Devices, Intersil, Interpoint, Microsemi, Aeroflex, Peregrine, Syfer, Eurofarad, Texas Instrument, Miteq, Cobham, E2V, MA-COM, Hittite, Mini-Circuits,General Dynamics и др.);

Помимо этого, одним из направлений компании «ЭлектроПласт» является направление «Источники питания». Мы предлагаем Вам помощь Конструкторского отдела:

- Подбор оптимального решения, техническое обоснование при выборе компонента;
- Подбор аналогов;
- Консультации по применению компонента;
- Поставка образцов и прототипов;
- Техническая поддержка проекта;
- Защита от снятия компонента с производства.



Как с нами связаться

Телефон: 8 (812) 309 58 32 (многоканальный)
Факс: 8 (812) 320-02-42
Электронная почта: org@eplast1.ru
Адрес: 198099, г. Санкт-Петербург, ул. Калинина, дом 2, корпус 4, литера А.