PRODUCT NUMBER
SEE TABLE

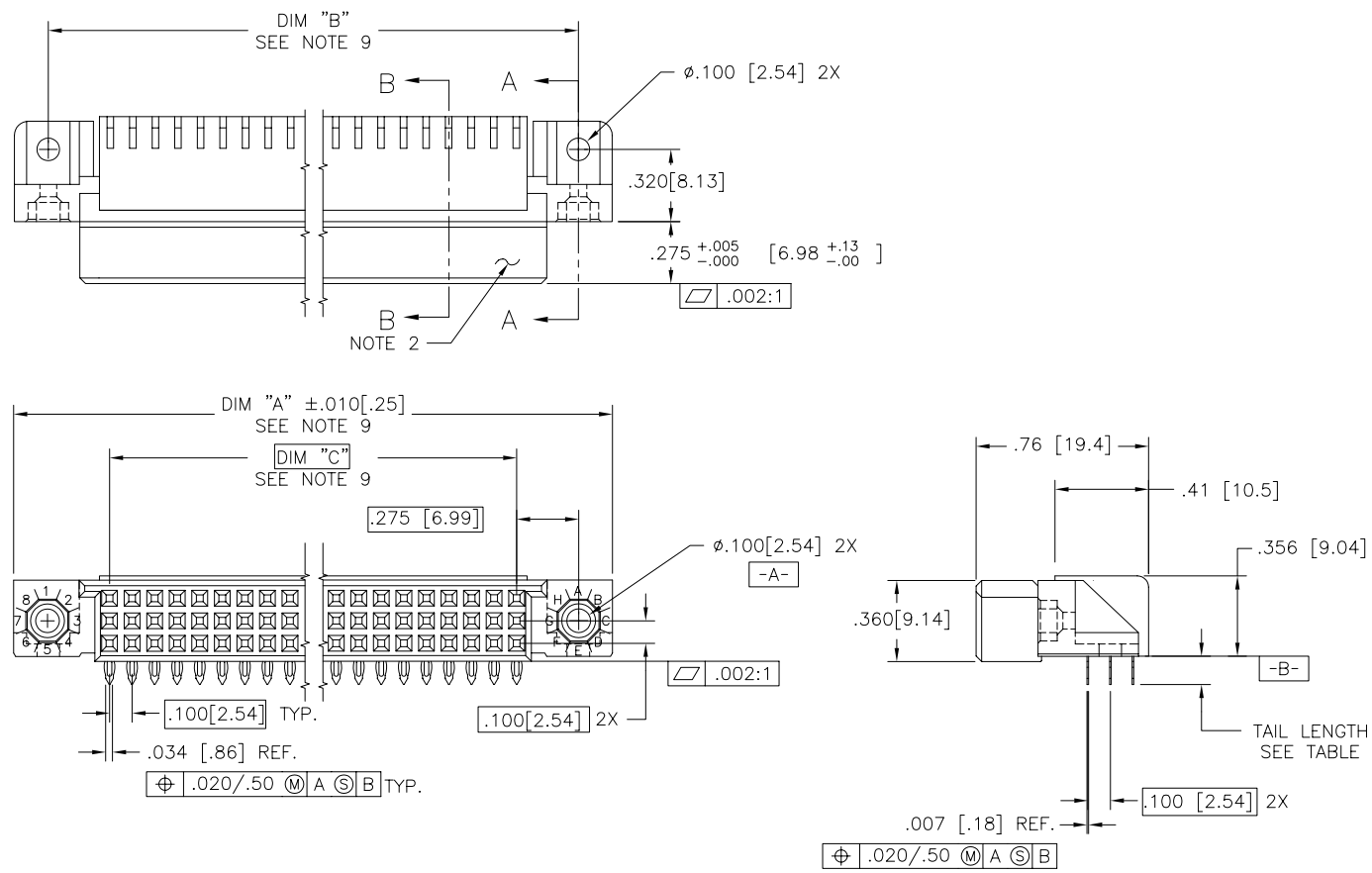

mat'l. code				surface	tolerance	projection	product family
SEE NOTE 4				ISO 1302	ISO 406 ISO 1101		HPC
ltr	ecn no	dr	date	tolerances unless otherwise specified			title
K	V90001	HTB	2/15/99	angles	linear .XX±.01/.3	INCH/MM	3 ROW R/A RECEPT.
L	V00268	JWS	1/31/00		.XXX±.005/.13		PRESS FIT, 0 GUIDE PIN
M	V10826	JRW	2/7/01	0°±2°	.XXXX±.0020/.051	scale 1:1	
N	V05-0511	DAI	8/15/05	dr	G.PETERS 6/19/93		dwg no 50645 sheet 1 of 4 size A3
P	V05-1054	HTB	11/17/05	engr	S.CLARK 6/19/93		
R	M06-0255	MHT	7/06/06	chr	S.CLARK 6/19/93		
S	M07-0099	AGS	2/08/07	appd	S.CLARK 6/19/93		type Product Customer Drawing

sheet index	revision	S	S	S	S
	sheet	1	2	3	4

FCIconnect.com
Copyright FCI

form: A3

PDM: Rev:S STATUS: Released Printed: May 14, 2011

PRODUCT NUMBER
SEE TABLE

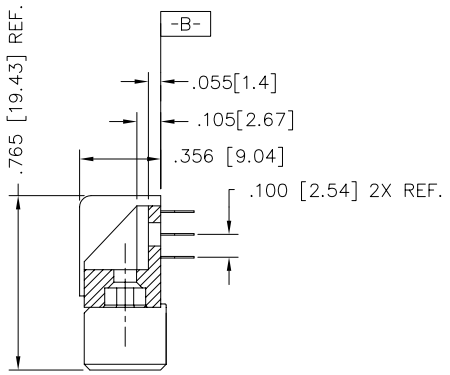

SECTION A–A

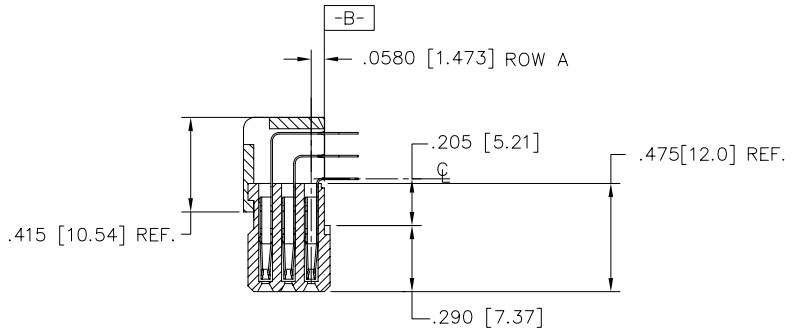

SECTION B–B

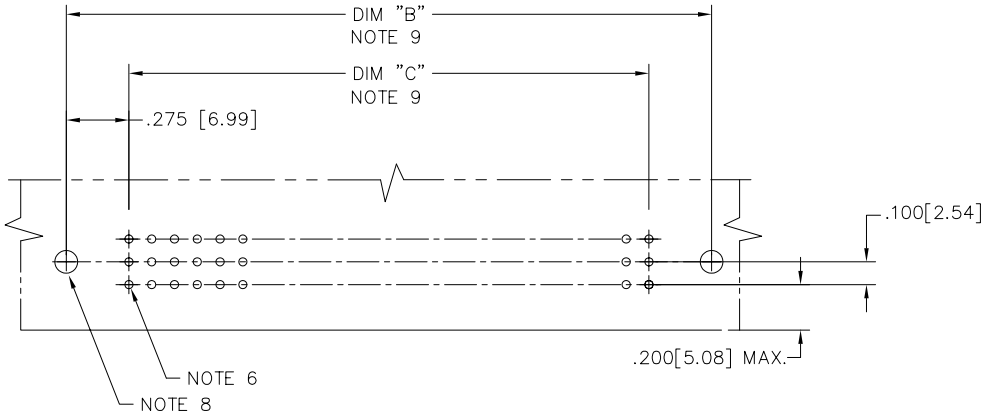

RECOMMENDED PCB LAYOUT
(ALL HOLES LOCATED ON .100 [2.54] GRID UNLESS OTHERWISE SHOWN.)

mat'l. code: SEE NOTE 4	surface: ISO 1302	tolerance: ISO 406 ISO 1101	projection
	tolerances unless otherwise specified		
angles: 0°±2°	linear: .XX±.01/.3; .XXX±.005/.13; .XXXX±.0020/.051	INCH/MM	scale 1:1
dr: G.PETERS 6/19/93	engr: S.CLARK 6/19/93	chr: S.CLARK 6/19/93	appd: S.CLARK 6/19/93
product family: HPC			
title: 3 ROW R/A RECEPT. PRESS FIT, 0 GUIDE PIN			
dwg no: 50645	sheet 2 of 4	size: A3	
type: Product Customer Drawing			

ltr	ecn no	dr	date
S			

sheet index | revision sheet

FCIconnect.com
Copyright FCI

form: A3

PDM: Rev:S STATUS: Released Printed: May 14, 2011

PRODUCT NUMBER
SEE TABLE

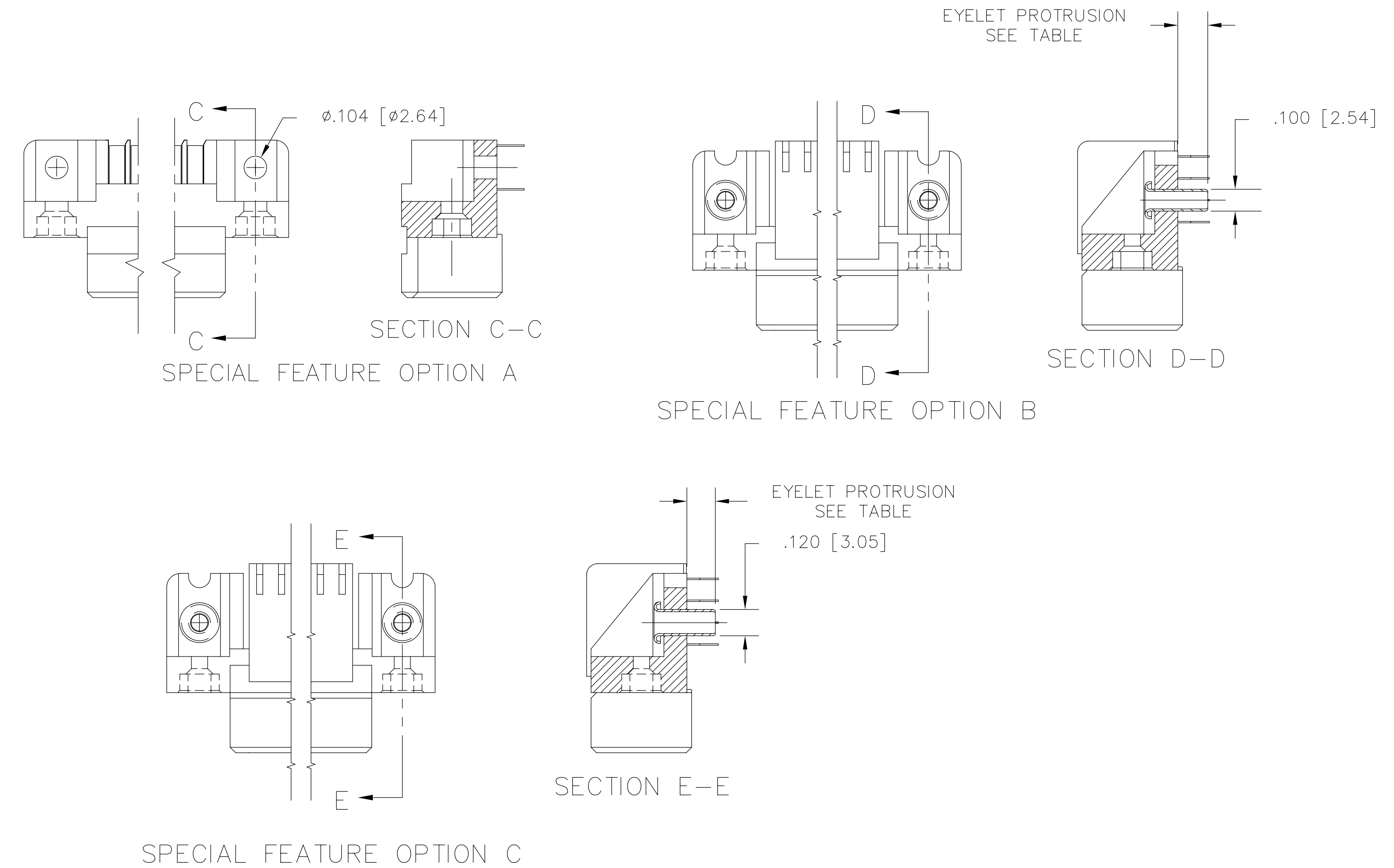

mat'l. code: SEE NOTE 4
surface: ISO 1302
tolerance: ISO 406, ISO 1101
projection
product family: HPC

tolerances unless otherwise specified
angles: 0°±2°
linear: .XX±.01/.3; .XXX±.005/.13; .XXXX±.0020/.051
INCH/MM
scale 1:1

ltr	ecn no	dr	date
S			

dr	G.PETERS	6/19/93
engr	S.CLARK	6/19/93
chr	S.CLARK	6/19/93
appd	S.CLARK	6/19/93

title: 3 ROW R/A RECEPT. PRESS FIT, 0 GUIDE PIN

dwg no: 50645
sheet 3 of 4
size: A3
type: Product Customer Drawing

sheet index | revision sheet

form: A3

FCIconnect.com
Copyright FCI

PRODUCT NUMBER NOTE 1	NUMBER OF POSITIONS NOTE 3	TAIL LENGTH ±.010/0.25	SPECIAL FEATURES SEE NOTE 8	SOLDER TAIL PLATING	CONTACT PLATING	EYELET PROTRUSION
50645-1YYYE	YYY	.125/3.18	NONE	TIN-LEAD	30u"/.76u Au	N/A
50645-1YYYELF	YYY	.125/3.18	NONE	TIN	30u"/.76u GXT	N/A
50645-1YYYEA	YYY	.125/3.18	"A"	TIN-LEAD	30u"/.76u Au	N/A
50645-1YYYEALF	YYY	.125/3.18	"A"	TIN	30u"/.76u GXT	N/A
50645-1YYYEB	YYY	.125/3.18	"B"	TIN-LEAD	30u"/.76u Au	.137/3.48
50645-1YYYEBLF	YYY	.125/3.18	"B"	TIN	30u"/.76u GXT	.137/3.48
50645-1YYYEC	YYY	.125/3.18	"C"	TIN-LEAD	30u"/.76u Au	.115/2.92
50645-1YYYECLF	YYY	.125/3.18	"C"	TIN	30u"/.76u GXT	.115/2.92
50645-1YYYF	YYY	.145/3.68	NONE	TIN-LEAD	30u"/.76u Au	N/A
50645-1YYYFLF	YYY	.145/3.68	NONE	TIN	30u"/.76u GXT	N/A
50645-1YYYFA	YYY	.145/3.68	"A"	TIN-LEAD	30u"/.76u Au	N/A
50645-1YYYFALF	YYY	.145/3.68	"A"	TIN	30u"/.76u GXT	N/A
50645-1YYYFC	YYY	.145/3.68	"C"	TIN-LEAD	30u"/.76u Au	.170/4.32
50645-1YYYFCLF	YYY	.145/3.68	"C"	TIN	30u"/.76u GXT	.170/4.32

NOTES:

1. PRODUCT NUMBERING CODE
   50645- X YYY Z S LF
   - LEAD FREE (OPTIONAL)
   - SPECIAL FEATURES (NOTE 8)
   - TAIL LENGTH (SEE TABLE)
   - NO. OF POSITIONS (SEE NOTE 3)
   - PLATING (SEE TABLE)
   - BASE NUMBER

   PRODUCT NUMBERING CODE FOR SELECT LOAD
   50645- XX YYY LF
   - LEAD FREE (OPTIONAL)
   - SEQUENCE NUMBER
   - ALWAYS "XX"
   - BASE NUMBER

2. MANUFACTURE'S LOGO, PART NUMBER, AND LOT CODE TO APPEAR ON THIS SURFACE.

3. THIS PRODUCT IS CONFIGURED IN SIZES OF 6 THRU 80 COLUMNS IN INCREMENTS OF ONE, i.e. 6, 7, 8, 9, ...79, 80.

4. MATERIAL: PRESS BLOCK – HIGH TEMP THERMOPLASTIC
   HOUSING: GLASS AND MINERAL FILLED HIGH TEMPERTURE THERMOPLASTIC, FLAME RETARDANT PER UL94V-O. COLOR-BLACK
   CONTACT: BeCu

5. PLATING:
   CONTACT AREA: 30μ"/0.76 μm Au OR 30μ"/0.76μm GXT (FOR LEAD-FREE OPTION)
   TAILS: EITHER TIN OR TIN LEAD, SEE TABLE.

6. DRILLED HOLE DIA OF .0453±.0010 [1.151±0.025] FINISHED TO .0400±.0030 [1.016±0.076] BY PLATING SnPb OR OTHER PLATING .0003 [0.008] TO .0006 [0.015] THICK WITH A COPPER UNDERPLATE AS NEEDED.

7. INFORMATION DOCUMENT: FOR PCB STAY-AWAY ZONE, SEE TA-0954.

8. SPECIAL FEATURES:
   _ = IF NO SPECIAL FEATURE CODE IS SELECTED, CONNECTOR WILL APPEAR AS SHOWN. PCB MOUNTING HOLE DIMENSION TO BE ø.120±.003 [3.05±0.07]
   "A" = IF SPECIFIED, CONNECTOR WILL APPEAR AS SHOWN ON SHEET 3. PCB MOUNTING HOLE DIMENSION TO BE ø.100±.003 [2.54±0.07].
   "B" = IF SPECIFIED, CONNECTOR WILL HAVE PRE-INSTALLED EYELET FOR P.C.B. ATTACHMENT IN A ø.100±.003 [2.54±0.07] MOUNTING HOLE. SEE SHEET 3. (AVAILABLE IN "E" TAIL LENGTH. ONLY).
   "C" = IF SPECIFIED, CONNECTOR WILL HAVE PRE-INSTALLED EYELET FOR P.C.B. ATTACHMENT IN A ø.120±.003 [3.05±0.07] MOUNTING HOLE. SEE SHEET 3.

9. DIMENSION "A" CALCULATION = .100 (2.54) X NO. OF COLUMNS +.75 (19.1)
   DIMENSION "B" CALCULATION = .100 (2.54) X NO. OF COLUMNS +.450 (11.43)
   DIMENSION "C" CALCULATION = .100 (2.54) X NO. OF COLUMNS –.100 (2.54)

10. ALL POSITIONS ARE LOADED EXCEPT FOR –XXYYY ASSEMBLIES WHICH HAVE SELECTIVE LOADING.

11. THIS PRODUCT (WITH "LF" SUFFIX) MEETS EUROPEAN UNION DIRECTIVES AND OTHER COUNTRY REGULATIONS AS DESCRIBED IN GS-22-008.

12. THIS HOUSING WILL WITHSTAND EXPOSURE TO 260°C PEAK TEMPERTURE FOR 10–30 SECONDS IN A CONVECTION, INFRA-RED OR VAPOR PHASE REFLOW OVEN.

mat'l. code: SEE NOTE 4
surface: ISO 1302
tolerance: ISO 406 ISO 1101
projection
product family: HPC
ltr | ecn no | dr | date
S
tolerances unless otherwise specified
angles: 0°±2°
linear: .XX±.01/.3 ; .XXX±.005/.13 ; .XXXX±.0020/.051
INCH/MM
scale 1:1
title: 3 ROW R/A RECEPT. PRESS FIT, 0 GUIDE PIN

dr	G.PETERS	6/19/93
engr	S.CLARK	6/19/93
chr	S.CLARK	6/19/93
appd	S.CLARK	6/19/93

dwg no: 50645 sheet 4 of 4 size A3
type: Product Customer Drawing
sheet index | revision sheet

FCIconnect.com
Copyright FCI
form: A3
PDM: Rev:S STATUS: Released Printed: May 14, 2011

Компания «ЭлектроПласт» предлагает заключение долгосрочных отношений при поставках импортных электронных компонентов на взаимовыгодных условиях!

Наши преимущества:

- Оперативные поставки широкого спектра электронных компонентов отечественного и импортного производства напрямую от производителей и с крупнейших мировых складов;
- Поставка более 17-ти миллионов наименований электронных компонентов;
- Поставка сложных, дефицитных, либо снятых с производства позиций;
- Оперативные сроки поставки под заказ (от 5 рабочих дней);
- Экспресс доставка в любую точку России;
- Техническая поддержка проекта, помощь в подборе аналогов, поставка прототипов;
- Система менеджмента качества сертифицирована по Международному стандарту ISO 9001;
- Лицензия ФСБ на осуществление работ с использованием сведений, составляющих государственную тайну;
- Поставка специализированных компонентов (Xilinx, Altera, Analog Devices, Intersil, Interpoint, Microsemi, Aeroflex, Peregrine, Syfer, Eurofarad, Texas Instrument, Miteq, Cobham, E2V, MA-COM, Hittite, Mini-Circuits,General Dynamics и др.);

Помимо этого, одним из направлений компании «ЭлектроПласт» является направление «Источники питания». Мы предлагаем Вам помощь Конструкторского отдела:

- Подбор оптимального решения, техническое обоснование при выборе компонента;
- Подбор аналогов;
- Консультации по применению компонента;
- Поставка образцов и прототипов;
- Техническая поддержка проекта;
- Защита от снятия компонента с производства.

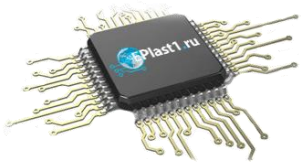

Как с нами связаться

Телефон: 8 (812) 309 58 32 (многоканальный)
Факс: 8 (812) 320-02-42
Электронная почта: org@eplast1.ru
Адрес: 198099, г. Санкт-Петербург, ул. Калинина, дом 2, корпус 4, литера А.