TFA32 Series

Automotive Grade Tuning Fork Crystal

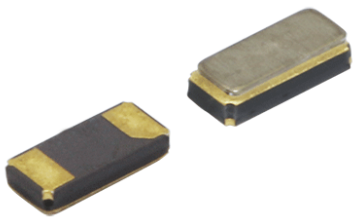

Part Dimensions:
3.2 × 1.5 × 0.9mm • 12.1467mg

Features

- AEC-Q200 Compliant
- Hermetic Ceramic Surface Mount Package
- Tuning Fork Crystal Design
- 32.7680kHz Frequency Reference
- Frequency Tolerance, ±20ppm Standard
- Parabolic Temperature Coefficient
- Tape and Reel Packaging, EIA-418

Applications

- Automotive Electronics
- Car Navigation Systems
- Car Infotainment Systems
- Industrial Control Equipment
- M2M Communications
- FPGAs & Microcontrollers

Description

CTS TFA32 Series is ideal for supporting wide range of electronic designs requiring a Real Time Clock reference. This series will support general automotive and industrial applications.

Ordering Information

Model	Frequency Tolerance	Load Capacitance	Temperature Range	Frequency Code [kHz]	Packaging
TF A32	2	P	I	327K	R

Code	Package
A	Automotive
32	3.2x1.5mm

Code	Capacitance
P	12.5pF
J	9pF
V	7pF
T	6pF

Code	Frequency
	Frequency = 32.7680kHz

Code	@ +25°C
2	±20ppm
1	±10ppm

Code	Temp. Range
I	-40°C to +85°C
G	-40°C to +105°C
H	-40°C to +125°C [1]

Code	Packing
R	3k pcs./reel

Notes:
1] Check with factory for availability.

Not all performance combinations and frequencies may be available.
Contact your local CTS Representative or CTS Customer Service for availability.

This product is specified for use only in standard commercial applications. Supplier disclaims all express and implied warranties and liability in connection with any use of this product in any non-commercial applications or in any application that may expose the product to conditions that are outside of the tolerances provided in its specification.

©2017 CTS® Corporation. Information/product(s) subject to change. No warranty that product(s) will meet the stated specifications for customer specific applications or test equipment. Visit www.ctscorp.com for list of applicable patent(s), more information, or to request a quote.

Electrical Specifications

Operating Conditions

PARAMETER	SYMBOL	CONDITIONS	MIN	TYP	MAX	UNIT
Operating Temperature	T_A	-	-40 -40 -40	+25	+85 +105 +125	°C
Turnover Temperature	T_M	-	+20	+25	+30	°C
Storage Temperature	T_{STG}	-	-55	-	+125	°C

Frequency Stability

PARAMETER	SYMBOL	CONDITIONS	MIN	TYP	MAX	UNIT
Frequency	f_O	-		32.7680		kHz
Frequency Tolerance [Note 1]	$\Delta f/f_O$	Standard @ +25°C	-20	-	20	ppm
Parabolic Coefficient	ß	See Figure 1		-0.034 ±0.010		ppm/°C^2
Aging	$\Delta f/f_0$	First Year @ +25°C	-3	-	3	ppm

Crystal Parameters

PARAMETER	SYMBOL	CONDITIONS	MIN	TYP	MAX	UNIT
Operating Mode	-	-		Flexural Mode [Tuning Fork]		-
Load Capacitance [Note 1]	C_L	Standard	-	12.5	-	pF
Shunt Capacitance	C_0	-	-	1.2	-	pF
Motional Capacitance	C_1	-	-	3.4	-	fF
Series Resistance	R_1	-	-	-	70	kΩ
Drive Level	DL	-	-	0.5	1.0	µW
Insulation Resistance	R_i	+100Vdc ±15Vdc	500	-	-	MΩ

1.] See Ordering Information for available options.

Figure 1

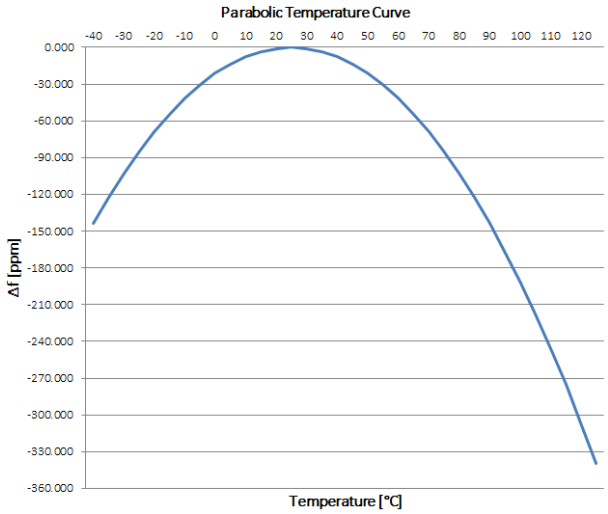

Frequency Stability [Δf] at a given temperature,

$$\Delta f = ß[T_A - T_M]^2$$

ß = Parabolic Coefficient
T_A = Ambient Temperature
T_M = Turnover Temperature

Ex. Find frequency stability at T_A = +60°C

$\Delta f = -0.034[60-25]^2$
$\Delta f = -0.034[35]^2$
$\Delta f = -41.65$ppm

©2017 CTS® Corporation. Information/product(s) subject to change. No warranty that product(s) will meet the stated specifications for customer specific applications or test equipment. Visit www.ctscorp.com for list of applicable patent(s), more information, or to request a quote.

Mechanical Specifications

Package Drawing

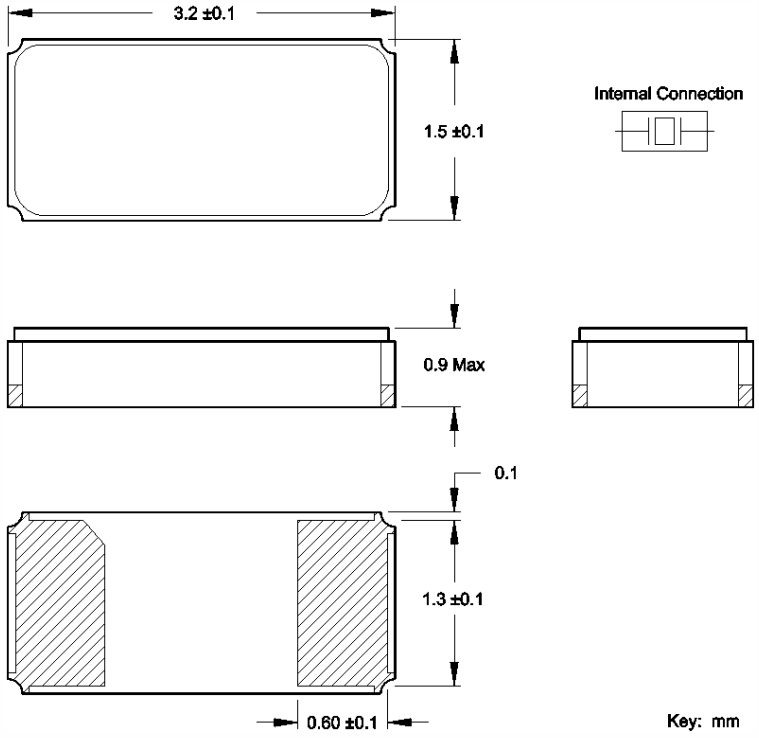

Marking Information

Refer to document 016-0071-0, TF Marking Guide, for marking formats by product family.

Recommended Pad Layout

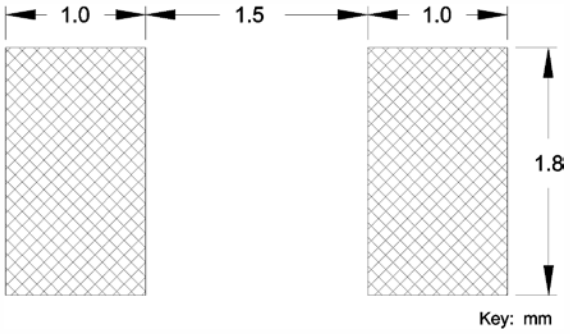

Notes

1. JEDEC termination code (e4). Barrier-plating is nickel [Ni] with gold [Au] flash plate.
2. Reflow conditions per JEDEC J-STD-020; +260°C maximum, 20 seconds.
3. MSL = 1.

©2017 CTS® Corporation. Information/product(s) subject to change. No warranty that product(s) will meet the stated specifications for customer specific applications or test equipment. Visit www.ctscorp.com for list of applicable patent(s), more information, or to request a quote.

Packaging - Tape and Reel

Tape Drawing

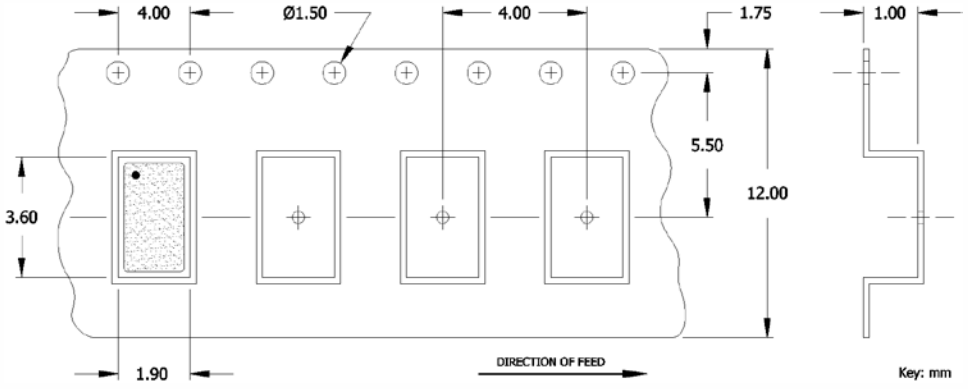

Reel Drawing

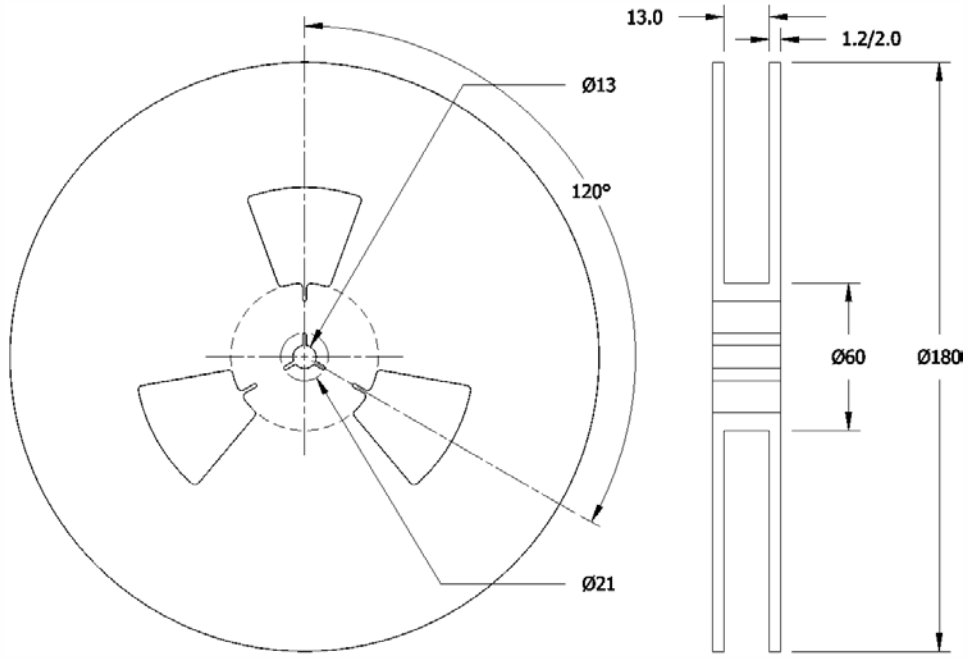

Notes

1. Device quantity is 3k pieces maximum per 180mm reel.
2. Complete CTS part number, frequency value, date code and manufacturing site code information must appear on reel and carton labels.

©2017 CTS® Corporation. Information/product(s) subject to change. No warranty that product(s) will meet the stated specifications for customer specific applications or test equipment. Visit www.ctscorp.com for list of applicable patent(s), more information, or to request a quote.

Компания «ЭлектроПласт» предлагает заключение долгосрочных отношений при поставках импортных электронных компонентов на взаимовыгодных условиях!

Наши преимущества:

- Оперативные поставки широкого спектра электронных компонентов отечественного и импортного производства напрямую от производителей и с крупнейших мировых складов;
- Поставка более 17-ти миллионов наименований электронных компонентов;
- Поставка сложных, дефицитных, либо снятых с производства позиций;
- Оперативные сроки поставки под заказ (от 5 рабочих дней);
- Экспресс доставка в любую точку России;
- Техническая поддержка проекта, помощь в подборе аналогов, поставка прототипов;
- Система менеджмента качества сертифицирована по Международному стандарту ISO 9001;
- Лицензия ФСБ на осуществление работ с использованием сведений, составляющих государственную тайну;
- Поставка специализированных компонентов (Xilinx, Altera, Analog Devices, Intersil, Interpoint, Microsemi, Aeroflex, Peregrine, Syfer, Eurofarad, Texas Instrument, Miteq, Cobham, E2V, MA-COM, Hittite, Mini-Circuits,General Dynamics и др.);

Помимо этого, одним из направлений компании «ЭлектроПласт» является направление «Источники питания». Мы предлагаем Вам помощь Конструкторского отдела:

- Подбор оптимального решения, техническое обоснование при выборе компонента;
- Подбор аналогов;
- Консультации по применению компонента;
- Поставка образцов и прототипов;
- Техническая поддержка проекта;
- Защита от снятия компонента с производства.

Как с нами связаться

Телефон: 8 (812) 309 58 32 (многоканальный)
Факс: 8 (812) 320-02-42
Электронная почта: org@eplast1.ru
Адрес: 198099, г. Санкт-Петербург, ул. Калинина, дом 2, корпус 4, литера А.