JST

Crimp

2.5mm
(.098") pitch

EH CONNECTOR

Radial Tape

Disconnectable Crimp style connectors

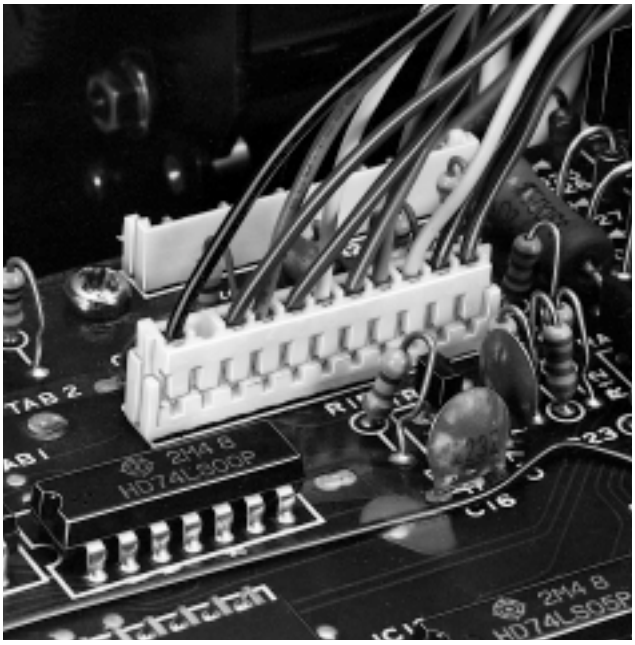

This, the thinnest, 2.5mm (.098") pitch connector, is 8.1mm (.319") in height after mounting and 3.8mm (.150") in width. It is designed to meet the demand for the high-density connection of internal wires to printed circuit boards. It is compact, highly reliable and low in cost.

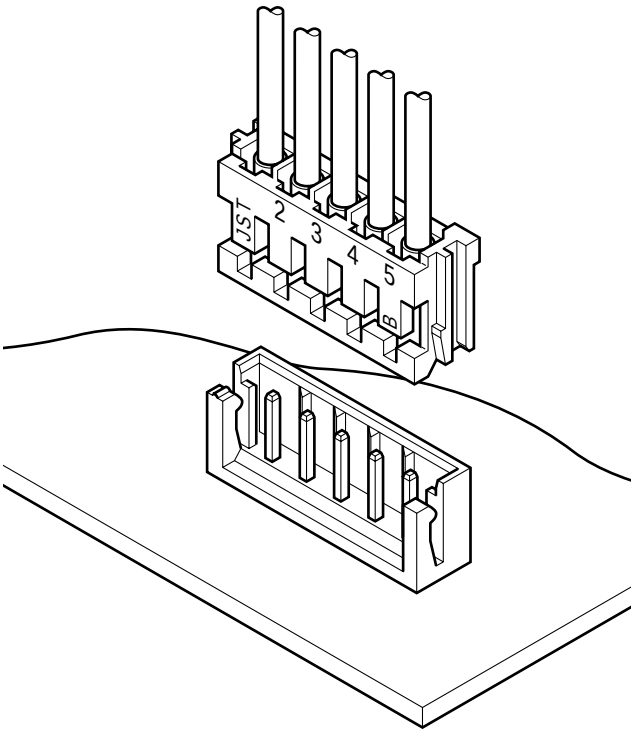

Features

• Compact and slim

This connector is designed to be compact and unusually thin. It measures only 8.1mm (.319") high after mounting and is just 3.8mm (.150") wide.

• Highly reliable contact

The contact has long dimples near the center that ensure continuity of low voltage and low current circuits at all times, even under conditions of vibration and abusive prying.

• Polarizing guides

The header and housing have guides to prevent improper mating.

• Whisker prevention

The contact material is treated with a reflow process, and the square post is copper-undercoated and tin/lead-plated for whisker prevention.

• Easy and effective crimping

Although the contact is compact, it has a long wire strip length, 2.6±0.4mm (.102"±.016"). This long length is very useful for automatic crimping and when crimping shielded wires.

Specifications

- Current rating: 3A AC, DC (AWG#22)
- Voltage rating: 250V AC, DC
- Temperature range: -25˚C to +85˚C (including temperature rise in applying electrical current)
- Contact resistance: Initial value/10m Ω max. After environmental testing/20m Ω max.
- Insulation resistance: 1,000M Ω min.
- Withstanding voltage: 800V AC/minute
- Applicable wire: AWG #32 to #22
- Applicable PC board thickness: 0.8 to 1.6mm(.031" to .063")

* Contact JST for details.

Standards

Recognized E60389

Certified LR20812

R75089

Contact

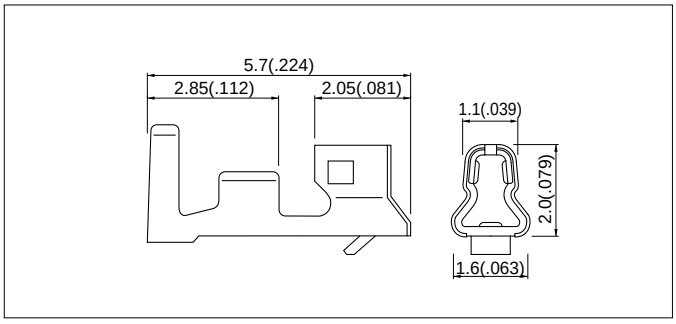

Model No.	Applicable wire			Q'ty / reel
	mm²	AWG #	Insulation O.D. mm(in.)	
SEH-001T-P0.6	0.05 to 0.3	30 to 22	1.0 to 1.9(.039 to .075)	10,000
SEH-003T-P0.6L	0.032 to 0.08	32 to 28	0.5 to 1.1(.020 to .043)	

Material and Finish
Phosphor bronze, tin-plated

Note: 1. Contact JST for gold-plated contacts.
2. SEH-003T-P0.6L is not TÜV approved.

Housing

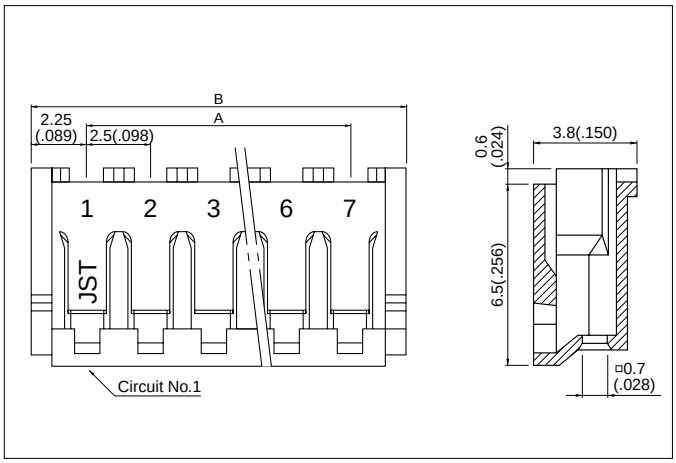

Cir-cuits	Model No.	Dimensions mm(in.)		Q'ty / bag
		A	B	
2	**EHR- 2**	2.5(.098)	7.0(.276)	1,000
3	**EHR- 3**	5.0(.197)	9.5(.374)	1,000
4	**EHR- 4**	7.5(.295)	12.0(.472)	1,000
5	**EHR- 5**	10.0(.394)	14.5(.571)	1,000
6	**EHR- 6**	12.5(.492)	17.0(.669)	1,000
7	**EHR- 7**	15.0(.591)	19.5(.768)	1,000
8	**EHR- 8**	17.5(.689)	22.0(.866)	1,000
9	**EHR- 9**	20.0(.787)	24.5(.965)	1,000
10	**EHR-10**	22.5(.866)	27.0(1.063)	1,000
11	**EHR-11**	25.0(.984)	29.5(1.161)	1,000
12	**EHR-12**	27.5(1.083)	32.0(1.260)	1,000
13	**EHR-13**	30.0(1.181)	34.5(1.358)	1,000
14	**EHR-14**	32.5(1.280)	37.0(1.457)	1,000
15	**EHR-15**	35.0(1.378)	39.5(1.555)	1,000

Material
Nylon 66, UL94V-0, natural (white)

<For reference> As the color identification,
the following alphabet shall be put in the underlined part.
For availability, delivery and minimum order quantity, contact JST.

ex. EHR-2-oo
(blank)…natural (white)
K…black R…red TR…tomato red E…blue Y…yellow
L…lemon yellow M…green O…orange N…brown PL…purple
PK…pink H…gray LE…light blue FY…vivid yellow

Shrouded header

The shrouded headers are interchangeable with those of the HR crimp style and insulation displacement connectors.

Top entry type

(2 circuits)

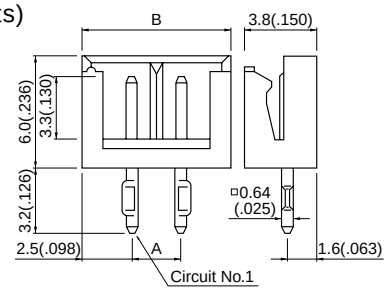

(3 to 15 circuits)

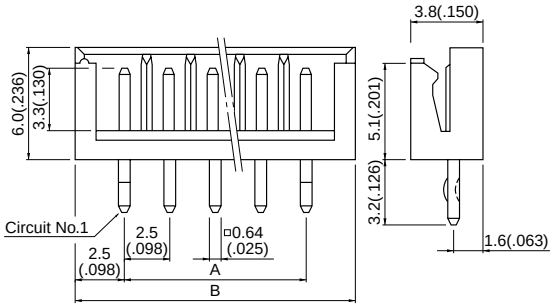

Side entry type

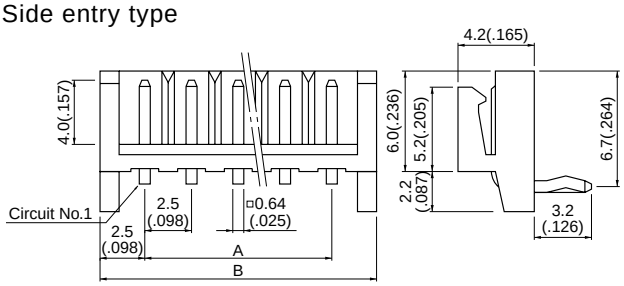

Circuits	Model No.		Dimensions mm.(in)		Q'ty / box	
	Top entry type	Side entry type	A	B	Top entry type	Side entry type
2	**B 2B-EH-A**	**S 2B-EH**	2.5(.098)	7.5(.295)	1,000	1,000
3	**B 3B-EH-A**	**S 3B-EH**	5.0(.197)	10.0(.394)	1,000	1,000
4	**B 4B-EH-A**	**S 4B-EH**	7.5(.295)	12.5(.492)	1,000	1,000
5	**B 5B-EH-A**	**S 5B-EH**	10.0(.394)	15.0(.591)	1,000	1,000
6	**B 6B-EH-A**	**S 6B-EH**	12.5(.492)	17.5(.689)	1,000	500
7	**B 7B-EH-A**	**S 7B-EH**	15.0(.591)	20.0(.787)	1,000	500
8	**B 8B-EH-A**	**S 8B-EH**	17.5(.689)	22.5(.886)	500	500
9	**B 9B-EH-A**	**S 9B-EH**	20.0(.787)	25.0(.984)	500	500
10	**B10B-EH-A**	**S10B-EH**	22.5(.866)	27.5(1.083)	500	500
11	**B11B-EH-A**	**S11B-EH**	25.0(.984)	30.0(1.181)	500	250
12	**B12B-EH-A**	**S12B-EH**	27.5(1.083)	32.5(1.280)	500	250
13	**B13B-EH-A**	**S13B-EH**	30.0(1.181)	35.0(1.378)	250	250
14	**B14B-EH-A**	**S14B-EH**	32.5(1.280)	37.5(1.476)	250	250
15	**B15B-EH-A**	**S15B-EH**	35.0(1.378)	40.0(1.575)	250	250

Material and Finish
Post: Brass, copper-undercoated, tin/lead plated Wafer: Nylon 66, UL94V-0, natural (white)

Note:
1. Also available and identified as model BxxB-EH is a top entry type having a post extension length of 4.0mm(.157")
2. Top entry type headers are not TÜV approved.

<For reference> As the color identification, the following alphabet shall be put in the underlined part. For availability, delivery and minimum order quantity, contact JST.

<Top entry type>

ex. B2B-EH-A-oo
(blank)…natural (white)
K…black R…red E…blue Y…yellow M…green

<Side entry type>

ex. S2B-EH-oo
(blank)…natural (white)
K…black R…red TR…tomato red E…blue Y…yellow
L…lemon yellow M…green O…orange N…brown P…purple
PK…pink H…gray LE…light blue FY…vivid yellow

PC board layout (viewed from soldering side) and Assembly layout

Top entry type

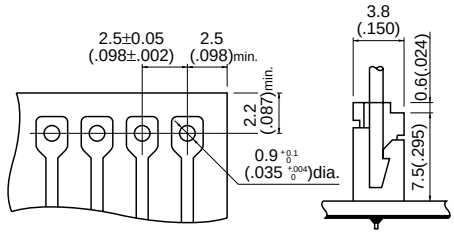

Side entry type

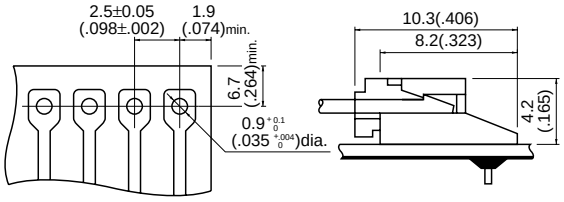

Note:
1. Tolerances are non-cumulative: ±0.05mm(±.002") for all centers.
2. Hole dimension differ according to the kind of PC board and piercing method. If PC boards made of hard material such as FR-4 are used, the hole dimensions should be larger. The dimensions above should serve as a guideline. Contact JST for details.

Shrouded header on radial-tape

<Taping specifications conform to EIAJ-RC-1008B and JIS C0805.>
•The shrouded headers are interchangeable with those of the HR crimp style and insulation displacement connectors .
•Shrouded headers on radial-tape are not TÜV approved.

TS type
(2 circuits)

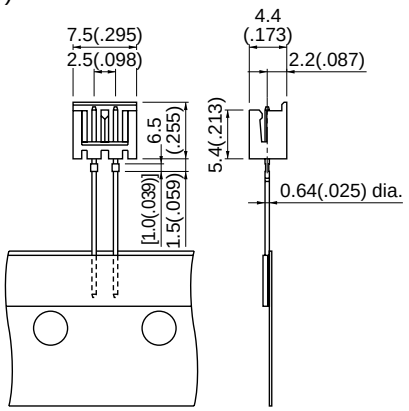

(3 to 8 circuits)

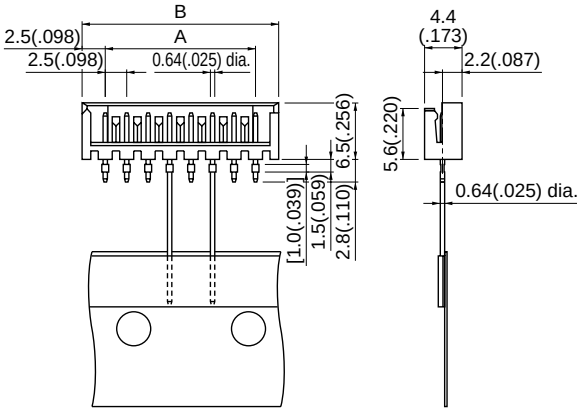

Cir-cuits	Model No.	Dimensions mm(in.)		Q'ty / box
		A	B	
2	**B2B-EH-TS**	–	–	1,400
3	**B3B-EH-TS**	5.0(.197)	10.0(.394)	1,400
4	**B4B-EH-TS**	7.5(.295)	12.5(.492)	700
5	**B5B-EH-TS**	10.0(.394)	15.0(.591)	700
6	**B6B-EH-TS**	12.5(.492)	17.5(.689)	700
7	**B7B-EH-TS**	15.0(.591)	20.0(.787)	700
8	**B8B-EH-TS**	17.5(.689)	22.5(.886)	700

Material and Finish
Pin: Brass, copper-undercoated, tin/lead-plated Wafer: Nylon 66, UL94V-0, natural (white)

<For reference> As the color identification,
the following alphabet shall be put in the underlined part.
For availability, delivery and minimum order quantity, contact JST.

ex. B2B-EH-TS-oo
(blank)…natural (white)
K…black R…red E…blue Y…yellow M…green N…brown

TV4 type

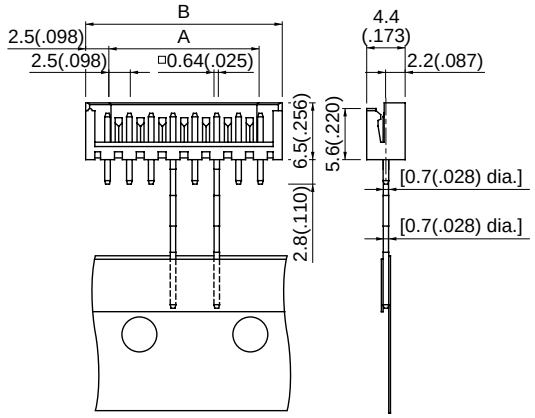

Cir-cuits	Model No.	Dimensions mm(in.)		Q'ty / box
		A	B	
3	**B3B-EH-TV4**	5.0(.197)	10.0(.394)	1,400
4	**B4B-EH-TV4**	7.5(.295)	12.5(.492)	700
5	**B5B-EH-TV4**	10.0(.394)	15.0(.591)	700
6	**B6B-EH-TV4**	12.5(.492)	17.5(.689)	700
7	**B7B-EH-TV4**	15.0(.591)	20.0(.787)	700
8	**B8B-EH-TV4**	17.5(.689)	22.5(.886)	700

Material and Finish
Post: Brass, copper-undercoated, tin/lead-plated Wafer: Nylon 66, UL94V-0, natural (white)

Taping specifications

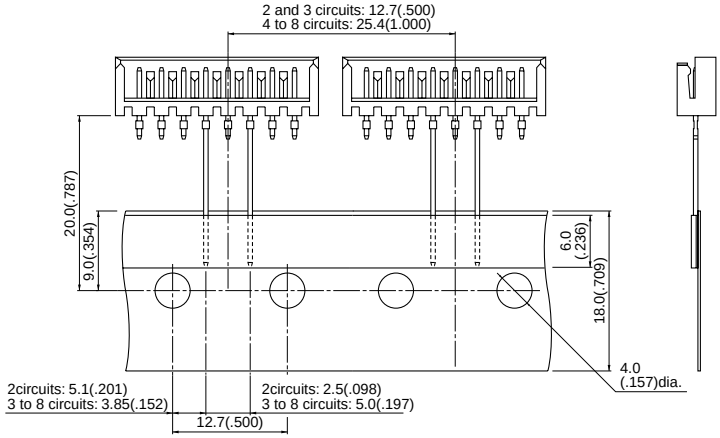

Note: Conforms to JIS C0825.

Packaging specifications

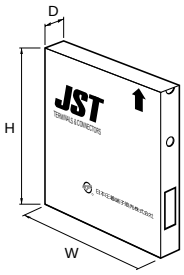

Package type	Flat pack (zigzag folded)
Distance between folds	24 indexing holes per fold (304.8mm/12")
Box size	(316x45x330mm)12.4"(W)x1.8"(D) x13.0"(H)
Distance between the end of the tape and the first connector´s center line (either end)	19.05mm(.750")

Distance between the end of the tape and the first connector's center line (either end)

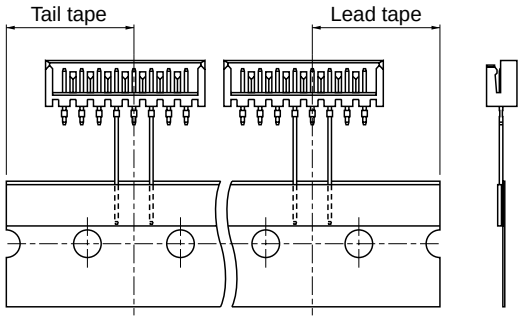

PC board layout (viewed from soldering side) and Assembly layout

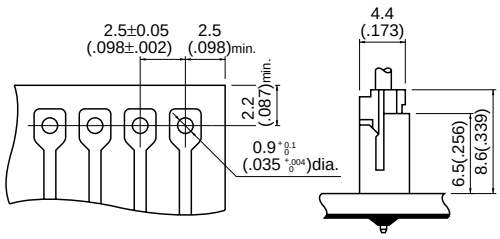

Note:
1. Tolerances are non-cumulative: ±0.05mm(±.002") for all centers.
2. Hole dimension differ according to the kind of PC board and piercing method. If PC boards made of hard material such as FR-4 are used, the hole dimensions should be larger. The dimensions above should serve as a guideline. Contact JST for details.

Applicator for the semi-automatic press AP-K2N

Contact	Crimp applicator MKS-L(-10)		Compact crimp applicator MKS-LS		Strip-crimp applicator MKS-SC
	with safety cover	without safety cover	with safety cover	without safety cover	with safety cover
SEH-001T-P0.6	APLMK SEH001-06	APLNC SEH001-06	APLMKLS SEH001-06	APLLSNC SEH001-06	APLSC SEH001-06
SEH-003T-P0.6L	APLMK SEH003-06	APLNC SEH003-06	–	–	APLSC SEH003-06

Компания «ЭлектроПласт» предлагает заключение долгосрочных отношений при поставках импортных электронных компонентов на взаимовыгодных условиях!

Наши преимущества:

- Оперативные поставки широкого спектра электронных компонентов отечественного и импортного производства напрямую от производителей и с крупнейших мировых складов;
- Поставка более 17-ти миллионов наименований электронных компонентов;
- Поставка сложных, дефицитных, либо снятых с производства позиций;
- Оперативные сроки поставки под заказ (от 5 рабочих дней);
- Экспресс доставка в любую точку России;
- Техническая поддержка проекта, помощь в подборе аналогов, поставка прототипов;
- Система менеджмента качества сертифицирована по Международному стандарту ISO 9001;
- Лицензия ФСБ на осуществление работ с использованием сведений, составляющих государственную тайну;
- Поставка специализированных компонентов (Xilinx, Altera, Analog Devices, Intersil, Interpoint, Microsemi, Aeroflex, Peregrine, Syfer, Eurofarad, Texas Instrument, Miteq, Cobham, E2V, MA-COM, Hittite, Mini-Circuits,General Dynamics и др.);

Помимо этого, одним из направлений компании «ЭлектроПласт» является направление «Источники питания». Мы предлагаем Вам помощь Конструкторского отдела:

- Подбор оптимального решения, техническое обоснование при выборе компонента;
- Подбор аналогов;
- Консультации по применению компонента;
- Поставка образцов и прототипов;
- Техническая поддержка проекта;
- Защита от снятия компонента с производства.

Как с нами связаться

Телефон: 8 (812) 309 58 32 (многоканальный)
Факс: 8 (812) 320-02-42
Электронная почта: org@eplast1.ru
Адрес: 198099, г. Санкт-Петербург, ул. Калинина, дом 2, корпус 4, литера А.