PCB Fuse Clips for ATC/ATM Blade, 5mm, 1/4" & 13/32" Diameter Fuses

1AXXXX Series

For 1/4" Diameter Fuses

1A1119 Series***
With End Stops and Angled In leads
Dimensional Data

RoHS

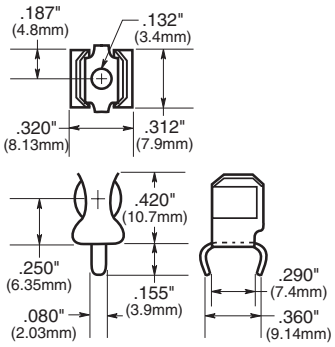

Catalog Number	Clip Mat.*	Finish
1A1119-04	BeCu**	Bright Tin
1A1119-05	BeCu**	Silver
1A1119-10	Cart. Brass	Bright Tin

1A1120 Series***
Without End Stops and Angled In Leads
Dimensional Data

RoHS

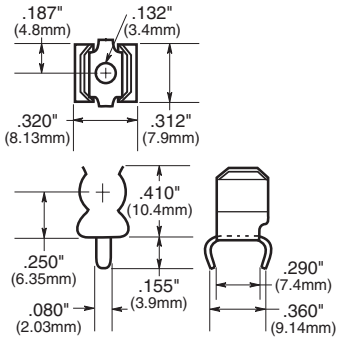

Catalog Number	Clip Mat.*	Finish
1A1120-02	Cart. Brass	Bright Dip
1A1120-05	BeCu**	Silver
1A1120-06	BeCu**	Bright Tin
1A1120-09	Cart. Brass	Bright Tin

1A1907 Series***
With End Stops & Straight Leads
Dimensional Data

RoHS

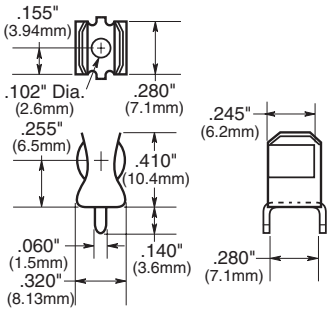

Catalog Number	Clip Mat.*	Finish
1A1907-02	Cart. Brass	None Bright Dipped
1A1907-03	BeCu**	Bright Tin
1A1907-05	BeCu**	Silver
1A1907-06	Cart. Brass	Bright Tin

1A3398 Series***
Without End Stops & Straight Leads
Dimensional Data

RoHS

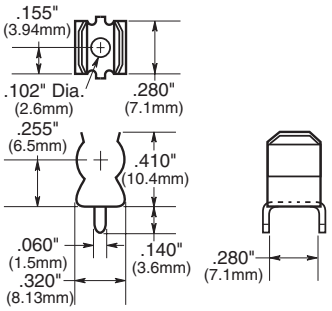

Catalog Number	Clip Mat.*	Finish
1A3398-07	Cart. Brass	Bright Tin

1A4534 Series***
With End Stops & Angled Out Leads
Dimensional Data

RoHS

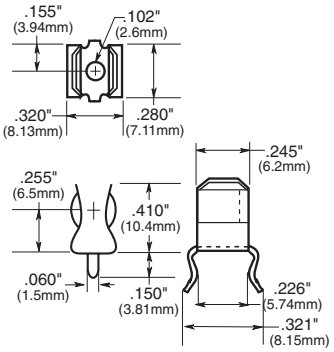

Catalog Number	Clip Mat.*	Finish
1A4534-01	BeCu**	Bright Tin
1A4534-06	Cart. Brass	Bright Tin

1A4533 Series***
Without End Stops & Angled Out Leads
Dimensional Data

RoHS

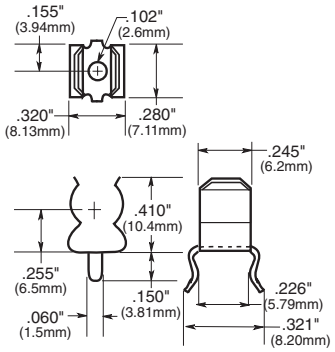

Catalog Number	Clip Mat.*	Finish
1A4533-01	BeCu**	Bright Tin
1A4533-06	Cart. Brass	Bright Tin

*Spg. Br. - Spring Bronze; BeCu - Beryllium Copper; Cart. Brass - Cartridge Brass
**Beryllium copper recommended for currents higher than 15 amps.

*****For RoHS compliant version add "-R" option code suffix to part number.**

PCB Fuse Clips for ATC/ATM Blade, 5mm, 1/4" & 13/32" Diameter Fuses

1AXXXX Series

For 5mm Diameter Fuses

1A5601 Series (0 to 7 amps)
Dimensional Data

RoHS

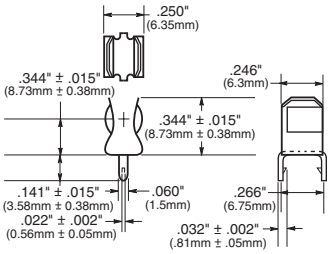

Catalog Number	Clip Mat.*	Finish
1A5601	Cart. Brass	Bright Tin

1A3399 and 1A5018 Series***
With Straight Leads
Dimensional Data

RoHS

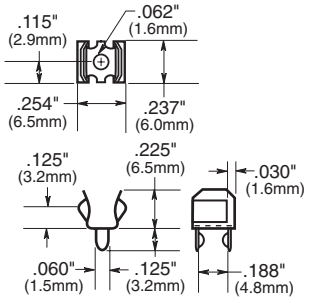

Catalog Number	Clip Mat.*	Finish
1A3399-10	Spg. Br.	Bright Tin
1A3399-01	BeCu**	Silver
1A3399-04	BeCu**	Bright Tin

1A5602 Series (0 to 7 Amps)
Dimensional Data

RoHS

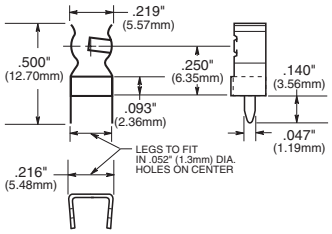

Catalog Number	Clip Mat.	Finish
1A5602	Cart. Brass	Bright Tin

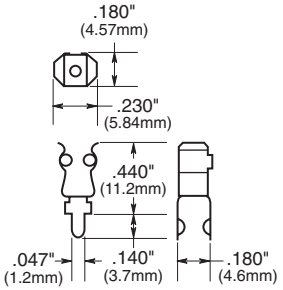

High Profile

Catalog Number	Clip Mat.*	Finish
1A5018-10	Spg. Br.	Bright Tin
1A5018-7	Spg. Br.	Silver

Specifications
5mm PCB Mount Fuseclips
Current Rating: 15A
Voltage Rating: 500Vac
PCB Terminals: Solder Lug

*Spg. Br. - Spring Bronze; BeCu - Beryllium Copper; Cart. Brass - Cartridge Brass.
**Beryllium copper recommended for currents higher than 15 amps.

For 13/32" Diameter Fuses

1A3400 Series***
With End Stops & Straight Leads
Dimensional Data

RoHS

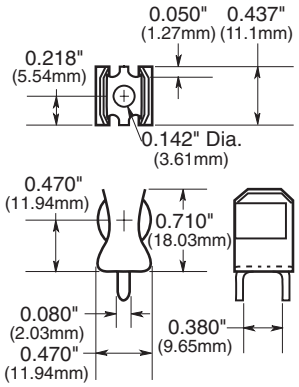

1A3400-09 & 1A3400-10

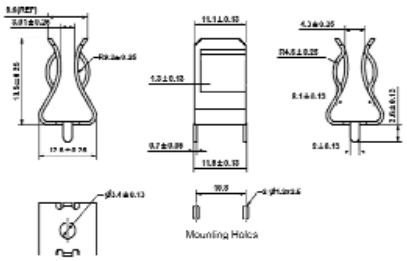

1A3400-12

Specifications:

Catalog Number	Clip Material	Finish	Amp Rating
1A3400-09	Spring Bronze	Bright Tin	20A Max.
1A3400-10	Beryllium Copper	Silver	30A Max.
1A3400-12	Spring Brass	Bright Tin	15A Max.

*****For RoHS compliant version add "-R" option code suffix to part number.**

PCB Fuse Clips for ATC/ATM Blade, 5mm, ¼" & 13/32" Diameter Fuses

1AXXXX Series

ATM Fuses
1A5778 Series
Dimensional Data

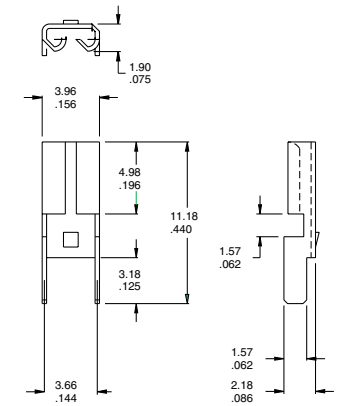

MATERIAL: BRASS, NICKEL PLATED, .30 .012 THICK

1A5779 Series

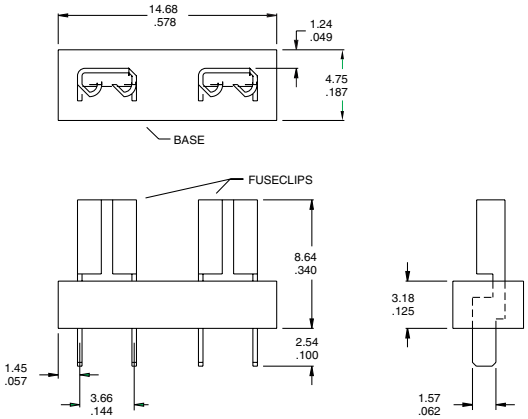

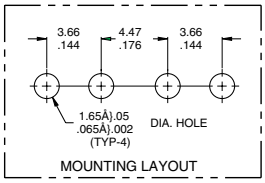

SPECIFICATIONS

FUSECLIPS	BRASS, NICKEL PLATED
BASE MATERIAL	GLASS FILLED NYLON, UL RATED 94V-0
CURRENT RATING	15 AMPS
VOLTAGE RATING	500V AC
TEMPERATURE RATING . .	-50flC -58flF TO 145flC 292flF

ATC Fuses (0 to 20 Amps)
1A5600 Series
Dimensional Data

RoHS

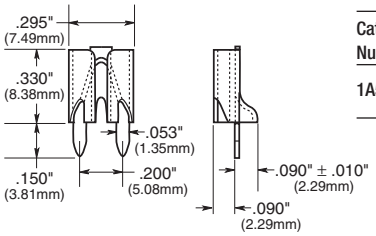

Catalog Number	Clip Mat.*	Finish
1A5600	Cart. Brass	Satin Finish Tin

1A5780 Series
Dimensional Data

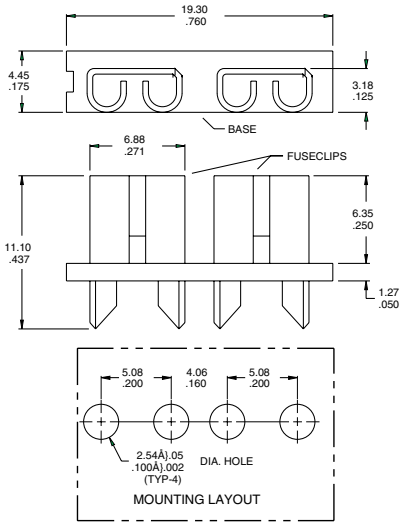

SPECIFICATIONS

FUSECLIPS	BRASS, NICKEL PLATED
BASE MATERIAL	GLASS FILLED NYLON, UL RATED 94V-0
CURRENT RATING	15 AMPS
VOLTAGE RATING	500V AC
TEMPERATURE RATING . .	-50flC TO 145flC -58flF 292flF

*Spg. Br. - Spring Bronze; BeCu - Beryllium Copper; Cart. Brass - Cartridge Brass

*****For RoHS compliant version add "-R" option code suffix to part number.**

PCB Fuse Clips for ATC/ATM Blade, 5mm, ¼" & 13/32" Diameter Fuses

1AXXXX Series

Fuse Clip Catalog Numbers

Footprint Dimensional Data

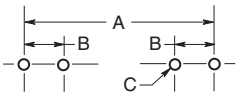

Dimensions

Catalog Number	A: ⅞" (22.2mm)	A: 1" (25.4mm)	A: 1¼" (31.8mm)	A: 1⅜" (34.93mm)	A: 1½" (38.10mm)	A: 20mm	ATC	ATM	B Tabs	C (4 holes)	Board Thickness
1A5778-	—	—	—	—	—	—	—	0.464" (11.79)	0.144" (3.66)	0.065"±0.002" (1.65±0.05)	0.062" (1.57)
1A5779-	—	—	—	—	—	—	—	0.464" (11.79)	0.144" (3.66)	0.065"±.002" (1.65±.05)	0.062" (1.57)
1A5780-	—	—	—	—	—	—	0.560 (14.22)	—	0.200" (5.08)	0.100"±0.002" (2.54±0.05)	0.062" (1.57)
1A3398- 1A1907-	1.00" (25.40)	1.125" (28.58)	1.375" (34.920)	—	—	—	—	—	0.295"-0.305" (7.49-7.75)	0.067"-.070" (1.70-1.78)	0.093" (2.36)
1A1119-	1.00" (25.40)	1.125" (28.58)	1.375" (34.92)	—	—	—	—	—	0.295"-0.305" (7.49-7.75)	0.093"±0.002" (2.36±0.05)	0.062"to 0.125" (1.57to3.18)
1A1120-	1.00" (25.40)	1.125" (28.58)	1.375" (34.920)	—	—	—	—	—	0.295"-0.305" (7.49-7.75)	0.093"±0.002" (2.36±0.05)	0.062"to 0.125" (1.57 to 3.18)
1A3399-	—	—	—	—	—	0.875" (22.23)	—	—	0.200" (5.08)	0.067"-.070" (1.70-1.78)	093" (2.36)
1A3400-	—	—	—	1.50" (38.10)	1.625"— (41.28)		—	—	0.405" (10.29)	0.091"-.095" (2.31-2.41)	0.125" (3.18)
1A4533-	1.00" (25.40)	1.125" (28.58)	1.375" (34.920)	—	—	—	—	—	0.300" (7.62)	0.067"-.070" (1.70-1.78)	0.062" (1.57)
1A4534-	1.00" (25.40)	1.125" (28.58)	1.375" (34.920)	—	—	—	—	—	0.300" (7.62)	0.067"-.070" (1.70-1.78)	0.062" (1.57)
1A5018-	—	—	—	—	—	0.820"±0.015" (20.80±0.38)	—	—	0.180" (4.6)	0.053"-.002" (1.35-0.05)	0.093" (2.36)
1A5600-	—	—	—	—	—	—	—	—	0.200" (5.08)	0.052"±0.003" (1.32±0.077)	0.125"max. (3.18)
1A5601-	—	—	—	—	—	0.820"±0.015" (20.80±0.38)	—	—	0.266" (6.76)	0.067"±0.003" (1.70±0.074)	0.062" (1.57)
1A5602-	—	—	—	—	—	—	—	—	0.220" (5.588)		0.125"max. (3.175)

*Spg. Br. - Spring Bronze; BeCu - Beryllium Copper; Cart. Brass - Cartridge Brass
**Beryllium copper recommended for currents higher than 15 amps.

The only controlled copy of this Data Sheet is the electronic read-only version located on the Cooper Bussmann Network Drive. All other copies of this document are by definition uncontrolled. This bulletin is intended to clearly present comprehensive product data and provide technical information that will help the end user with design applications. Cooper Bussmann reserves the right, without notice, to change design or construction of any products and to discontinue or limit distribution of any products. Cooper Bussmann also reserves the right to change or update, without notice, any technical information contained in this bulletin. Once a product has been selected, it should be tested by the user in all possible applications.

© 2011 Cooper Bussmann
www.cooperbussmann.com

Компания «ЭлектроПласт» предлагает заключение долгосрочных отношений при поставках импортных электронных компонентов на взаимовыгодных условиях!

Наши преимущества:

- Оперативные поставки широкого спектра электронных компонентов отечественного и импортного производства напрямую от производителей и с крупнейших мировых складов;
- Поставка более 17-ти миллионов наименований электронных компонентов;
- Поставка сложных, дефицитных, либо снятых с производства позиций;
- Оперативные сроки поставки под заказ (от 5 рабочих дней);
- Экспресс доставка в любую точку России;
- Техническая поддержка проекта, помощь в подборе аналогов, поставка прототипов;
- Система менеджмента качества сертифицирована по Международному стандарту ISO 9001;
- Лицензия ФСБ на осуществление работ с использованием сведений, составляющих государственную тайну;
- Поставка специализированных компонентов (Xilinx, Altera, Analog Devices, Intersil, Interpoint, Microsemi, Aeroflex, Peregrine, Syfer, Eurofarad, Texas Instrument, Miteq, Cobham, E2V, MA-COM, Hittite, Mini-Circuits,General Dynamics и др.);

Помимо этого, одним из направлений компании «ЭлектроПласт» является направление «Источники питания». Мы предлагаем Вам помощь Конструкторского отдела:

- Подбор оптимального решения, техническое обоснование при выборе компонента;
- Подбор аналогов;
- Консультации по применению компонента;
- Поставка образцов и прототипов;
- Техническая поддержка проекта;
- Защита от снятия компонента с производства.

Как с нами связаться

Телефон: 8 (812) 309 58 32 (многоканальный)
Факс: 8 (812) 320-02-42
Электронная почта: org@eplast1.ru
Адрес: 198099, г. Санкт-Петербург, ул. Калинина, дом 2, корпус 4, литера А.