THIS DRAWING IS UNPUBLISHED. RELEASED FOR PUBLICATION 20
© COPYRIGHT 20 BY TYCO ELECTRONICS CORPORATION. ALL RIGHTS RESERVED.

LOC	DIST
-	-

REVISIONS

P	LTR	DESCRIPTION	DATE	DWN	APVD
	E	REV PER ECO-08-032072	19JAN2009	CR	PD

1. PART NUMBER CHANGES AND OR DESIGN CHANGES AFFECTING ITEM INTERCHANGEABILITY REQUIRE PRIOR TYCO ELECTRONICS APPROVAL AND AUTHORIZATION BY REVISION TO THIS DRAWING.

2. MATERIAL:
   INSULATORS: THERMOPLASTIC. GLASS REINFORCED UL94V-0 FLAMMABILITY RATED.
   CONTACTS: COPPER ALLOY
3. FINISHES:
   CONTACT PLATING: SELECTIVE GOLD: 0.76µm MIN THK OVER NICKEL: 1.27µm MIN THK
   PCB TERMINATION: TIN PLATED, MATTE FINISH: 1.78µm MIN THK OVER NICKEL: 1.27µm MIN THK

4. CONNECTOR ACCEPTS 2.36±0.13 THK PCB.

5. KEEP OUT AREA FOR COMPONENTS ONLY.

6. FEATURE REQUIRED FOR USE WITH LATCH.

7. CAUTION:
   LATCHES ARE INTENDED FOR RETENTION OF PC BOARD TO CONNECTOR. DO NOT ATTEMPT TO FULLY EJECT PC BOARD FROM CONNECTOR WHILE DISENGAGING LATCHES, DAMAGE TO LATCHES AND OR CONNECTOR MAY OCCUR.

8. RECOMMENDED GOLD FINGER LENGTH FOR RELIABLE CONTACT.

9. A REFERENCE DIMENSION (X.XX)IS WITHOUT TOLERANCE AND USED FOR INFORMATION PURPOSE ONLY.

10. ITEMS PROVIDED TO THIS SPECIFICARION TO BE PERNAMENTLY IDENTIFIED PER THE FOLLOWING IDENTIFIER:

YEAR WEEK

TYCO ELECTRONICS PN DATE CODE (e.g. 0425)

XXXXXXX-X XXXX

11. REFERENCE TYCO ELECTRONICS PN 1766443-1

12. RECOMMENDED PRINTED CIRCUIT HOLE:
   FINISHED HOLE: Ø1.02±0.08
   DRILLED HOLE: Ø1.15±0.013
   COPPER PLATE: 0.025 MINIMUM (PER SURFACE)
   TIN PLATE: 0.008 MINIMUM (PER SURFACE)

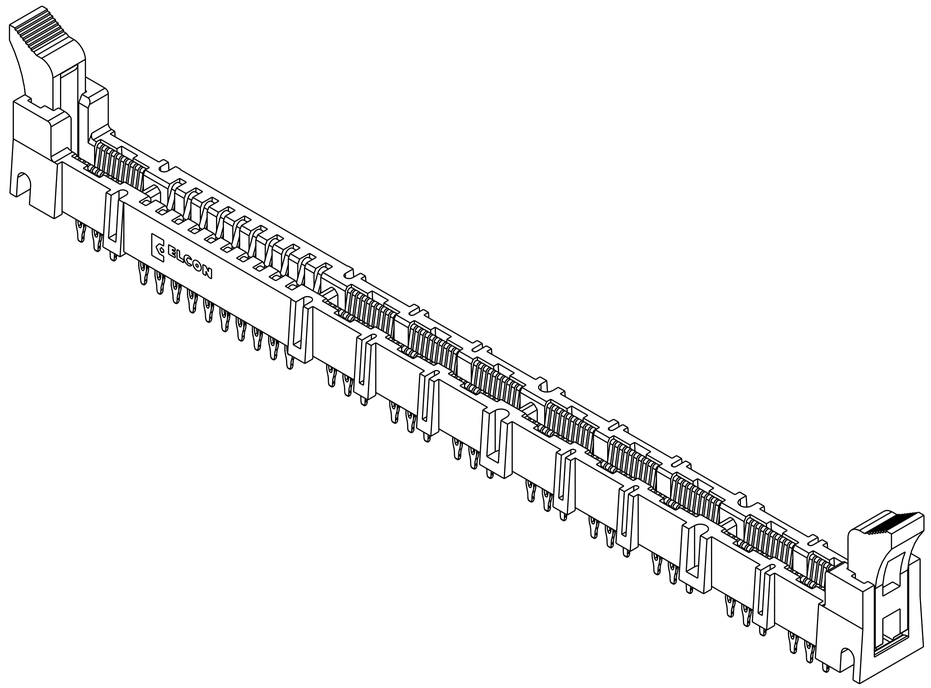

THIS DRAWING IS A CONTROLLED DOCUMENT FOR TYCO ELECTRONICS CORPORATION. IT IS SUBJECT TO CHANGE AND THE CONTROLLING ENGINEERING ORGANIZATION SHOULD BE CONTACTED FOR THE LATEST REVISION.

DWN	C.ROHLER	19JAN2009
CHK	P.DAMATO	19JAN2009
APVD	M.PERCHERKE	19JAN2009

Tyco Electronics
Tyco Electronics
Harrisburg, PA 17105-3608

DIMENSIONS: mm

TOLERANCES UNLESS OTHERWISE SPECIFIED:
0 PLC ±-
1 PLC ±.5
2 PLC ±.25
3 PLC ±-
4 PLC ±-
ANGLES ±.5

MATERIAL - -
FINISH - -

PRODUCT SPEC -
APPLICATION SPEC -
WEIGHT -

NAME
MC-P9S10 MINI CROWNEDGE
SOCKET CONNECTOR, COMPLIANT TAIL
-

SIZE	CAGE CODE	DRAWING NO	RESTRICTED TO
A1	00779	C-1766443	-

CUSTOMER DRAWING | SCALE 3:1 | SHEET 1 OF 4 | REV E

AMP 4805 REV 31MAR2000

Pro/ENGINEER DRAWING

THIS DRAWING IS UNPUBLISHED. RELEASED FOR PUBLICATION 20
© COPYRIGHT 20 BY TYCO ELECTRONICS CORPORATION. ALL RIGHTS RESERVED.

LOC	DIST
-	-

REVISIONS

P	LTR	DESCRIPTION	DATE	DWN	APVD
	-	SEE SHEET 1	-	-	-

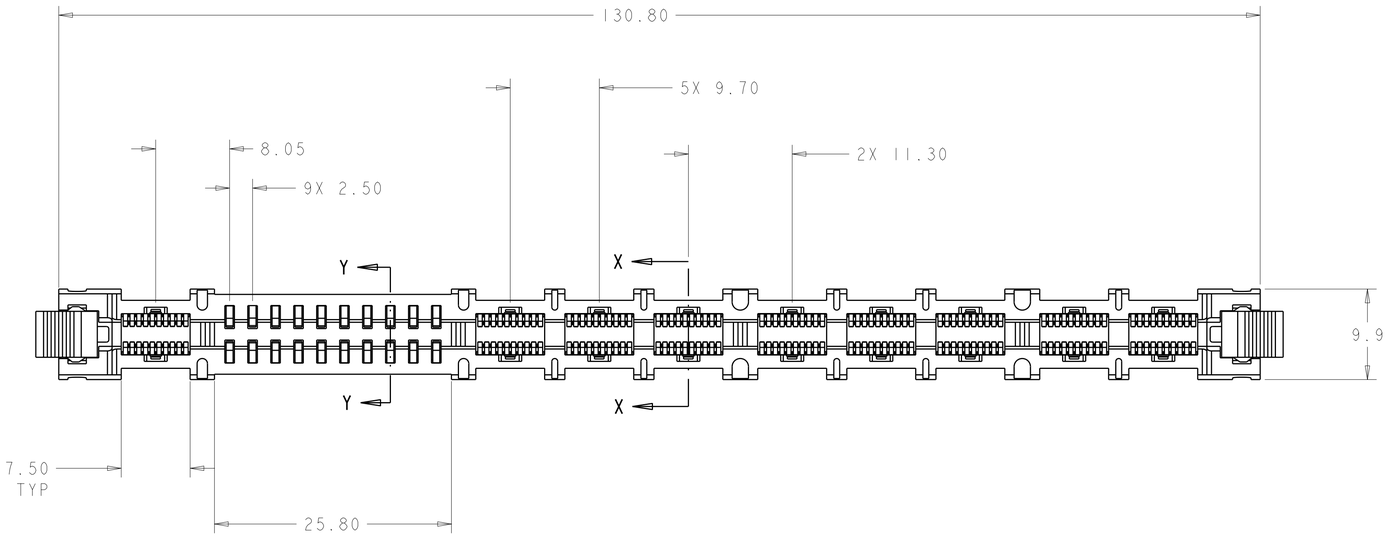

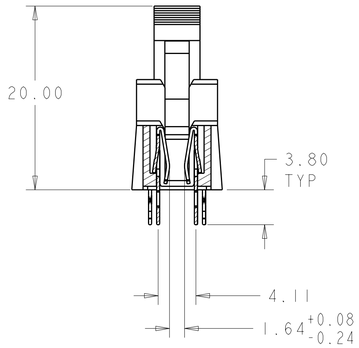

SECTION X-X
ROTATED 90° CW

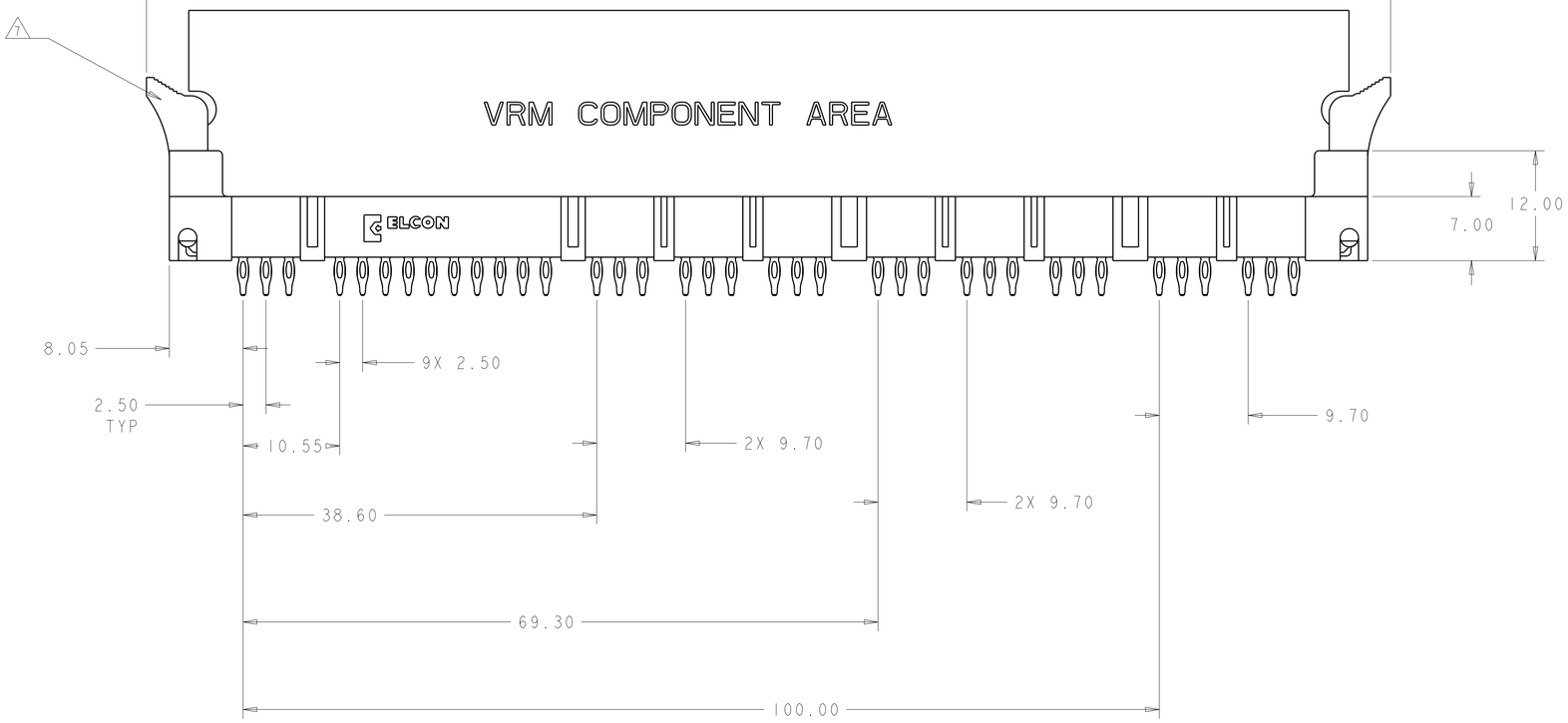

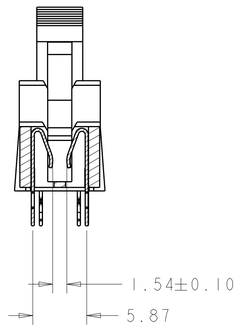

SECTION Y-Y
ROTATED 90° CW

THIS DRAWING IS A CONTROLLED DOCUMENT FOR TYCO ELECTRONICS CORPORATION. IT IS SUBJECT TO CHANGE AND THE CONTROLLING ENGINEERING ORGANIZATION SHOULD BE CONTACTED FOR THE LATEST REVISION.

DIMENSIONS: mm

TOLERANCES UNLESS OTHERWISE SPECIFIED:
0 PLC ±-
1 PLC ±.5
2 PLC ±.25
3 PLC ±-
4 PLC ±-
ANGLES ±.5

MATERIAL - -
FINISH - -

DWN	C.ROHLER	19JAN2009
CHK	P.DAMATO	19JAN2009
APVD	M.PERCHERKE	19JAN2009

PRODUCT SPEC -
APPLICATION SPEC -
WEIGHT -

Tyco Electronics
Tyco Electronics
Harrisburg, PA 17105-3608

NAME MC-P9S10 MINI CROWNEDGE SOCKET CONNECTOR, COMPLIANT TAIL
-

SIZE	CAGE CODE	DRAWING NO	RESTRICTED TO
A1	00779	C-1766443	-

CUSTOMER DRAWING

SCALE	SHEET	OF	REV
3:1	2	4	E

THIS DRAWING IS UNPUBLISHED. RELEASED FOR PUBLICATION 20
© COPYRIGHT 20 BY TYCO ELECTRONICS CORPORATION. ALL RIGHTS RESERVED.

LOC	DIST
-	-

REVISIONS

P	LTR	DESCRIPTION	DATE	DWN	APVD
	-	SEE SHEET 1	-	-	-

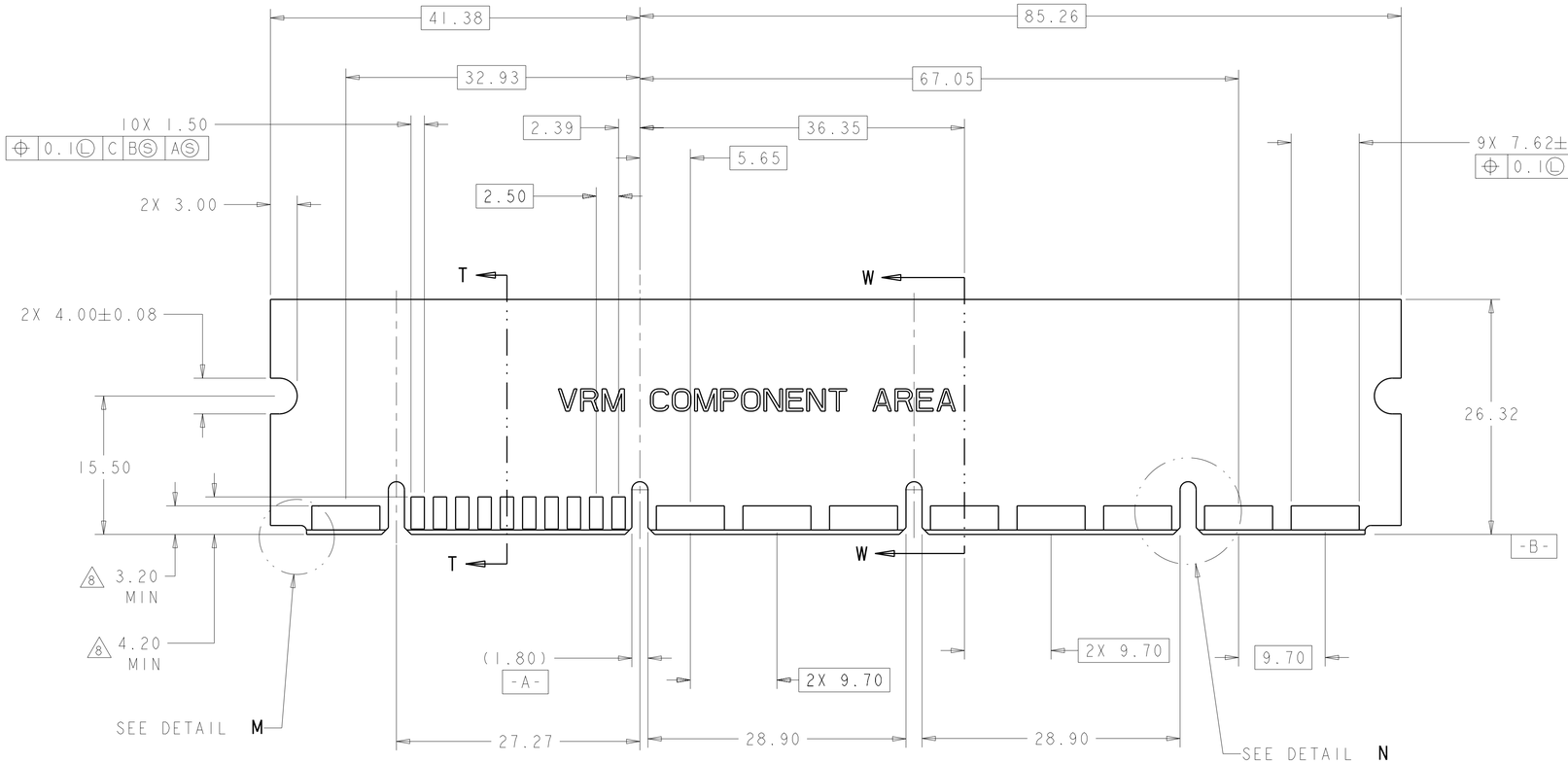

RECOMMENDED MATING BOARD

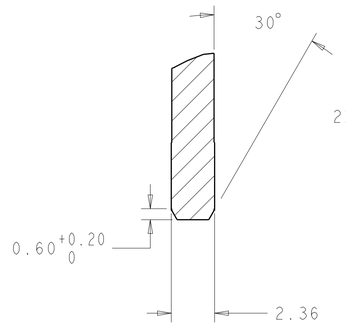

SECTION T-T
SCALE 6:1

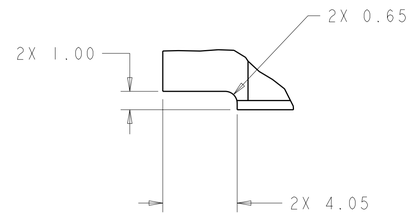

DETAIL M
SCALE 6:1

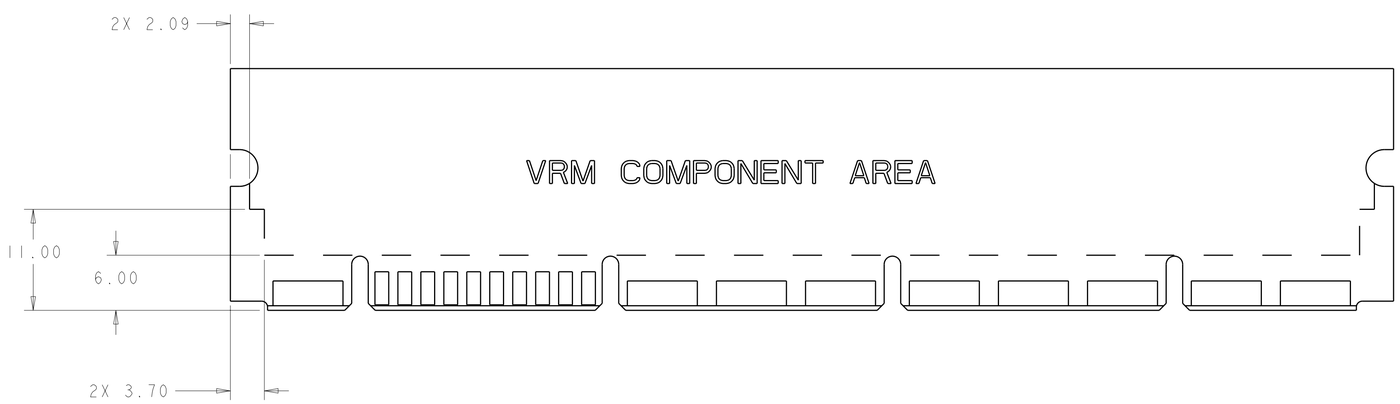

RECOMMENDED PCB KEEP OUT AREA

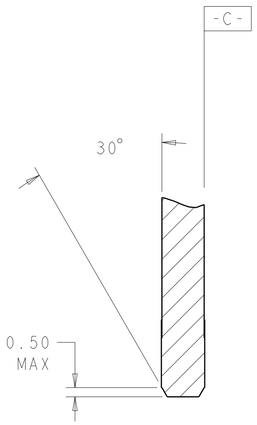

SECTION W-W
SCALE 6:1

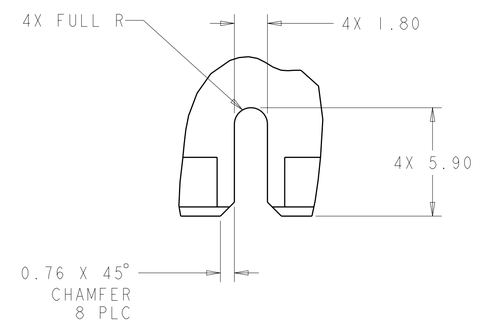

DETAIL N
SCALE 6:1

THIS DRAWING IS A CONTROLLED DOCUMENT FOR TYCO ELECTRONICS CORPORATION. IT IS SUBJECT TO CHANGE. ANY QUESTIONS REGARDING THIS ORGANIZATION SHOULD BE CONTACTED FOR THE LATEST REVISION.

DIMENSIONS: mm

TOLERANCES UNLESS OTHERWISE SPECIFIED:
0 PLC ±-
1 PLC ±.5
2 PLC ±.25
3 PLC ±-
4 PLC ±-
ANGLES ±.5

MATERIAL - -
FINISH - -

DWN	C. ROHLER	19JAN2009
CHK	P. DAMATO	19JAN2009
APVD	M. PERCHERKE	19JAN2009

PRODUCT SPEC -
APPLICATION SPEC -
WEIGHT -

Tyco Electronics
Tyco Electronics
Harrisburg, PA 17105-3608

NAME
MC-P9S10 MINI CROWNEDGE
SOCKET CONNECTOR, COMPLIANT TAIL
-

SIZE	CAGE CODE	DRAWING NO	RESTRICTED TO
A1	00779	C-1766443	-

CUSTOMER DRAWING | SCALE 3:1 | SHEET 3 OF 4 | REV E

THIS DRAWING IS UNPUBLISHED. RELEASED FOR PUBLICATION 20
© COPYRIGHT 20 BY TYCO ELECTRONICS CORPORATION. ALL RIGHTS RESERVED.

LOC	DIST
-	-

REVISIONS

P	LTR	DESCRIPTION	DATE	DWN	APVD
	-	SEE SHEET 1	-	-	-

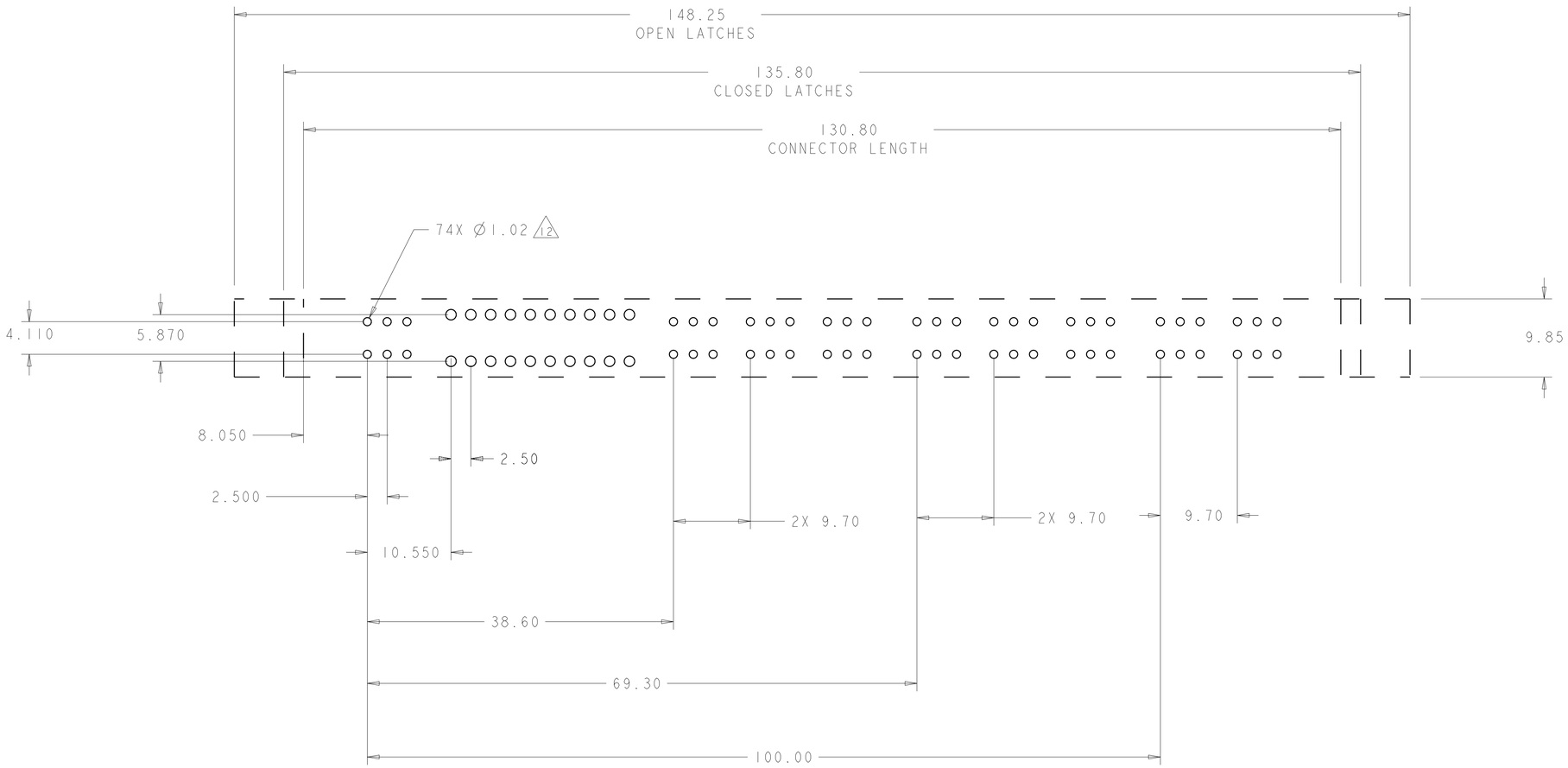

RECOMMENDED PCB LAYOUT

THIS DRAWING IS A CONTROLLED DOCUMENT FOR TYCO ELECTRONICS CORPORATION. IT IS SUBJECT TO CHANGE WITHOUT NOTICE. CONTACT THE ORGANIZATION SHOULD BE CONTACTED FOR THE LATEST REVISION.

DIMENSIONS: mm

TOLERANCES UNLESS OTHERWISE SPECIFIED:
0 PLC ±-
1 PLC ±.5
2 PLC ±.25
3 PLC ±-
4 PLC ±-
ANGLES ±.5

MATERIAL - -
FINISH - -

DWN	C. ROHLER	19JAN2009
CHK	P. DAMATO	19JAN2009
APVD	M. PERCHERKE	19JAN2009

PRODUCT SPEC -
APPLICATION SPEC -
WEIGHT -

Tyco Electronics
Tyco Electronics
Harrisburg, PA 17105-3608

NAME
MC-P9S10 MINI CROWNEDGE
SOCKET CONNECTOR, COMPLIANT TAIL
-

SIZE	CAGE CODE	DRAWING NO	RESTRICTED TO
A1	00779	C-1766443	-

CUSTOMER DRAWING | SCALE 3:1 | SHEET 4 OF 4 | REV E

Компания «ЭлектроПласт» предлагает заключение долгосрочных отношений при поставках импортных электронных компонентов на взаимовыгодных условиях!

Наши преимущества:

- Оперативные поставки широкого спектра электронных компонентов отечественного и импортного производства напрямую от производителей и с крупнейших мировых складов;
- Поставка более 17-ти миллионов наименований электронных компонентов;
- Поставка сложных, дефицитных, либо снятых с производства позиций;
- Оперативные сроки поставки под заказ (от 5 рабочих дней);
- Экспресс доставка в любую точку России;
- Техническая поддержка проекта, помощь в подборе аналогов, поставка прототипов;
- Система менеджмента качества сертифицирована по Международному стандарту ISO 9001;
- Лицензия ФСБ на осуществление работ с использованием сведений, составляющих государственную тайну;
- Поставка специализированных компонентов (Xilinx, Altera, Analog Devices, Intersil, Interpoint, Microsemi, Aeroflex, Peregrine, Syfer, Eurofarad, Texas Instrument, Miteq, Cobham, E2V, MA-COM, Hittite, Mini-Circuits,General Dynamics и др.);

Помимо этого, одним из направлений компании «ЭлектроПласт» является направление «Источники питания». Мы предлагаем Вам помощь Конструкторского отдела:

- Подбор оптимального решения, техническое обоснование при выборе компонента;
- Подбор аналогов;
- Консультации по применению компонента;
- Поставка образцов и прототипов;
- Техническая поддержка проекта;
- Защита от снятия компонента с производства.

Как с нами связаться

Телефон: 8 (812) 309 58 32 (многоканальный)
Факс: 8 (812) 320-02-42
Электронная почта: org@eplast1.ru
Адрес: 198099, г. Санкт-Петербург, ул. Калинина, дом 2, корпус 4, литера А.