337/387 SERIES

Card Edge Connector 0.156" (3.96mm) Pitch

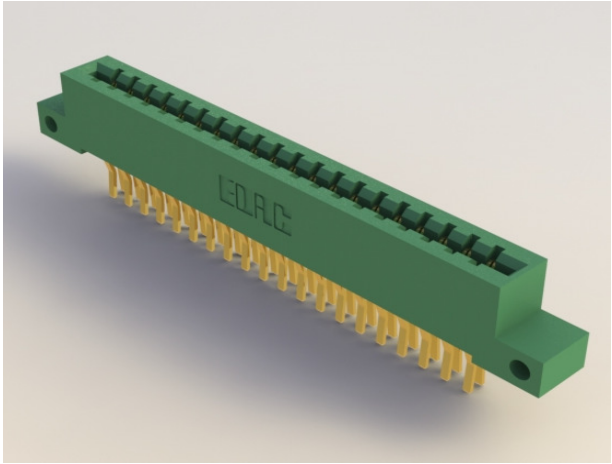

FEATURES

- **0.156" (3.96mm) Contact Spacing by 0.200" 5.08mm) Row Spacing**
- **Accepts .062" (1.57mm) Nominal Thickness P.C. Board**
- **High Profile Insulator Body, .600" (15.24mm)**
- **Card Slot Depth of .330" (8.38mm)**
- **Contact Termination Options include P.C. Tail, Wire Hole, Wire Wrap, 90° and Extender Board Bends**
- **Single or Dual Row Configurations**
- **Large Variety of Mounting Options, Flush or Offset Lugs**
- **Accepts between Contact and In-Contact Polarizing Keys**
- **Pre-assembled Card Guides are available**
- **RoHS Compliant, UL Recognized**

Specifications:

Insulator Material	UL 94V-0 Thermoplastic Polyester
Contact Material	Copper Alloy
Contact Plating	Gold Plating on mating area and Tin Plating on tails with Nickel underplating all over
Current Rating	3 Ampere
Contact Resistance	10milliohms maximum
Dielectric Withstand Voltage	1800 VAC rms at sea level between adjacent contacts
Insulation Resistance	5000 Megohms minimum
Operating Temperature	Operating Temperature: -40°C to +105°C
Insertion Force	16oz (4.45N) maximum per contact pair when tested with .070" (1.78mm) thick gauge
Withdrawal Force	1oz (0.28N) minimum per contact pair when tested with .054" (1.37mm) thick gauge

Example Part Number 337-086-524-204

- Series
- Total Number of Contacts
- Contact Code
- Contact Rows and Insulator Style
- Mounting Options

Series	Insulator Color
337	Green
387	Black

Contact Rows and Insulator Style

1	Single Row, Flush Mounting Lugs
2	Dual Row, Flush Mounting Lugs
6	Single Row, .170 (4.32) Offset Lugs
8	Dual Row, .170 (4.32) Offset Lugs

Total Number of Contacts:	Contact Rows
006, 007, ... 043	Single Row
012, 014, ... 086	Dual Row

Contact Code		Description & Tail Size	Tail Length "G"
500	Wire Hole	.050 x .025 (1.27 x 0.64)	.260 (6.60)
520	P.C. Tail	.030 x .018 (0.76 x 0.46)	.175 (4.45)
521	P.C. Tail	.025 Square (0.64 Square)	.150 (3.81)
523	P.C. Tail	.025 Square (0.64 Square)	.390 (9.91)
524	P.C. Tail	.018 Square (0.46 Square)	.175 (4.45)
540	Wire Wrap	.025 Square (0.64 Square)	.560 (14.22)
541	Wire Wrap	.025 Square (0.64 Square)	.750 (19.05)
542	Wire Wrap	.025 Square (0.64 Square)	.645 (16.38)
544	Wire Wrap	.050 x .025 (1.27 x 0.64)	.750 (19.05)
555	EXTENDER BOARD BEND (Code 500 Contacts)		
556	EXTENDER BOARD BEND (Code 520 Contacts)		
558	90 DEGREE BEND (Code 541 Contacts)		
559	90 DEGREE BEND (Code 541 Contacts)		
560	EXTENDER BOARD BEND (Code 523 Contacts)		

Mounting Options

01	No Mounting Lug
02	Ø.128" (Ø3.25mm) Mounting Holes
03	Ø.116" (Ø2.95mm) I.D. Floating Eyelets
04	Ø.156" (Ø3.96mm) Mounting Holes
07	M3-0.5 Metric Threaded Inserts
08	#4-40 Unified Threaded Inserts
12	Ø.128" (Ø3.25mm) Side Mounting Holes
58	.468" (11.89mm) Offset Card Guides
68	.344" (8.74mm) Offset Card Guides
78	In-Line Card Guides

Ordering Code Notes:

1) All connector sizes up to 43 contacts single row / 086 contacts dual row are available upon request.
2) The 500 contact code is only available in the 337 series. Green polyphenylene sulphide insulator material will be supplied.
3) For details of the extender board and 90 degree bends refer to our website.
4 For lugless connectors, code 01 mounting, specify contact row code 1 or 2.
5) In-line card guides are only with offset mounting lugs.
6) For details of the mounting options refer to next pages.

337/387 SERIES

Card Edge Connector 0.156" (3.96mm) Pitch

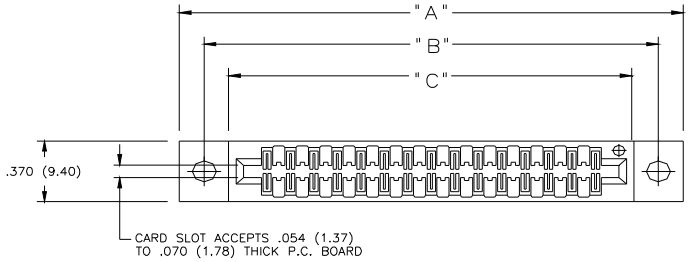

SECTIONS THROUGH CONTACT POSITION

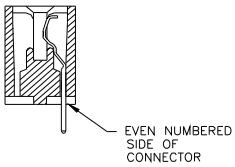

SINGLE ROW

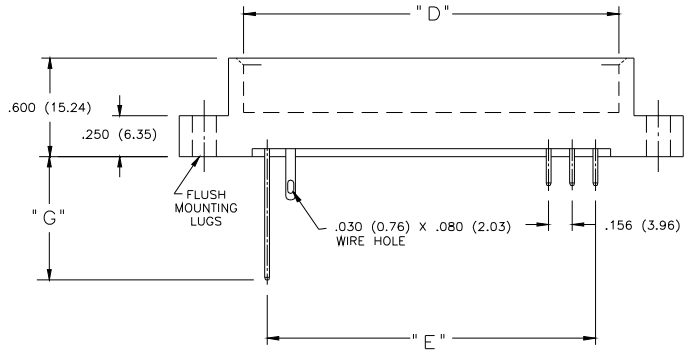

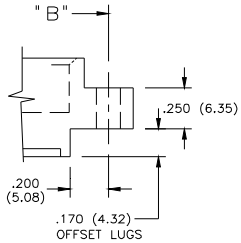

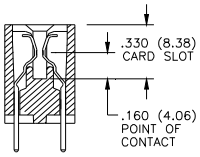

DUAL ROW

IN–CONTACT POLARIZING KEY

P/N 345–240–328

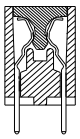

BETWEEN CONTACT POLARIZING KEY

P/N 306–240–318

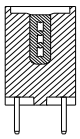

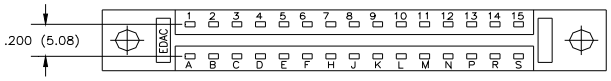

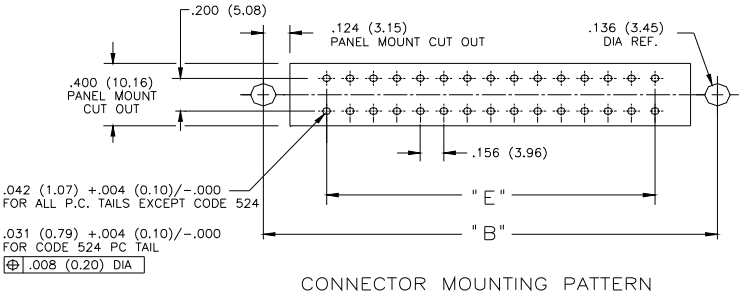

CONNECTOR MOUNTING PATTERN

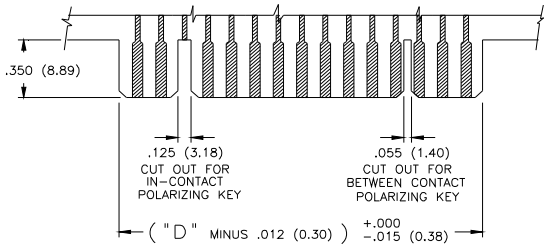

RECOMMENDED DAUGHTER BOARD

NUMBER OF CONTACTS		"A"		"B"		"C"		"D"		"E"	
Single	Double	Inch	mm	Inch	mm	Inch	mm	Inch	mm	Inch	mm
6	12	1.842	46.79	1.532	38.91	1.246	31.65	1.100	27.94	0.780	19.81
10	20	2.466	62.64	2.156	54.76	1.870	47.50	1.724	43.79	1.404	35.66
12	24	2.778	70.56	2.468	62.69	2.182	55.42	2.036	51.71	1.716	43.59
15	30	3.246	82.45	2.936	74.57	2.650	67.31	2.504	63.60	2.184	55.47
18	36	3.714	94.34	3.404	86.46	3.118	79.20	2.972	75.49	2.652	67.36
22	44	4.338	110.19	4.028	102.31	3.742	95.05	3.596	91.34	3.276	83.21
25	50	4.806	122.07	4.496	114.20	4.210	106.93	4.064	103.23	3.744	95.10
26	52	4.962	126.03	4.652	118.16	4.366	110.90	4.220	107.19	3.900	99.06
28	56	5.278	134.06	4.964	126.09	4.678	118.82	4.532	115.11	4.212	106.98
31	62	5.742	145.85	5.432	137.97	5.146	130.71	5.000	127.00	4.680	118.87
33	66	6.054	153.77	5.744	145.90	5.458	138.63	5.312	134.92	4.992	126.80
36	72	6.522	165.66	6.212	157.78	5.926	150.52	5.780	146.81	5.460	138.68
43	86	7.614	193.40	7.304	185.52	7.018	178.26	6.872	174.55	6.552	166.42

337/387 SERIES

Card Edge Connector 0.156" (3.96mm) Pitch

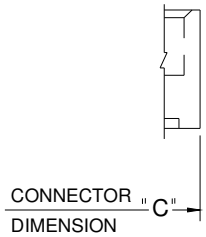

MOUNTING OPTION
CODE x01
(NO MOUNTING LUGS)

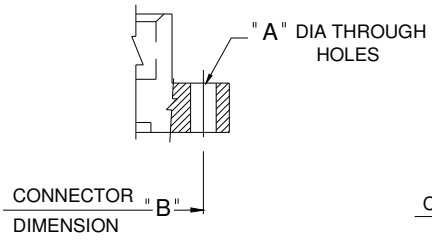

MOUNTING OPTION
CODES x02 AND xO4
(THROUGH MOUNTING HOLES)

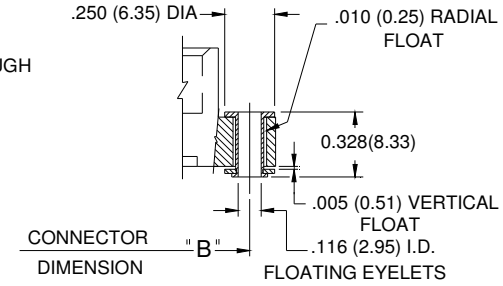

MOUNTING OPTION
CODE x03
(FLOATING EYLETS)

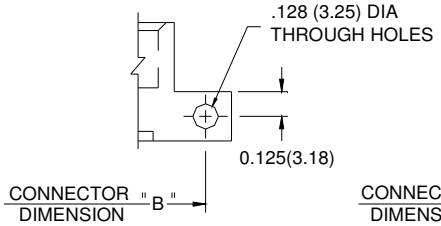

MOUNTING OPTION
CODE x12
(SIDE MOUNTING HOLES)

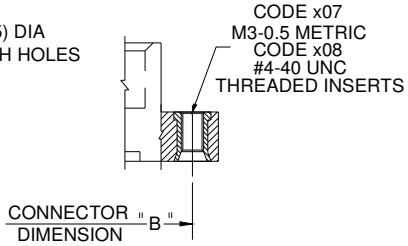

MOUNTING OPTION
CODES x07 & x08
(THREADED INSERTS)

CODE X02 AND X04- THROUGH MTG. HOLES		
	CODE X02	CODE X04
"A" DIA.	0.128(3.25)	0.156(3.96)
CODE X07 AND X08- THREADED INSERTS		
	CODE X07	CODE X08
INSERT	M3-0.5(METRIC)	#4-40 UNC

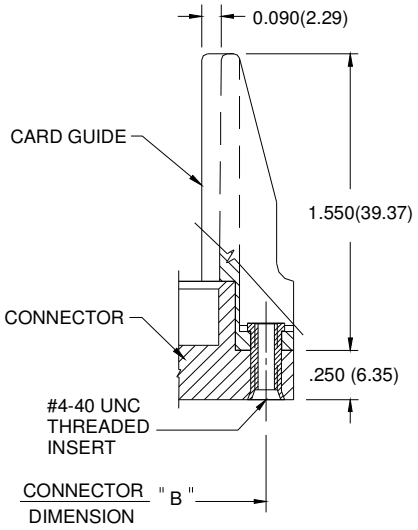

MOUNTING OPTION
CODES x78
(IN-LINE CARD GUIDE)

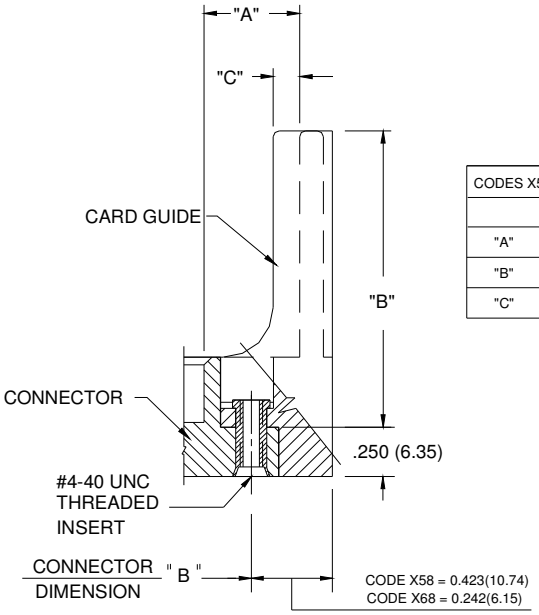

MOUNTING OPTION
CODES x58 & 68
(OFFSET CARD GUIDES)

CODES X58 & X68- OFFSET CARD GUIDES		
	CODE X58	CODE X68
"A"	0.468(11.89)	0.344(8.74)
"B"	2.755(69.98)	2.505(63.63)
"C"	0.125(3.05)	0.060(1.52)

337/387 SERIES

Card Edge Connector 0.156" (3.96mm) Pitch

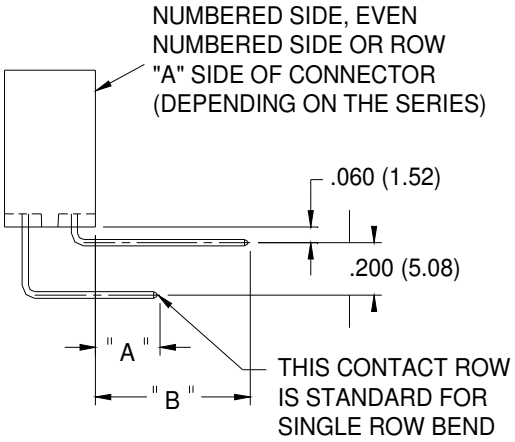

CONTACT CODE 558

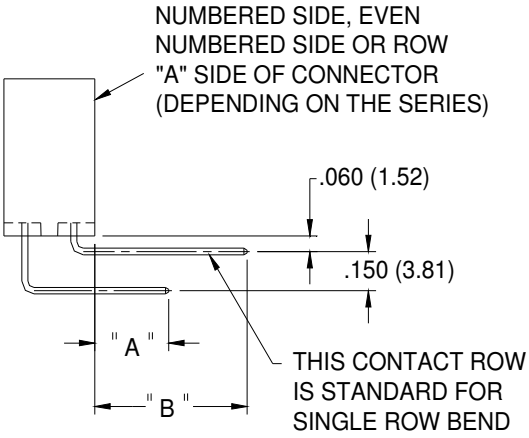

CONTACT CODE 559

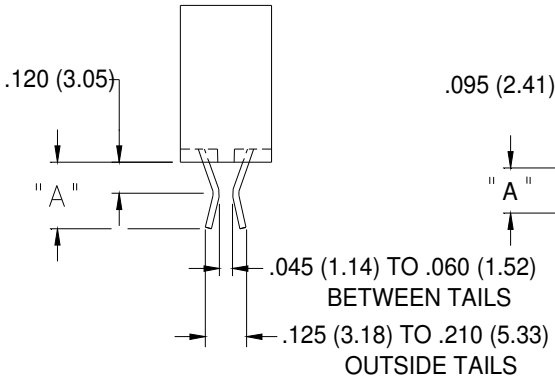

CONTACT CODE 555 BEND USES
WIRE HOLE CONTACTS

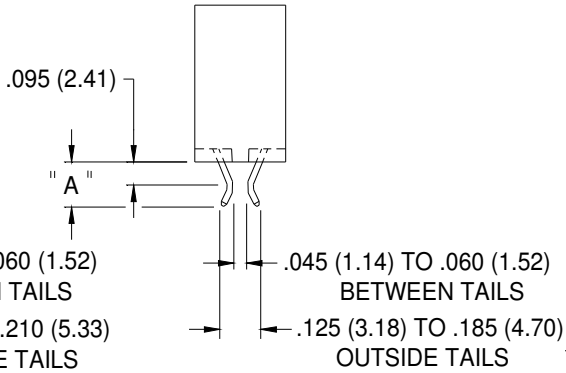

CONTACT CODE 556

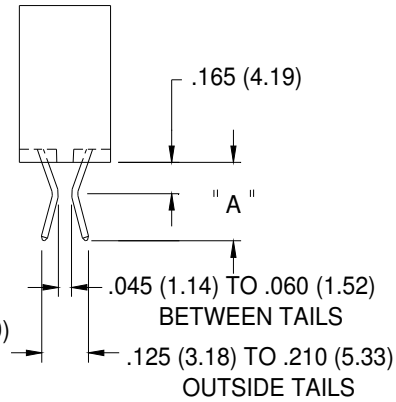

CONTACT CODE 560

MTG. OPTION	A	B
555	0.245(6.22)	
556	0.170(4.32)	
558	0.235(5.97)	0.635(16.13)
559	0.285(7.24)	0.635(16.13)
560	0.375(9.53)	

IN-CONTACT
POLARIZING KEY

P/N 345-240-328

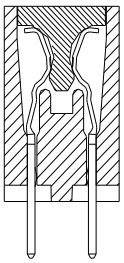

BETWEEN CONTACT
POLARIZING KEY

P/N 306-240-318

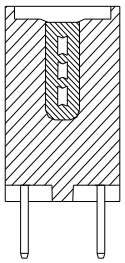

Компания «ЭлектроПласт» предлагает заключение долгосрочных отношений при поставках импортных электронных компонентов на взаимовыгодных условиях!

Наши преимущества:

- Оперативные поставки широкого спектра электронных компонентов отечественного и импортного производства напрямую от производителей и с крупнейших мировых складов;
- Поставка более 17-ти миллионов наименований электронных компонентов;
- Поставка сложных, дефицитных, либо снятых с производства позиций;
- Оперативные сроки поставки под заказ (от 5 рабочих дней);
- Экспресс доставка в любую точку России;
- Техническая поддержка проекта, помощь в подборе аналогов, поставка прототипов;
- Система менеджмента качества сертифицирована по Международному стандарту ISO 9001;
- Лицензия ФСБ на осуществление работ с использованием сведений, составляющих государственную тайну;
- Поставка специализированных компонентов (Xilinx, Altera, Analog Devices, Intersil, Interpoint, Microsemi, Aeroflex, Peregrine, Syfer, Eurofarad, Texas Instrument, Miteq, Cobham, E2V, MA-COM, Hittite, Mini-Circuits,General Dynamics и др.);

Помимо этого, одним из направлений компании «ЭлектроПласт» является направление «Источники питания». Мы предлагаем Вам помощь Конструкторского отдела:

- Подбор оптимального решения, техническое обоснование при выборе компонента;
- Подбор аналогов;
- Консультации по применению компонента;
- Поставка образцов и прототипов;
- Техническая поддержка проекта;
- Защита от снятия компонента с производства.

Как с нами связаться

Телефон: 8 (812) 309 58 32 (многоканальный)
Факс: 8 (812) 320-02-42
Электронная почта: org@eplast1.ru
Адрес: 198099, г. Санкт-Петербург, ул. Калинина, дом 2, корпус 4, литера А.