RFMD + TriQuint = Qorvo

RFSW8009

11a/b/g/n/ac Wi-Fi SPDT SWITCH
0.5 to 6.0GHz

The RFSW8009 is a high power single-pole double-throw (SPDT) switch designed for high performance wireless applications. This wideband switch has been designed for use from 0.5 to 6GHz, where high linearity, high isolation, low insertion loss, and small package size are required. Switching for the RFSW8009 is controlled via two control voltage inputs. The RFSW8009 is manufactured in a pHEMT GaAs process and packaged in a 6-pin, 1.5 x 1.86mm Laminate package.

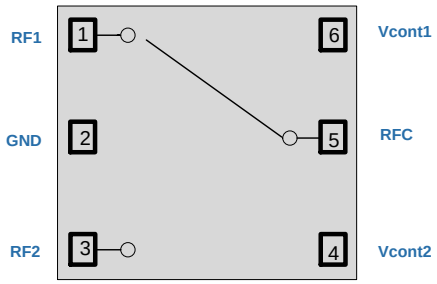

Functional Block Diagram (Top View)

Package: Laminate 6-pin
1.5mm x 1.86mm x 0.59mm

Features

- Control Voltage: 2.7V to 5.3V
- Insertion Loss:
  - 0.45dB @ 2.5GHz
  - 0.65dB @ 6.0GHz.
- Isolation:
  - 28dB @ 2.5GHz
  - 26dB @ 6.0GHz
- Input P0.1dB:
  - 32dBm @ 2.0-6.0GHz, 3V

Applications

- IEEE 802.11 Wi-Fi Systems
- IEEE 802.15.4 ZigBee Systems
- Customer Premise Equipment (CPE)
- Wireless Access Points, Gateways and Router Applications
- ISM Band Transmitter Applications

Ordering Information

RFSW8009SB	Standard 5 piece bag
RFSW8009SQ	Standard 25 piece bag
RFSW8009SR	Standard 100 piece reel
RFSW8009TR7	Standard 2500 piece reel
RFSW8009PCK-410	Evaluation board sample 0.5 – 2.5GHz
RFSW8009PCK-411	Evaluation board sample 2.5 – 6GHz

© 2015 RF Micro Devices, Inc.

RFMD + TriQuint = Qorvo

Absolute Maximum Ratings

Parameter	Rating	Unit
Control Voltage	6.0	V
Operating Ambient Temperature	-45 to +85	ºC
Storage Temperature	-55 to +150	ºC
Input RF Power (VCTL High = 3.0V)	+34	dBm
Input RF Power (VCTL High = 5.0V)	+35	dBm

Caution! ESD sensitive device.

RFMD Green: RoHS status based on EU Directive 2011/65/EU (at time of this document revision), halogen free per IEC 61249-2-21, < 1000ppm each of antimony trioxide in polymeric materials and red phosphorus as a flame retardant, and <2% antimony in solder.

Exceeding any one or a combination of the Absolute Maximum Rating conditions may cause permanent damage to the device. Extended application of Absolute Maximum Rating conditions to the device may reduce device reliability. Specified typical performance or functional operation of the device under Absolute Maximum Rating conditions is not implied.

Electrical Characteristics

Parameter	Specification			Unit	Condition
	Min	Typ	Max		
Operating Parameters					**Vcont High = 3.0V; Vcont Low = 0V; Temp = 25ºC; Unless noted otherwise.**
Frequency	0.5		6.0	GHz	
Switch Control Voltage: High	2.7	3.0	5.3	V	
Switch Control Voltage: Low	-0.2	0	0.20	V	
Insertion Loss	-	0.40	0.65	dB	0.5 to 2.0GHz; DC blocking capacitors = 56pF
	-	0.45	0.70	dB	2.0 to 2.5GHz; DC blocking capacitors = 56pF
	-	0.55	0.80	dB	2.5 to 3.8GHz; DC blocking capacitors = 8pF
	-	0.65	0.90	dB	3.8 to 6.0GHz; DC blocking capacitors = 8pF
Isolation	25	28	-	dB	0.5 to 2.0GHz; DC blocking capacitors = 56pF
	25	28	-	dB	2.0 to 2.5GHz; DC blocking capacitors = 56pF
	25	28	-	dB	2.5 to 3.8GHz; DC blocking capacitors = 8pF
	22	26	-	dB	3.8 to 6.0GHz; DC blocking capacitors = 8pF
Return Loss	15	20	-	dB	0.5 to 2.0GHz; DC blocking capacitors = 56pF
	15	20	-	dB	2.0 to 2.5GHz; DC blocking capacitors = 56pF
	10	15	-	dB	2.5 to 6.0GHz; DC blocking capacitors = 8pF
Input P0.1dB	-	+32	-	dBm	0.5 to 2.5GHz; DC blocking capacitors = 56pF
	-	+32	-	dBm	2.5 to 6.0GHz; DC blocking capacitors = 8pF
	-	+35	-	dBm	0.5 to 6.0GHz; Vcont high = 5V.
Input P1dB	-	+34	-	dBm	0.5 to 2.5GHz; DC blocking capacitors = 56pF
	-	+34	-	dBm	2.5 to 6.0GHz; DC blocking capacitors = 8pF
Input IP3	-	+60	-	dBm	Freq=2.5GHz; Input Power = +20dBm
2nd Harmonic	-	80	-	dBc	Freq=2.5GHz; Input Power = +20dBm
3rd Harmonic	-	80	-	dBc	Freq=2.5GHz; Input Power = +20dBm
Switch Control Current; High	-	0.1	10	µA	No RF input ; All Modes

© 2015 RF Micro Devices, Inc.

Parameter	Specification			Unit	Condition
	Min	Typ	Max		
Switch Control Speed	-	50	250	ns	50% of control to 90/10% of RF; All Modes

Logic Control Table

Mode	Vcont1	Vcont2
RF1 – RFC	1	0
RF2 – RFC	0	1

Application Schematic

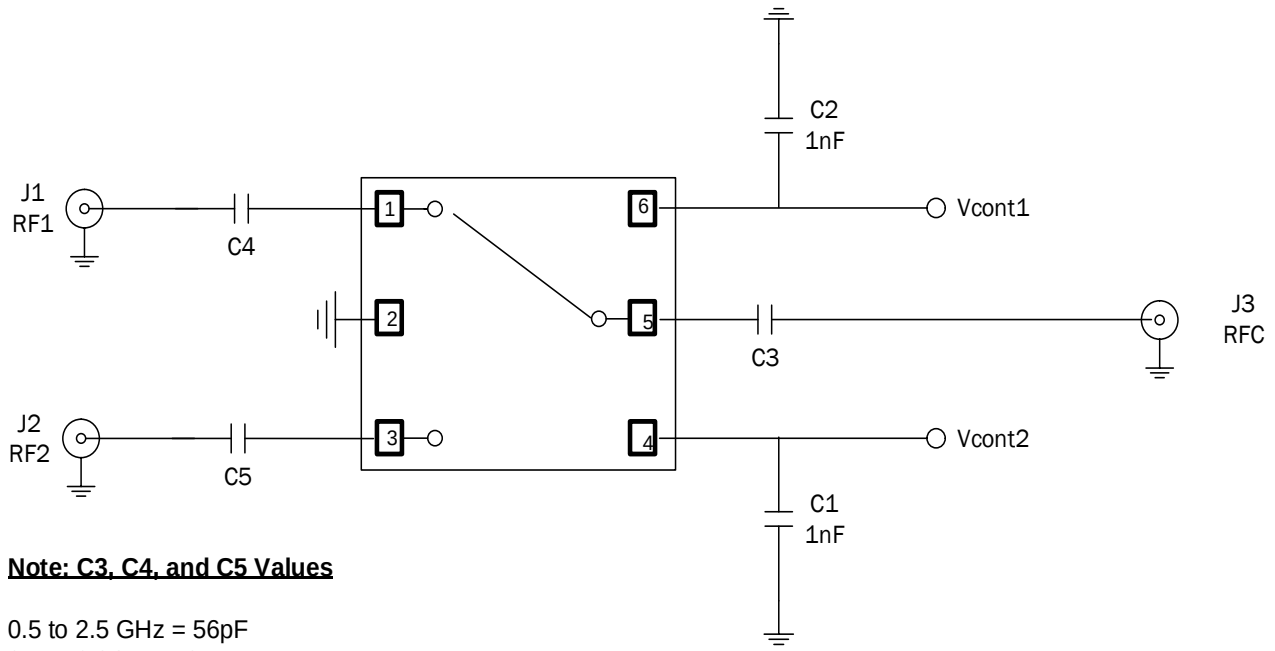

Note: C3, C4, and C5 Values

0.5 to 2.5 GHz = 56pF
2.5 to 6.0GHz = 8pF

Capacitor values are based on Qorvo evaluation board. Final values for a system board will depend on PCB characteristics, parasitics, waveform and switching speed requirements

© 2015 RF Micro Devices, Inc.

Pin Out

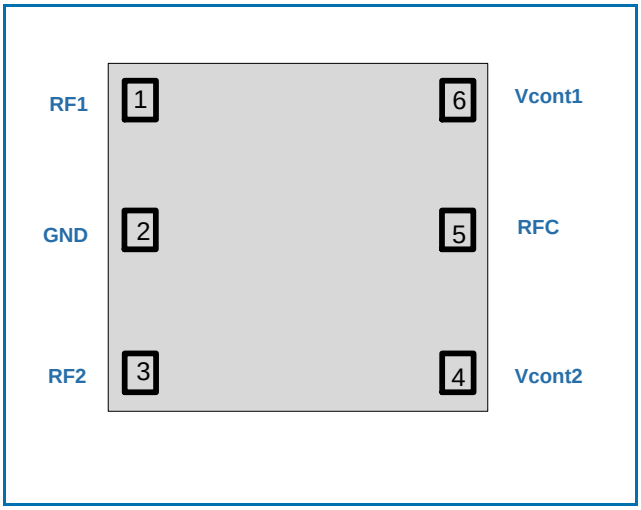

Pin Description Table

Pin	Name	Description
1	RF1	RF Port-1. External DC blocking required.
2	GND	Ground.
3	RF2	RF Port-2. External DC blocking required.
4	Vcont2	Control voltage to enable RF2 port (RF2-RFC).
5	RFC	Common RF Port. External DC blocking required.
6	Vcont1	Control voltage to enable RF1 port (RF1-RFC).

© 2015 RF Micro Devices, Inc.

Typical Performance Plots (T=25C; Vcont High = 3V; Vcont Low = 0V; unless noted otherwise)

Insertion Loss vs. Frequency: RFC-RF1/RF2

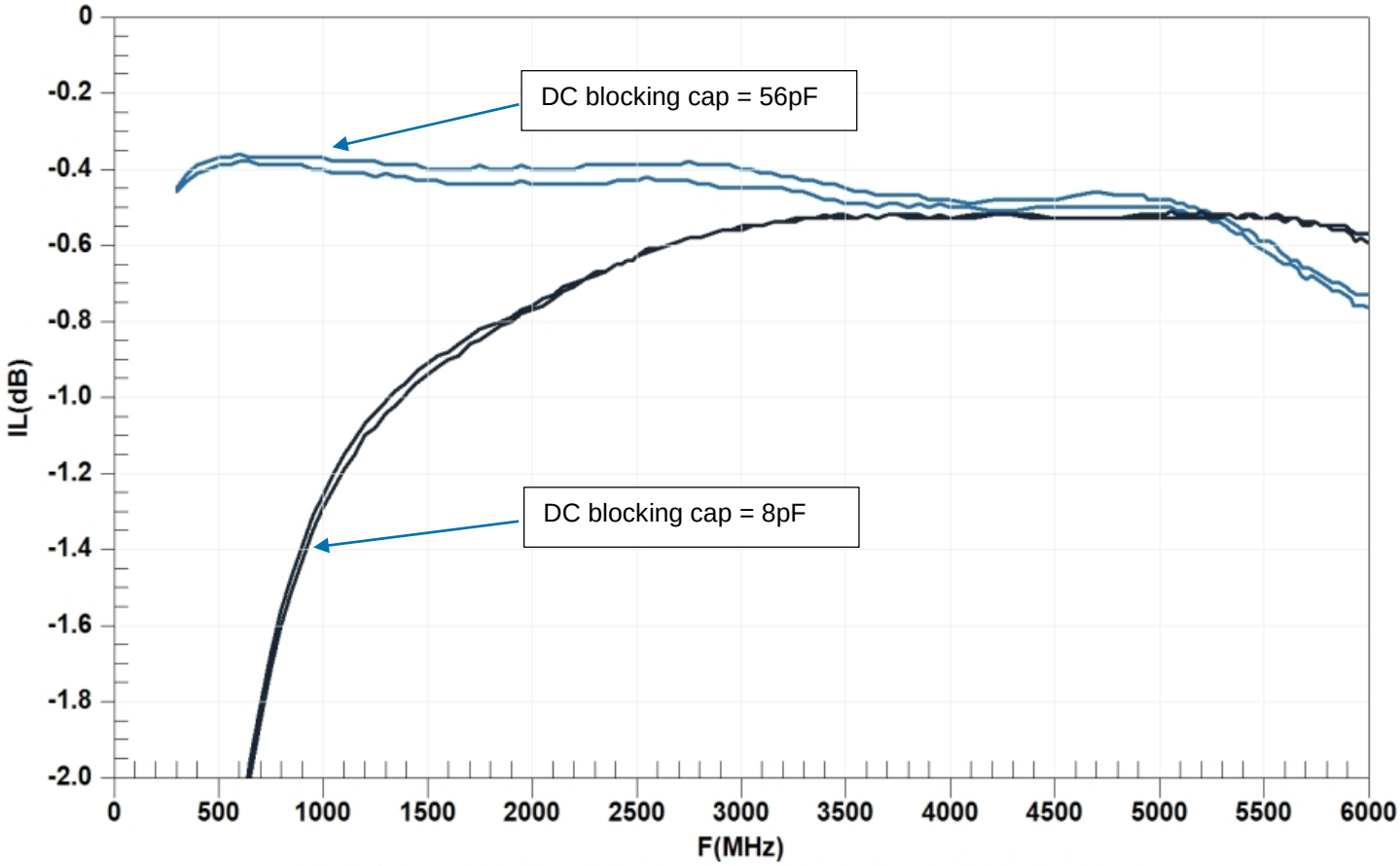

© 2015 RF Micro Devices, Inc.

Isolation vs. Frequency: RFC-RF1/RF2

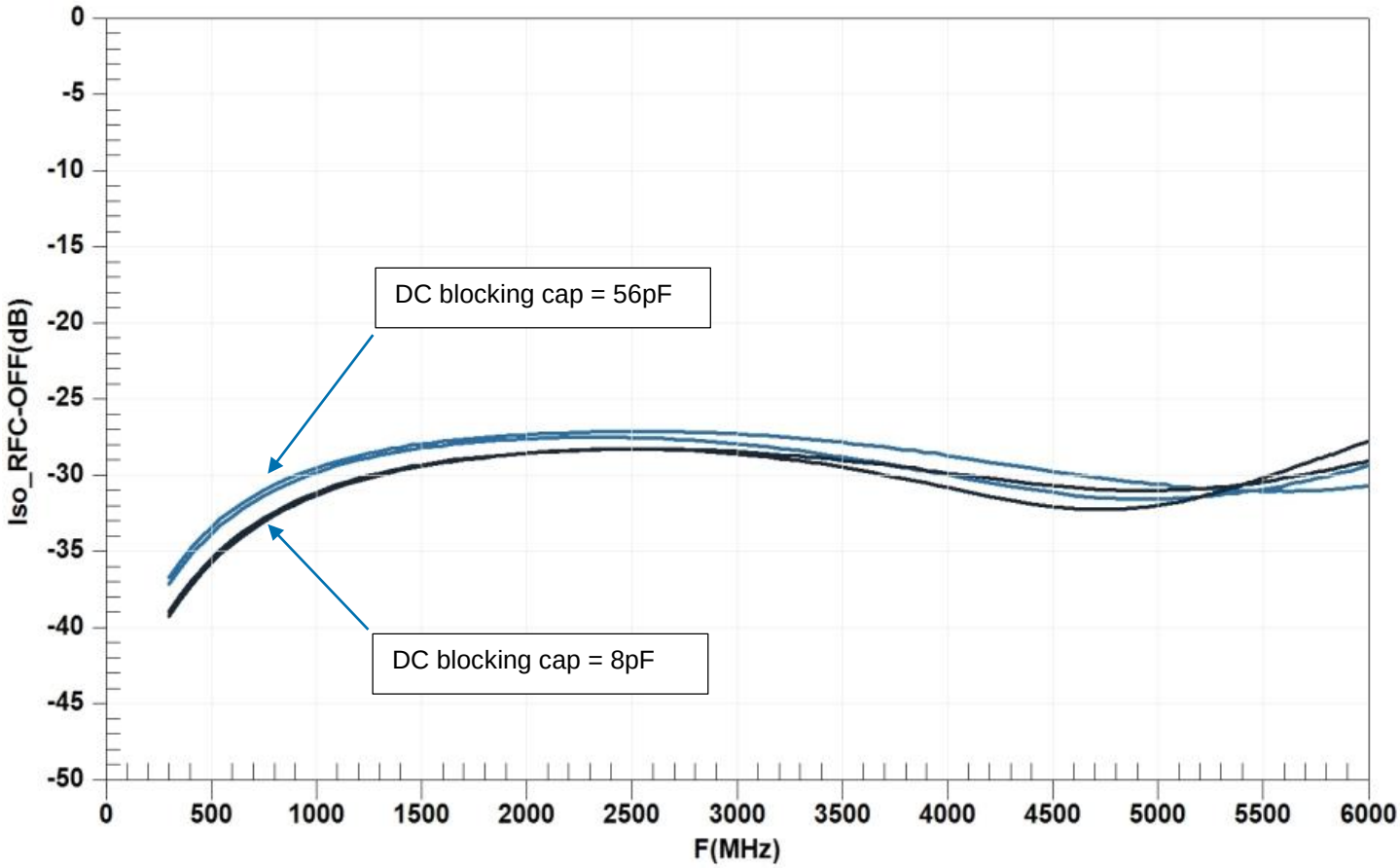

© 2015 RF Micro Devices, Inc.

RFC return Loss vs. Frequency

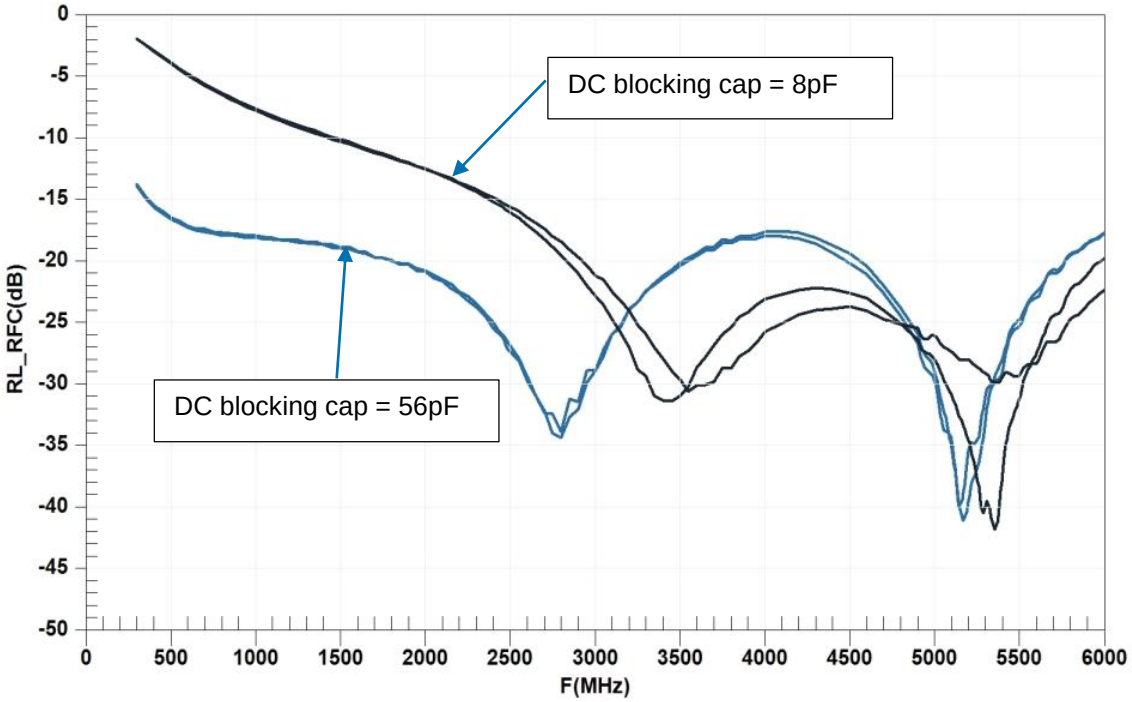

RF1/RF2 return Loss vs. Frequency

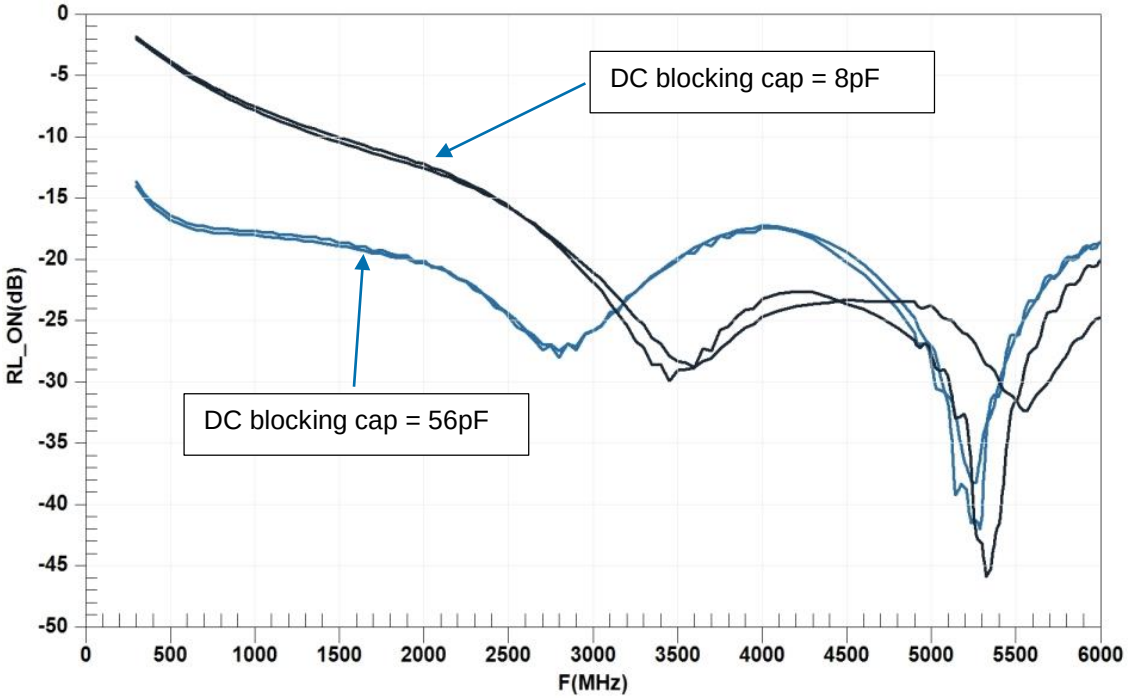

© 2015 RF Micro Devices, Inc.

Package Outline Drawing (dimensions in mm)

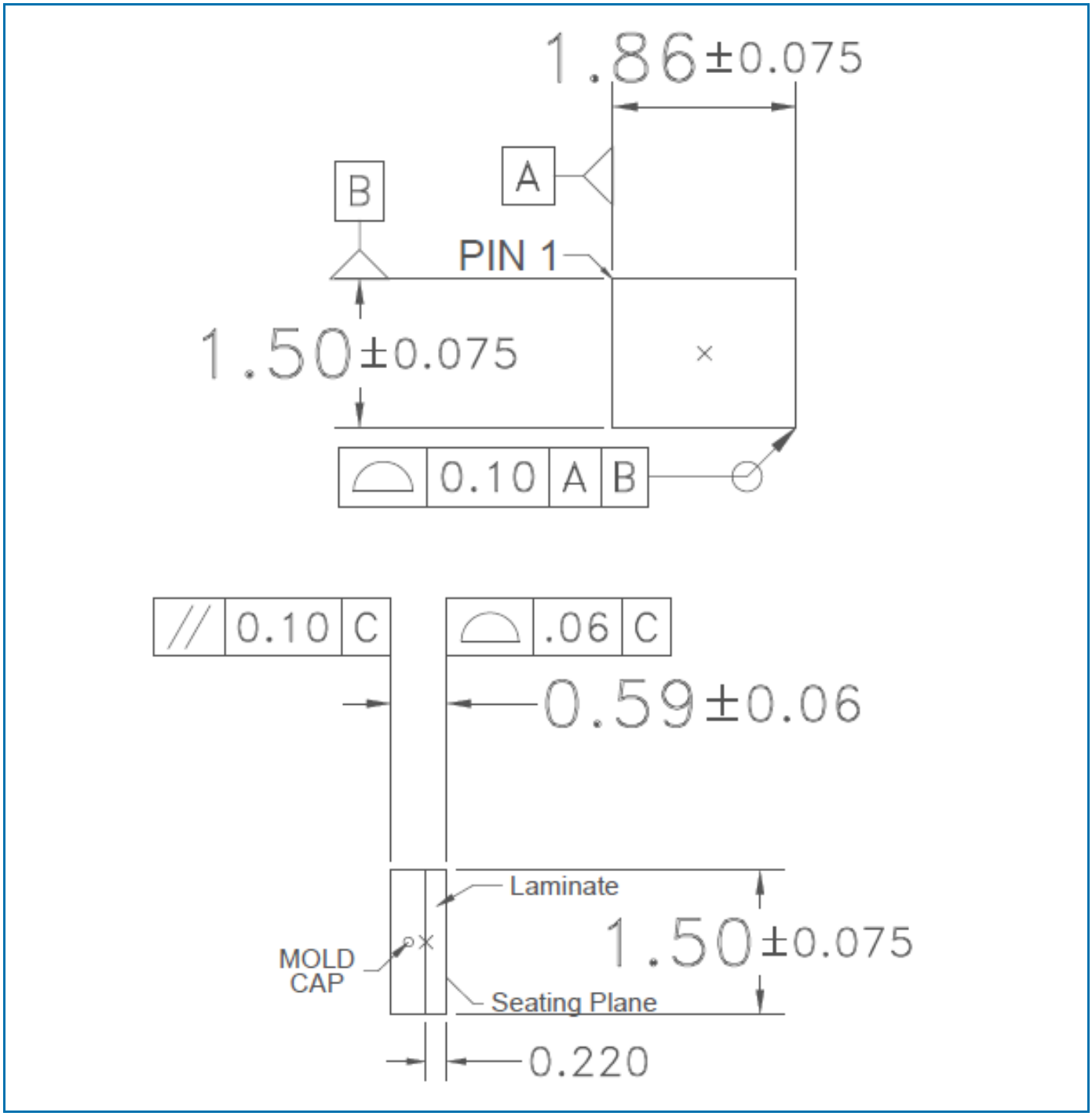

© 2015 RF Micro Devices, Inc.
Disclaimer: Subject to change without notice
www.rfmd.com / www.qorvo.com

Package Outline Drawing …continue (dimensions in mm)

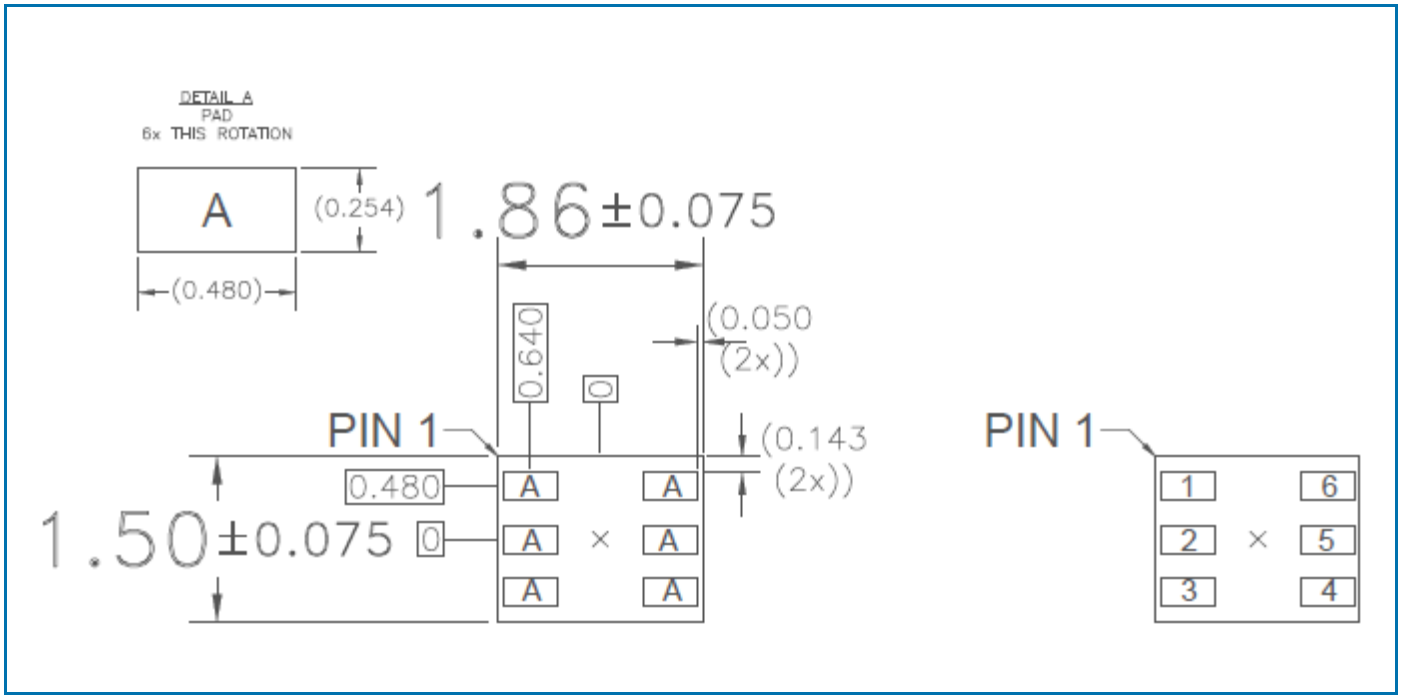

© 2015 RF Micro Devices, Inc.

Recommended Land Pattern (dimensions in mm)

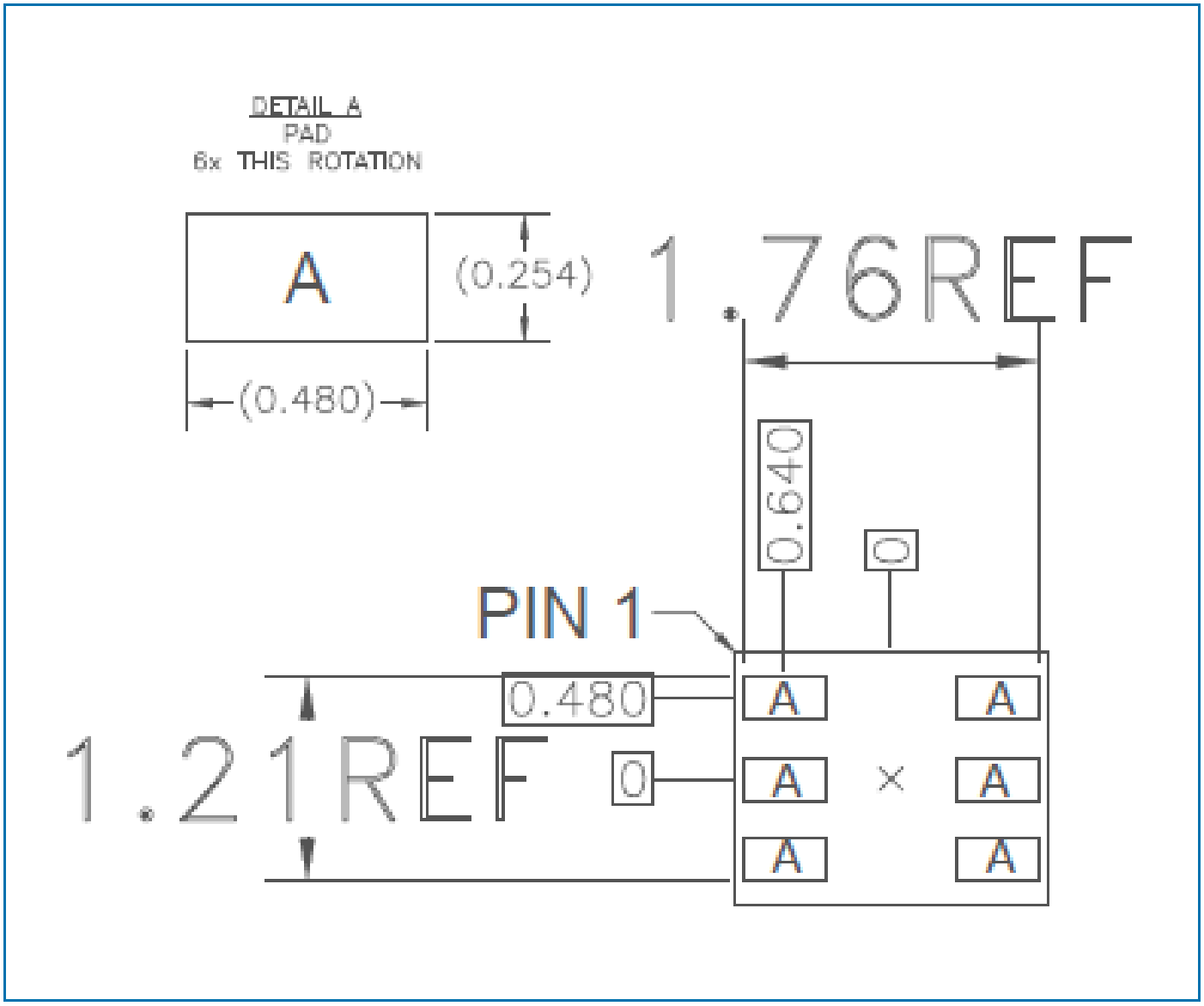

© 2015 RF Micro Devices, Inc.

Recommended Solder Mask Pattern (dimensions in mm)

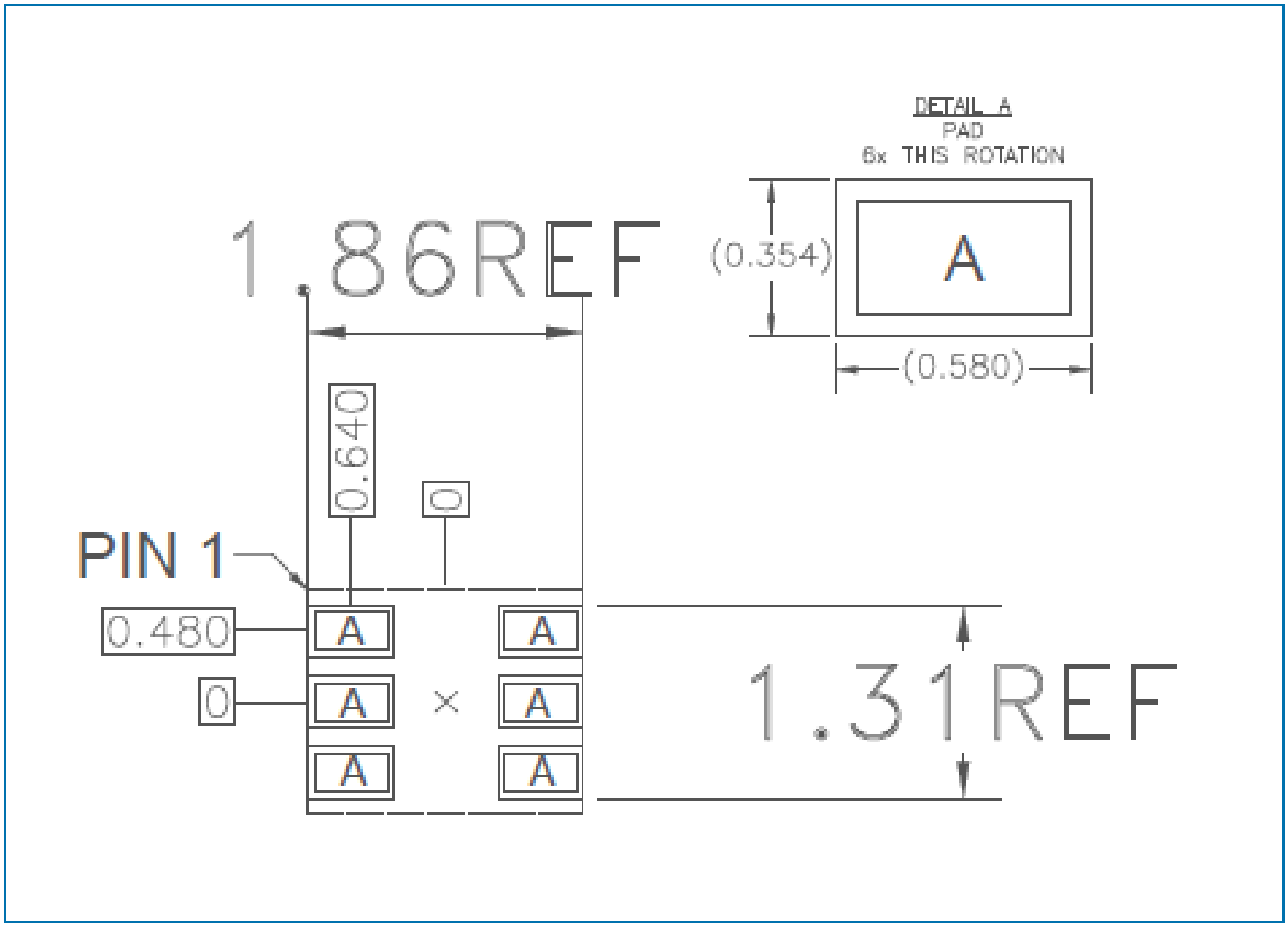

© 2015 RF Micro Devices, Inc.

Компания «ЭлектроПласт» предлагает заключение долгосрочных отношений при поставках импортных электронных компонентов на взаимовыгодных условиях!

Наши преимущества:

- Оперативные поставки широкого спектра электронных компонентов отечественного и импортного производства напрямую от производителей и с крупнейших мировых складов;
- Поставка более 17-ти миллионов наименований электронных компонентов;
- Поставка сложных, дефицитных, либо снятых с производства позиций;
- Оперативные сроки поставки под заказ (от 5 рабочих дней);
- Экспресс доставка в любую точку России;
- Техническая поддержка проекта, помощь в подборе аналогов, поставка прототипов;
- Система менеджмента качества сертифицирована по Международному стандарту ISO 9001;
- Лицензия ФСБ на осуществление работ с использованием сведений, составляющих государственную тайну;
- Поставка специализированных компонентов (Xilinx, Altera, Analog Devices, Intersil, Interpoint, Microsemi, Aeroflex, Peregrine, Syfer, Eurofarad, Texas Instrument, Miteq, Cobham, E2V, MA-COM, Hittite, Mini-Circuits,General Dynamics и др.);

Помимо этого, одним из направлений компании «ЭлектроПласт» является направление «Источники питания». Мы предлагаем Вам помощь Конструкторского отдела:

- Подбор оптимального решения, техническое обоснование при выборе компонента;
- Подбор аналогов;
- Консультации по применению компонента;
- Поставка образцов и прототипов;
- Техническая поддержка проекта;
- Защита от снятия компонента с производства.

Как с нами связаться

Телефон: 8 (812) 309 58 32 (многоканальный)
Факс: 8 (812) 320-02-42
Электронная почта: org@eplast1.ru
Адрес: 198099, г. Санкт-Петербург, ул. Калинина, дом 2, корпус 4, литера А.