Agilent HCPL-5150 & HCPL-5151 DSCC SMD 5962-04205 0.5 Amp Output Current IGBT Gate Drive Optocoupler

Data Sheet

Description

The HCPL-5150 contains a GaAsP LED optically coupled to an integrated circuit with a power output stage. The device is ideally suited for driving power IGBTs and MOSFETs used in motor control inverter applications. The high operating voltage range of the output stage provides the drive voltages required by gate controlled devices. The voltage and current supplied by this optocoupler makes it ideally suited for directly driving IGBTs with ratings up to 1200 V/50 A. For IGBTs with higher ratings, the HCPL-5150 can be used to drive a discrete power stage, which drives the IGBT gate.

The products are capable of operation and storage over the full military temperature range and can be purchased as either commercial product, with full MIL-PRF-38534 Class H testing, or from Defense Supply Center Columbus (DSCC) Standard Microcircuit Drawing (SMD) 5962-04205. All devices are manufactured and tested on a MIL-PRF-38534 certified line and are included in the DSCC Qualified Manufacturers List, QML-38534 for Hybrid Microcircuits.

Schematic Diagram

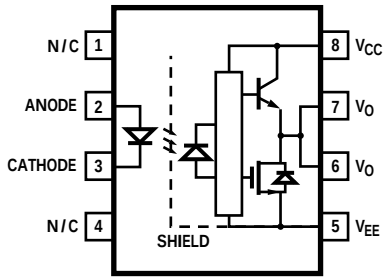

Applications

- **Industrial and Military Environments**
- **High Reliability Systems**
- **Harsh Industrial Environments**
- **Transportation, Medical, and Life Critical Systems**
- **Isolated IGBT/MOSFET Gate Drive**
- **AC and Brushless DC Motor Drives**
- **Industrial Inverters**
- **Switch Mode Power Supplies (SMPS)**
- **Uninterruptible Power Supplies (UPS)**

Features

- **Performance Guaranteed over Full Military Temperature Range: -55°C to +125°C**
- **Manufactured and Tested on a MIL-PRF-38534 Certified Line**
- **Hermetically Sealed Packages**
- **Dual Marked with Device Part Number and DSCC Drawing Number**
- **QML-38534**
- **HCPL-3150 Function Compatibility**
- **0.5 A Minimum Peak Output Current**
- **10 kV/µs Minimum Common Mode Rejection (CMR) at V_{CM} = 1000 V**
- **1.0 V Maximum Low Level Output Voltage (V_{OL})** Eliminates Need for Negative Gate Drive
- **I_{CC} = 5 mA Maximum Supply Current**
- **Under Voltage Lock-Out Protection (UVLO) with Hysteresis**
- **Wide Operating V_{CC} Range: 15 to 30 Volts**
- **500 ns Maximum Propagation Delay**
- **+/- 0.35 µs Maximum Delay Between Devices**

CAUTION: It is advised that normal static precautions be taken in handling and assembly of this component to prevent damage and/or degradation which may be induced by ESD.

Agilent Technologies

Truth Table

LED	$V_{CC} - V_{EE}$ "POSITIVE GOING" (i.e., TURN-ON)	$V_{CC} - V_{EE}$ "NEGATIVE GOING" (i.e., TURN-OFF)	V_O
OFF	0 – 30 V	0 – 30 V	LOW
ON	0 – 11 V	0 – 9.5 V	LOW
ON	11 – 13.5 V	9.5 – 12 V	TRANSITION
ON	13.5 – 30 V	12 – 30 V	HIGH

A 0.1 μF bypass capacitor must be connected between pins 5 and 8.

Selection Guide – Package Styles and Lead Configuration Options

Agilent Part Number and Options	
Commercial	HCPL-5150
MIL-PRF-38534, Class H	HCPL-5151
Standard Lead Finish	Gold Plate
Solder Dipped	Option –200
Butt Cut/Gold Plate	Option –100
Gull Wing/Soldered	Option –300

Device Marking

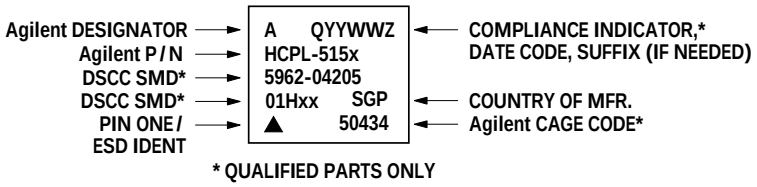

SMD Part Number

Prescript for all below	*5962-*
Either Gold or Solder	0420501HPX
Gold Plate	0420501HPC
Solder Dipped	0420501HPA
Butt Cut/Gold Plate	0420501HYC
Butt Cut/Soldered	0420501HYA
Gull Wing/Soldered	0420501HXA

Outline Drawing

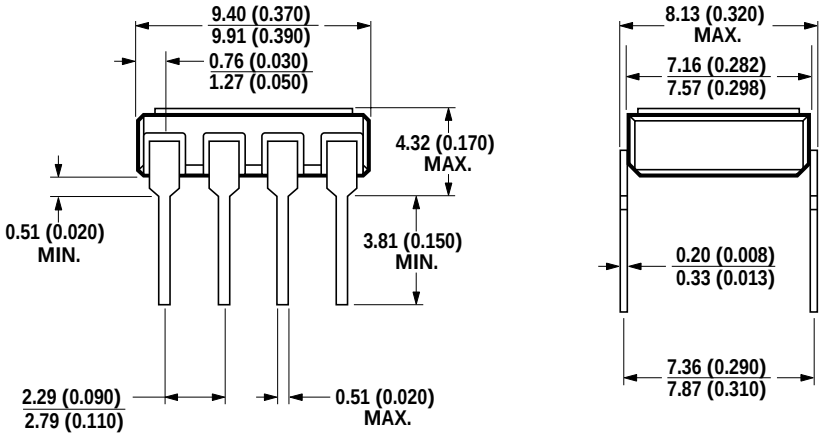

NOTE: DIMENSIONS IN MILLIMETERS (INCHES).

Hermetic Optocoupler Options

Option	Description
100	Surface mountable hermetic optocoupler with leads trimmed for butt joint assembly. This option is available on commercial and hi-rel product (see drawings below for details).
200	Lead finish is solder dipped rather than gold plated. This option is available on commercial and hi-rel product. DSCC Drawing part numbers contain provisions for lead finish.
300	Surface mountable hermetic optocoupler with leads cut and bent for gull wing assembly. This option is available on commercial and hi-rel product (see drawings below for details). This option has solder dipped leads.

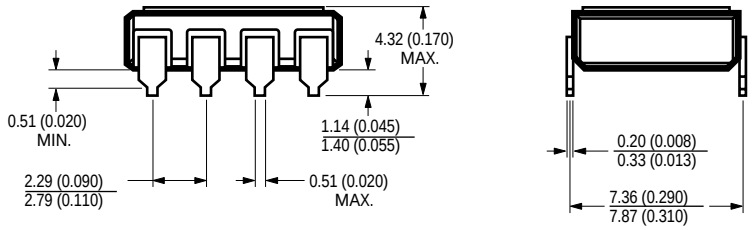

NOTE: DIMENSIONS IN MILLIMETERS (INCHES).

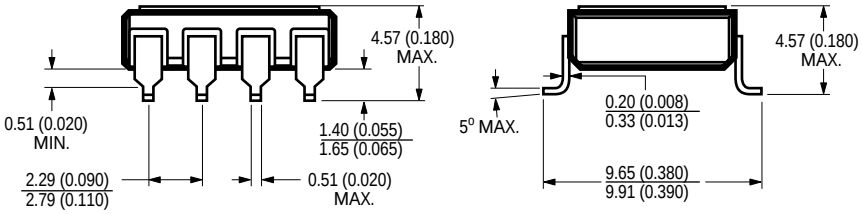

NOTE: DIMENSIONS IN MILLIMETERS (INCHES).

Absolute Maximum Ratings

Parameter	Symbol	Min.	Max.	Units	Note
Storage Temperature	T_S	-65	+150	°C	
Operating Temperature	T_A	-55	+125	°C	
Case Temperature	T_C		+145	°C	
Junction Temperature	T_J		+150	°C	
Lead Solder Temperature			260 for 10s	°C	
Average Input Current	$I_{F\ AVG}$		25	mA	1
Peak Transient Input Current (<1 µs pulse width, 300 pps)	$I_{F\ PK}$		1.0	A	
Reverse Input Voltage	V_R		5	V	
“High” Peak Output Current	$I_{OH\ (PEAK)}$		0.6	A	2
“Low” Peak Output Current	$I_{OL\ (PEAK)}$		0.6	A	2
Supply Voltage	$(V_{CC}-V_{EE})$	0	35	V	
Output Voltage	$V_{O\ (PEAK)}$	0	V_{CC}	V	
Input Power Dissipation	P_E		45	mW	1
Output Power Dissipation	P_O		250	mW	3
Total Power Dissipation	P_T		295	mW	4

Notes:

1. No derating required with the typical case-to-ambient thermal resistance. (θ_{CA}=140°C/W) Refer to Figure 35.
2. Maximum pulse width = 10 µs, maximum duty cycle = 0.2%. This value is intended to allow for component tolerances for designs with I_O peak minimum = 0.5 A. See Applications section for additional details on limiting I_{OH} peak.
3. Derate linearly above 102°C free air temperature at a rate of 6mW/°C with the typical case-to-ambient thermal resistance (θ_{CA}=140°C/W). Refer to Figure 36.
4. Derate linearly above 102°C free air temperature at a rate of 6mW/°C with the typical case-to-ambient thermal resistance (θ_{CA}=140°C/W). Refer to Figure 35 and 36.

ESD Classification

MIL-STD-883, Method 3015 (▲), Class 1

Recommended Operating Conditions

Parameter	Symbol	Min.	Max.	Units
Power Supply Voltage	$(V_{CC} – V_{EE})$	15	30	Volts
Input Current (ON)	$I_{F\ (ON)}$	10	18	mA
Input Voltage (OFF)	$V_{F\ (OFF)}$	-3.0	0.8	Volts
Operating Temperature	T_A	-55	125	°C

Electrical Specifications (DC)

Over recommended operating conditions (T_A = -55 to +125°C, $I_{F(ON)}$ = 10 to 18 mA, $V_{F(OFF)}$ = -3.0 to 0.8V, V_{CC} = 15 to 30 V, V_{EE} = Ground) unless otherwise specified.

Parameter	Symbol	Test Conditions	Group A Subgroups (13)	Limits			Units	Fig.	Note
				Min.	Typ.*	Max.			
High Level Output Current	I_{OH}	$V_O = (V_{CC} - 4\ V)$	1, 2, 3	0.1	0.4		A	2, 3, 17	2
		$V_O = (V_{CC} - 15\ V)$		0.5					1
Low Level Output Current	I_{OL}	$V_O = (V_{EE} + 2.5\ V)$	1, 2, 3	0.1	0.6		A	5, 6, 18	2
		$V_O = (V_{EE} + 15\ V)$		0.5					1
High Level Output Voltage	V_{OH}	I_O = -100 mA	1, 2, 3	$(V_{CC} - 4)$	$(V_{CC} - 3)$		V	1, 3, 19	3, 4
Low Level Output Voltage	V_{OL}	I_O = 100 mA	1, 2, 3		0.4	1.0	V	4, 6, 20	
High Level Supply Current	I_{CCH}	Output Open, I_F = 10 to 18 mA	1, 2, 3		2.5	5.0	mA	7, 8	
Low Level Supply Current	I_{CCL}	Output Open, V_F = -3.0 to +0.8V	1, 2, 3		2.7	5.0	mA		
Threshold Input Current Low to High	I_{FLH}	I_O = 0 mA, V_O > 5 V	1, 2, 3		2.6	9.0	mA	9, 15, 21	
Threshold Input Voltage High to Low	V_{FHL}		1, 2, 3	0.8			V		
Input Forward Voltage	V_F	I_F = 10 mA	1, 2, 3	1.2	1.5	1.8	V	16	
Temperature Coefficient of Forward Voltage	$\Delta V_F/\Delta T_A$	I_F = 10 mA			-1.6		mV/°C		
Input Reverse Breakdown Voltage	BV_R	I_R = 10 µA	1, 2, 3	5			V		
Input Capacitance	C_{IN}	f = 1 MHz, V_F = 0 V			80		pF		
UVLO Threshold	V_{UVLO+}	V_O > 5 V, I_F = 10 mA	1, 2, 3	11.0	12.3	13.5	V	22, 37	
	V_{UVLO-}		1, 2, 3	9.5	10.7	12.0			
UVLO Hysteresis	$UVLO_{HYS}$				1.6				

*All typical values at T_A = 25°C and $V_{CC} - V_{EE}$ = 30 V, unless otherwise noted.

Switching Specifications (AC)

Over recommended operating conditions (T_A = -55 to +125°C, $I_{F(ON)}$ = 10 to 18 mA, $V_{F(OFF)}$ = -3.0 to 0.8V, V_{CC} = 15 to 30 V, V_{EE} = Ground) unless otherwise specified.

Parameter	Symbol	Test Conditions	Group A Subgroups (13)	Limits			Units	Fig.	Note
				Min.	Typ.*	Max.			
Propagation Delay Time to High Output Level	t_{PLH}	R_g = 47 Ω, C_g = 3 nF, f = 10 kHz, Duty Cycle = 50%	9, 10, 11	0.10	0.30	0.50	µs	10, 11, 12, 13, 14, 23	11
Propagation Delay Time to Low Output Level	t_{PHL}		9, 10, 11	0.10	0.30	0.50	µs		
Pulse Width Distortion	PWD		9, 10, 11			0.3	µs		12
Propagation Delay Difference Between Any Two Parts	PDD ($t_{PHL} - t_{PLH}$)		9, 10, 11	-0.35		0.35	µs	33, 34	7
Rise Time	t_r				0.1		µs	23	
Fall Time	t_f				0.1		µs		
UVLO Turn On Delay	$t_{UVLO\ ON}$	V_O > 5 V, I_F = 10 mA			0.8		µs	22	
UVLO Turn Off Delay	$t_{UVLO\ OFF}$	V_O < 5 V, I_F = 10 mA			0.6				
Output High Level Common Mode Transient Immunity	$\|CM_H\|$	I_F = 10 mA, V_{CC} = 30 V V_{CM} = 1000V T_A = 25°C	9	10			kV/µs	24	8, 9, 14
Output Low Level Common Mode Transient Immunity	$\|CM_L\|$	V_{CM} = 1000V V_F = 0 V, V_{CC} = 30 V T_A = 25°C	9	10			kV/µs		8, 10, 14

*All typical values at T_A = 25°C and $V_{CC} - V_{EE}$ = 30 V, unless otherwise noted.

Package Characteristics

Over recommended operating conditions (T_A = -55 to +125°C) unless otherwise specified.

Parameter	Symbol	Test Conditions	Group A Subgroups (13)	Limits			Units	Fig.	Note
				Min.	Typ.*	Max.			
Input-Output Leakage Current	I_{I-O}	V_{I-O} = 1500Vdc RH = 45%, t = 5 sec., T_A = 25°C	1			1.0	µA		5, 6
Resistance (Input-Output)	R_{I-O}	V_{I-O} = 500 V_{DC}			10^{10}		Ω		6
Capacitance (Input-Output)	C_{I-O}	f = 1 MHz			2.34		pF		6

*All typicals at T_A = 25°C.

Notes:

1. Maximum pulse width = 10 µs, maximum duty cycle = 0.2%. This value is intended to allow for component tolerances for designs with I_O peak minimum = 0.5 A. See Applications section for additional details on limiting I_{OH} peak.
2. Maximum pulse width = 50 µs, maximum duty cycle = 0.5%.
3. In this test V_{OH} is measured with a dc load current. When driving capacitive loads V_{OH} will approach V_{CC} as I_{OH} approaches zero amps.
4. Maximum pulse width = 1 ms, maximum duty cycle = 20%.
5. This is a momentary withstand test, not an operating condition.
6. Device considered a two-terminal device: pins on input side shorted together and pins on output side shorted together.
7. The difference between t_{PHL} and t_{PLH} between any two HCPL-5150 parts under the same test condition.
8. Pins 1 and 4 need to be connected to LED common.
9. Common mode transient immunity in the high state is the maximum tolerable $|dV_{CM}/dt|$ of the common mode pulse, V_{CM}, to assure that the output will remain in the high state (i.e., V_O > 15.0 V).
10. Common mode transient immunity in a low state is the maximum tolerable $|dV_{CM}/dt|$ of the common mode pulse, V_{CM}, to assure that the output will remain in a low state (i.e., V_O < 1.0 V).
11. This load condition approximates the gate load of a 1200 V/25 A IGBT.
12. Pulse Width Distortion (PWD) is defined as $|t_{PHL}-t_{PLH}|$ for any given device.
13. Standard parts receive 100% testing at 25°C (Subgroups 1 and 9). SMD and Class H parts receive 100% testing at 25, 125 and -55°C (Subgroups 1 and 9, 2 and 10, 3 and 11, respectively).
14. Parameters are tested as part of device initial characterization and after design and process changes. Parameters are guaranteed to limits specified for all lots not specifically tested.

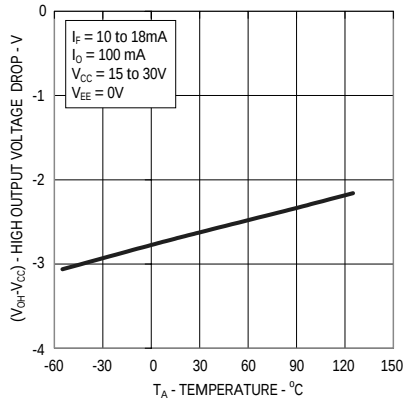

Figure 1. V_{OH} vs. Temperature

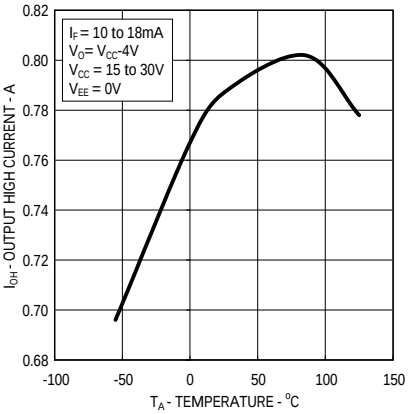

Figure 2. I_{OH} vs. Temperature

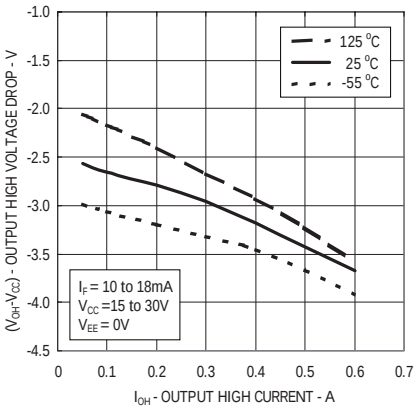

Figure 3. V_{OH} vs. I_{OH}

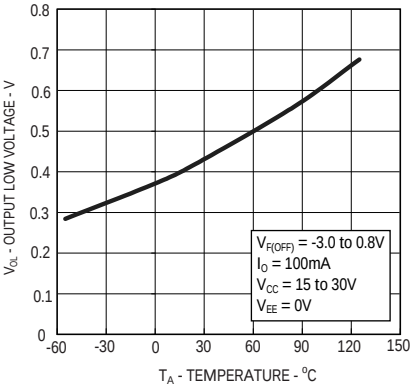

Figure 4. V_{OL} vs. Temperature

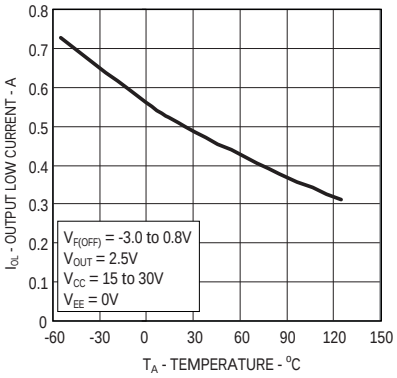

Figure 5. I_{OL} vs. Temperature

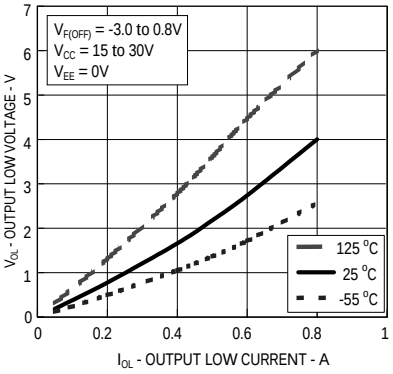

Figure 6. V_{OL} vs. I_{OL}

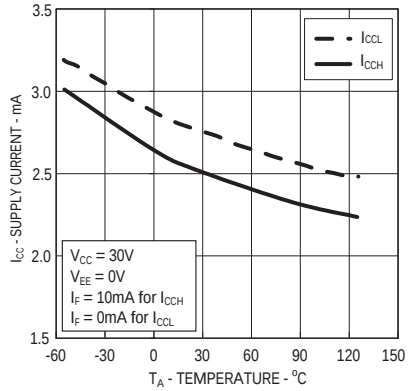

Figure 7. I_{CC} vs. Temperature

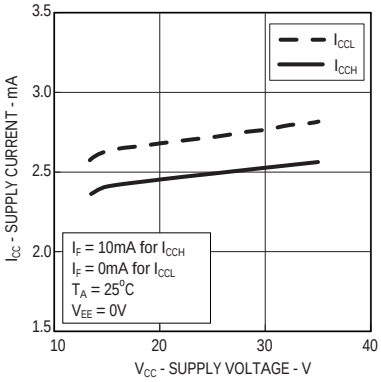

Figure 8. I_{CC} vs. V_{CC}

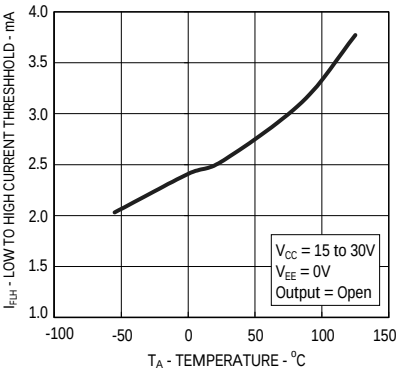

Figure 9. I_{FLH} vs. Temperature

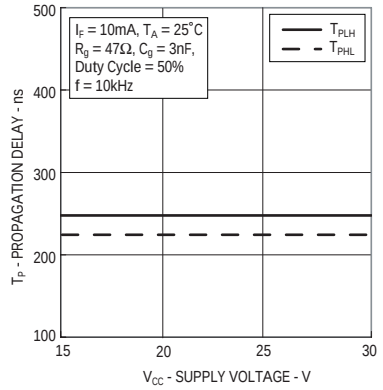

Figure 10. Propagation Delay vs. V_{CC}

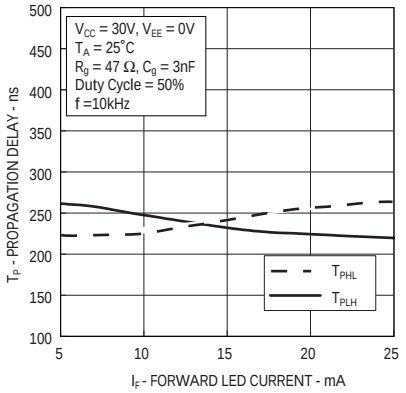

Figure 11. Propagation Delay vs. I_F

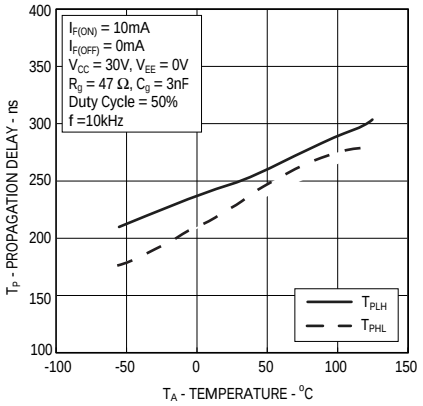

Figure 12. Propagation Delay vs. Temperature

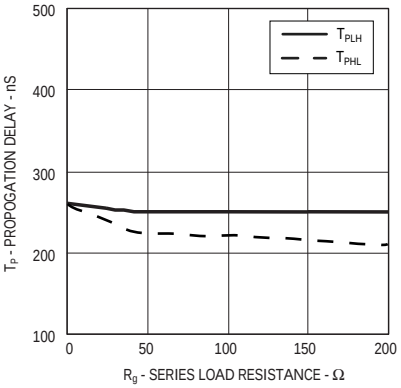

Figure 13. Propagation Delay vs. R_g

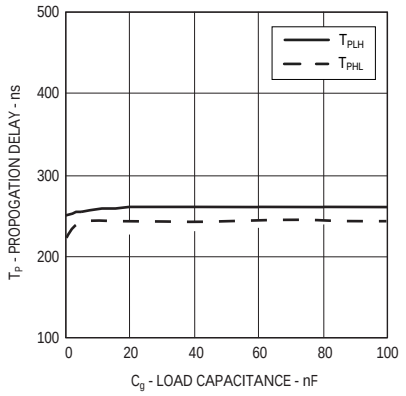

Figure 14. Propagation Delay vs. C_g

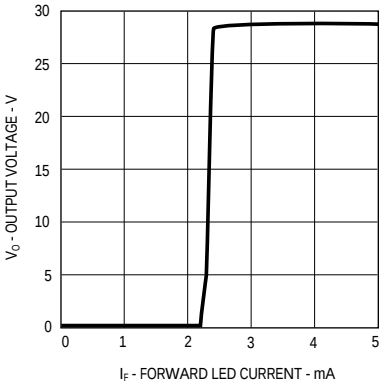

Figure 15. Transfer Characteristics

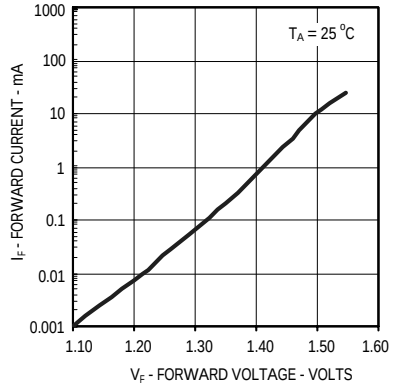

Figure 16. Input Current vs. Forward Voltage

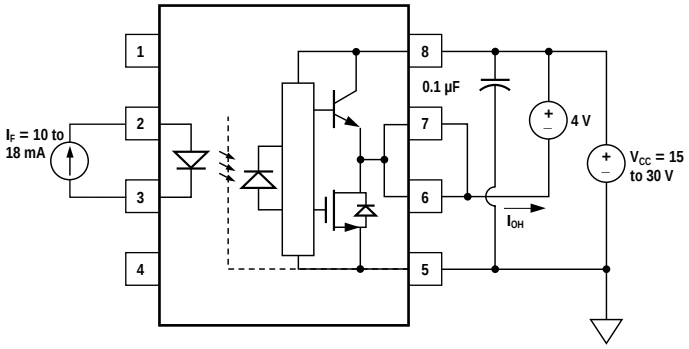

Figure 17. I_{OH} Test Circuit

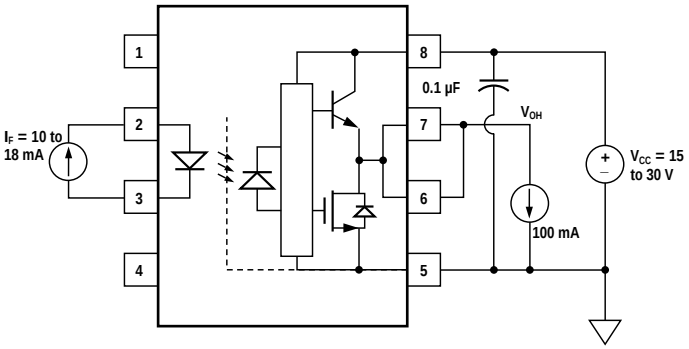

Figure 19. V_{OH} Test Circuit

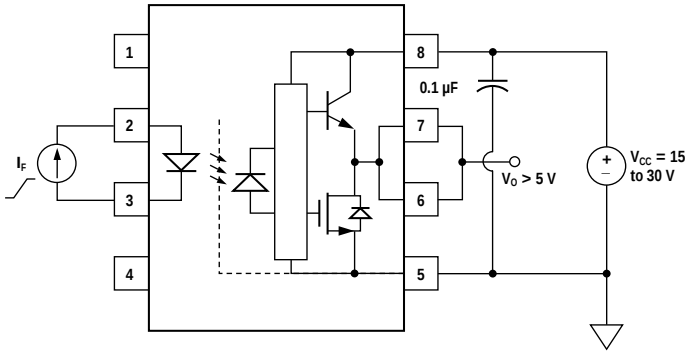

Figure 21. I_{FLH} Test Circuit

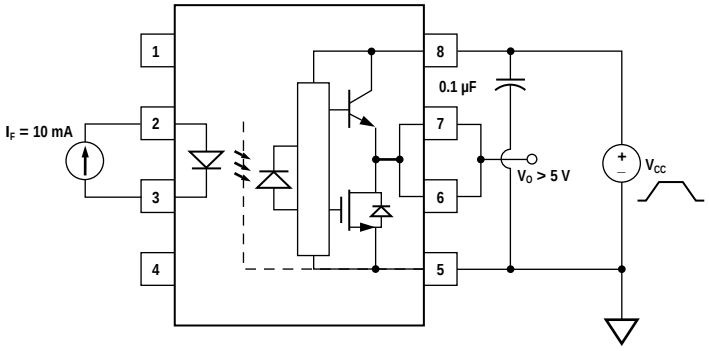

Figure 22. UVLO Test Circuit

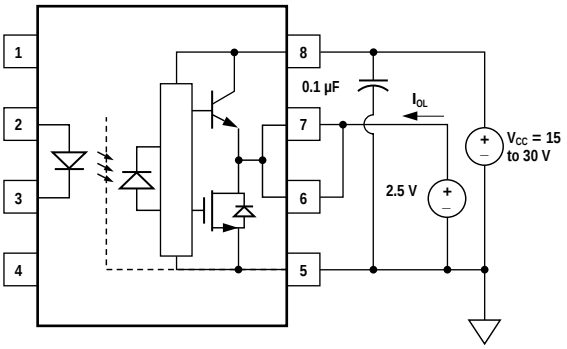

Figure 18. I_{OL} Test Circuit

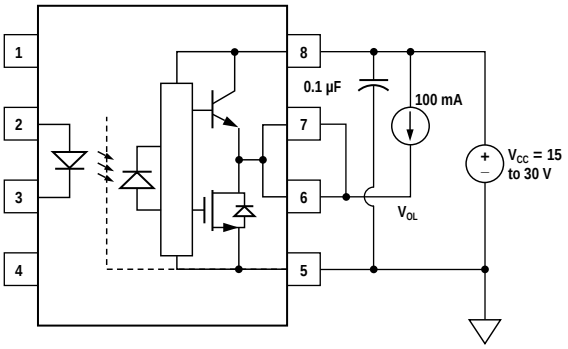

Figure 20. V_{OL} Test Circuit

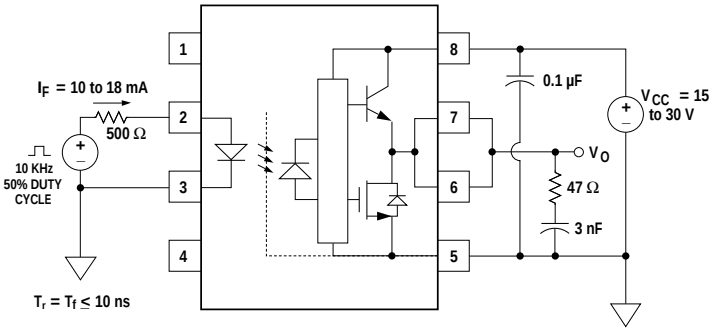

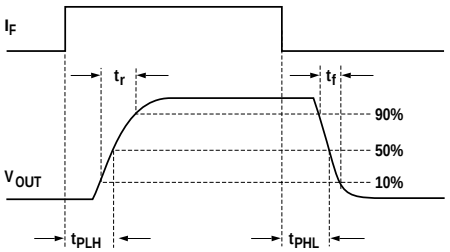

Figure 23. t_{PLH}, t_{PHL}, t_r, and t_f Test Circuit and Waveforms

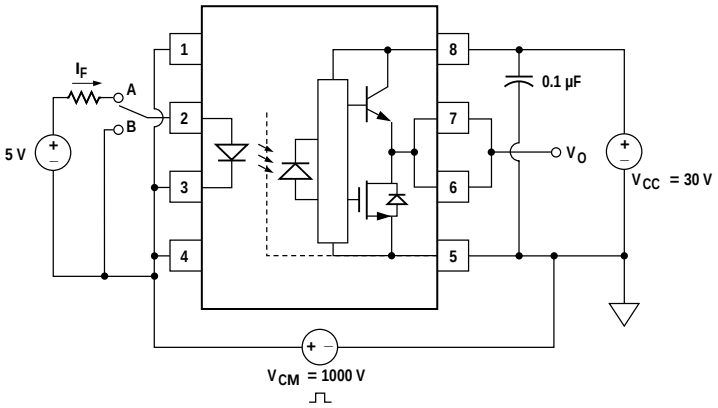

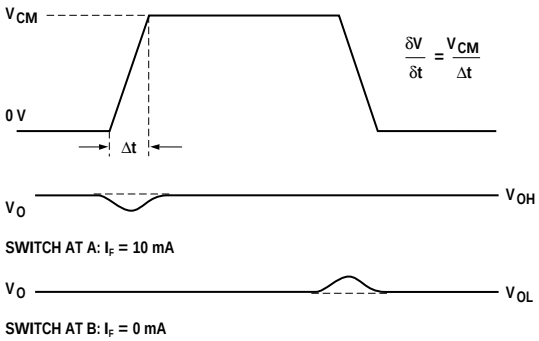

Figure 24. CMR Test Circuit and Waveforms

Applications Information

Eliminating Negative IGBT Gate Drive

To keep the IGBT firmly off, the HCPL-5150 has a very low maximum V_{OL} specification of 1.0 V. The HCPL-5150 realizes this very low V_{OL} by using a DMOS transistor with 4 Ω (typical) on resistance in its pull down circuit. When the HCPL-5150 is in the low state, the IGBT gate is shorted to the emitter by R_g + 4 Ω. Minimizing R_g and the lead inductance from the HCPL-5150 to the IGBT gate and emitter (possibly by mounting the HCPL-5150 on a small PC board directly above the IGBT) can eliminate the need for negative IGBT gate drive in many applications as shown in Figure 25. Care should be taken with such a PC board design to avoid routing the IGBT collector or emitter traces close to the HCPL-5150 input as this can result in unwanted coupling of transient signals into the HCPL-5150 and degrade performance. (If the IGBT drain must be routed near the HCPL-5150 input, then the LED should be reverse-biased when in the off state, to prevent the transient signals coupled from the IGBT drain from turning on the HCPL-5150.)

Selecting the Gate Resistor (R_g) to Minimize IGBT Switching Losses.

Step 1: Calculate R_g Minimum from the I_{OL} Peak Specification.

The IGBT and R_g in Figure 26 can be analyzed as a simple RC circuit with a voltage supplied by the HCPL-5150.

$$R_g = \frac{(V_{CC} - V_{EE} - V_{OL})}{I_{OLPEAK}}$$

$$= \frac{(V_{CC} - V_{EE} - 1.7\ V)}{I_{OLPEAK}}$$

$$= \frac{(15\ V + 5\ V - 1.7\ V)}{0.6\ A}$$

$$= 30.5\ \Omega$$

The V_{OL} value of 2 V in the previous equation is a conservative value of V_{OL} at the peak current of 0.6 A (see Figure 6). At lower R_g values the voltage supplied by the HCPL-5150 is not an ideal voltage step. This results in lower peak currents (more margin) than predicted by this analysis. When negative gate drive is not used, V_{EE} in the previous equation is equal to zero volts.

Step 2: Check the HCPL-5150 Power Dissipation and Increase R_g if Necessary.

The HCPL-5150 total power dissipation (P_T) is equal to the sum of the emitter power (P_E) and the output power (P_O):

$$P_T = P_E + P_O$$

$$P_E = I_F \bullet V_F \bullet Duty\ Cycle$$

$$P_O = P_{O(BIAS)} + P_{O\ (SWITCHING)}$$

$$= I_{CC} \bullet (V_{CC} - V_{EE}) + E_{SW}(R_g, Q_g) \bullet f$$

For the circuit in Figure 26 with I_F (worst case) = 18 mA, R_g = 30.5 Ω, Max Duty Cycle = 80%, Q_g = 250 nC, f = 20 kHz and T_A max = 125°C:

$$P_E = 18\ mA \bullet 1.8\ V \bullet 0.8 = 26\ mW$$

$$P_O = 4.25\ mA \bullet 20\ V + 2.0\ \mu J \bullet 20\ kHz$$

$$= 85\ mW + 40\ mW$$

$$= 125\ mW$$

$$> 112\ mW\ (P_{O(MAX)}@125°C = 250mW - 23°C \bullet 6mW/°C)$$

The value of 4.25 mA for I_{CC} in the previous equation was obtained by derating the I_{CC} max of 5 mA (which occurs at -55°C) to I_{CC} max at 125°C.

Since P_O for this case is greater than $P_{O(MAX)}$, Rg must be increased to reduce the HCPL-5120 power dissipation.

$$P_{O(SWITCHING\ MAX)}$$

$$= P_{O(MAX)} - P_{O(BIAS)}$$

$$= 112mW - 85\ mW$$

$$= 27\ mW$$

$$E_{SW(MAX)} = \frac{P_{O(SWITCHINGMAX)}}{f}$$

$$= \frac{27\ mW}{20kHz} = 1.35\mu J$$

For Q_g = 250 nC, from Figure 27, a value of $E_{SW} = 1.35\ \mu J$ gives a R_g = 90Ω.

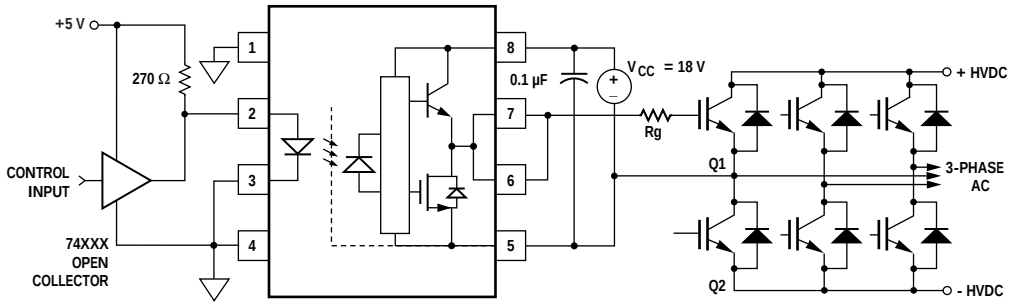

Figure 25. Recommended LED Drive and Application Circuit

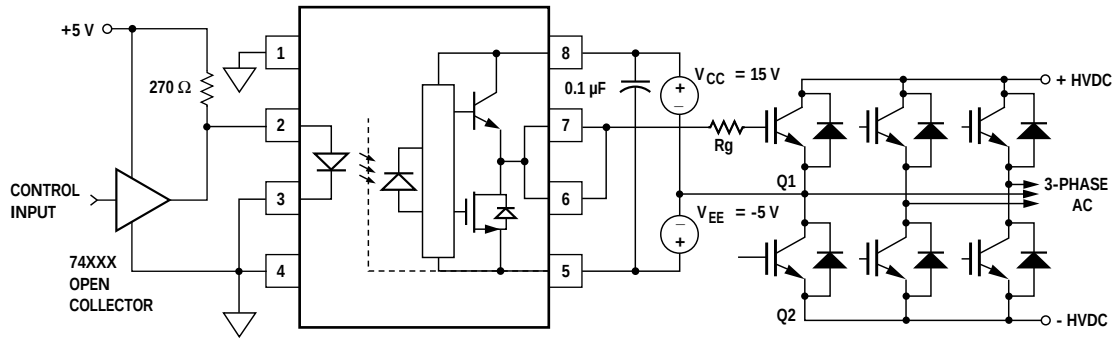

Figure 26. Typical Application Circuit with Negative IGBT Gate Drive

P_E Parameter	Description
I_F	LED Current
V_F	LED On Voltage
Duty Cycle	Maximum LED Duty Cycle

P_O Parameter	Description
I_{CC}	Supply Current
V_{CC}	Positive Supply Voltage
V_{EE}	Negative Supply Voltage
E_{SW} (R_g, Q_g)	Energy Dissipation in the HCPL-5150 for each IGBT Switching Cycle (See Figure 27)
f	Switching Frequency

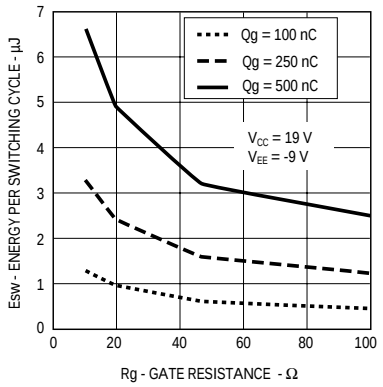

Figure 27. Energy Dissipated in the HCPL-5150 for Each IGBT Switching Cycle

LED Drive Circuit Considerations for Ultra High CMR Performance.

Without a detector shield, the dominant cause of optocoupler CMR failure is capacitive coupling from the input side of the optocoupler, through the package, to the detector IC as shown in Figure 28.

The HCPL-5150 improves CMR performance by using a detector IC with an optically transparent Faraday shield, which diverts the capacitively coupled current away from the sensitive IC circuitry. However, this shield does not eliminate the capacitive coupling between the LED and optocoupler pins 5-8 as shown in Figure 29. This capacitive coupling causes perturbations in the LED current during common mode transients and becomes the major source of CMR failures for a shielded optocoupler. The main design objective of a high CMR LED drive circuit becomes keeping the LED in the proper state (on or off) during common mode transients. For example, the recommended application circuit, (Figure 25) can achieve 10 kV/µs CMR while minimizing component complexity. Techniques to keep the LED in the proper state are discussed in the next two sections.

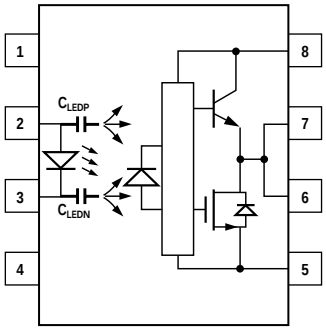

Figure 28. Optocoupler Input to Output Capacitance Model for Unshielded Optocouplers

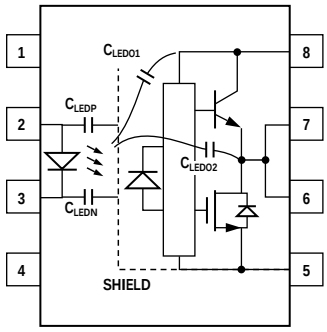

Figure 29. Optocoupler Input to Output Capacitance Model for Shielded Optocouplers

CMR with the LED On (CMR_H).

A high CMR LED drive circuit must keep the LED on during common mode transients. This is achieved by overdriving the LED current beyond the input threshold so that it is not pulled below the threshold during a transient. A minimum LED current of 10 mA provides adequate margin over the maximum I_{FLH} of 7 mA to achieve 10 kV/µs CMR.

CMR with the LED Off (CMR_L).

A high CMR LED drive circuit must keep the LED off ($V_F \leq V_{F(OFF)}$) during common mode transients. For example, during a $-dV_{CM}/dt$ transient in Figure 30, the current flowing through C_{LEDP} also flows through the R_{SAT} and V_{SAT} of the logic gate. As long as the low state voltage developed across the logic gate is less than $V_{F(OFF)}$, the LED will remain off and no common mode failure will occur.

The open collector drive circuit, shown in Figure 31, cannot keep the LED off during a $+dV_{CM}/dt$ transient, since all the current flowing through C_{LEDN} must be supplied by the LED, and it is not recommended for applications requiring ultra high CMR_L performance. Figure 32 is an alternative drive circuit which, like the recommended application circuit (Figure 25), does achieve ultra high CMR performance by shunting the LED in the off state.

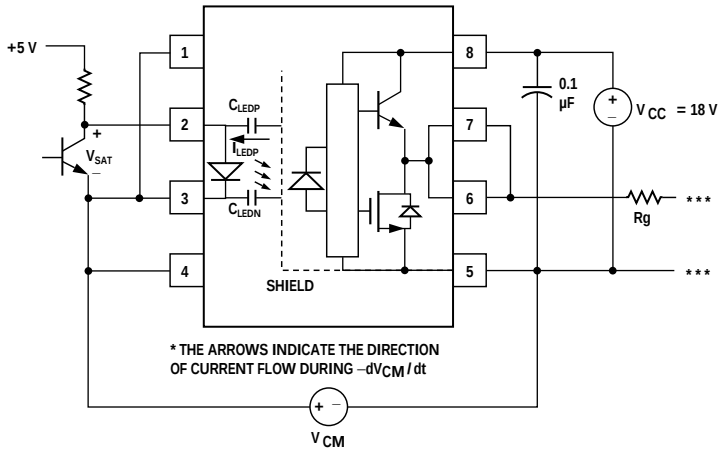

Figure 30. Equivalent Circuit for Figure 25 During Common Mode Transient

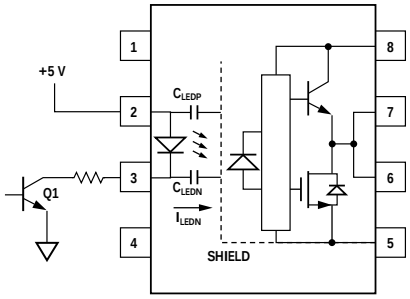

Figure 31. Not Recommended Open Collector Drive Circuit

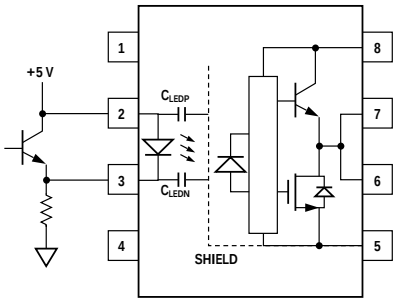

Figure 32. Recommended LED Drive Circuit for Ultra-High CMR

IPM Dead Time and Propagation Delay Specifications.

The HCPL-5150 includes a Propagation Delay Difference (PDD) specification intended to help designers minimize "dead time" in their power inverter designs. Dead time is the time period during which both the high and low side power transistors (Q1 and Q2 in Figure 25) are off. Any overlap in Q1 and Q2 conduction will result in large currents flowing through the power devices between the high and low voltage motor rail.

To minimize dead time in a given design, the turn on of LED2 should be delayed (relative to the turn off of LED1) so that under worst-case conditions, transistor Q1 has just turned off when transistor Q2 turns on, as shown in Figure 33. The amount of delay necessary to achieve this conditions is equal to the maximum value of the propagation delay difference specification, P_{DDMAX}, which is specified to be 350 ns over the operating temperature range of -55°C to 125°C.

Delaying the LED signal by the maximum propagation delay difference ensures that the minimum dead time is zero, but it does not tell a designer what the maximum dead time will be. The maximum dead time is equivalent to the difference between the maximum and minimum propagation delay difference specifications as shown in Figure 34. The maximum dead time for the HCPL-5150 is 700 ns (= 350 ns - (-350 ns)) over an operating temperature range of -55°C to 125°C.

Note that the propagation delays used to calculate PDD and dead time are taken at equal temperatures and test conditions since the optocouplers under consideration are typically mounted in close proximity to each other and are switching identical IGBTs.

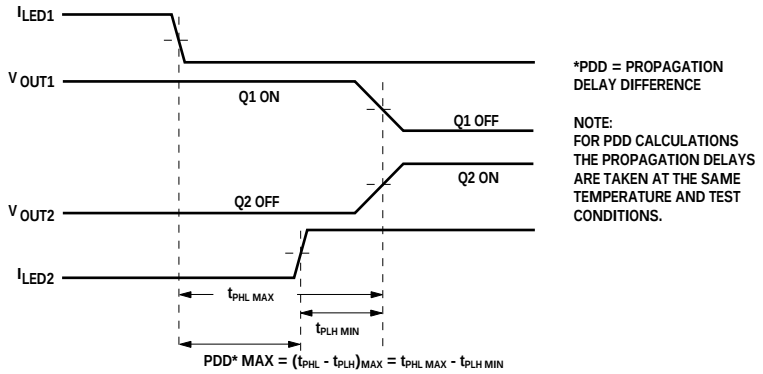

Figure 33. Minimum LED Skew for Zero Dead Time

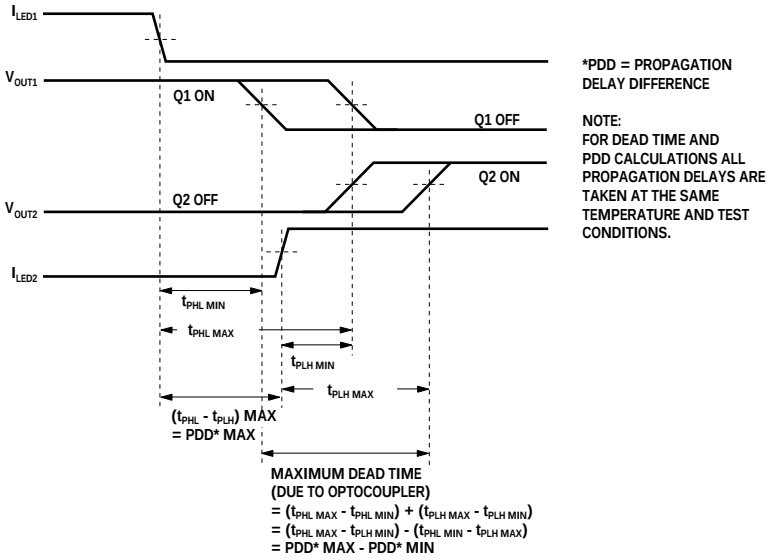

Figure 34. Waveforms for Dead Time Calculations

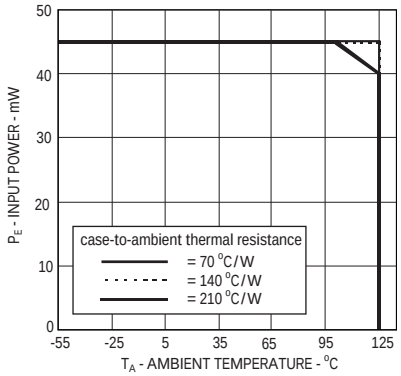

Figure 35. Input Thermal Derating Curve, Dependence of case-to-ambient Thermal Resistance

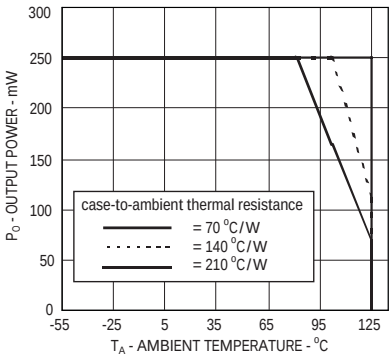

Figure 36. Output Thermal Derating Curve, Dependence of case-to-ambient Thermal Resistance

Under Voltage Lockout Feature.

The HCPL-5150 contains an under voltage lockout (UVLO) feature that is designed to protect the IGBT under fault conditions which cause the HCPL-5150 supply voltage (equivalent to the fully-charged IGBT gate voltage) to drop below a level necessary to keep the IGBT in a low resistance state. When the HCPL-5150 output is in the high state and the supply voltage drops below the HCPL-5150 V_{UVLO-} threshold ($9.5 < V_{UVLO-} < 12.0$) the optocoupler output will go into the low state with a typical delay, UVLO Turn Off Delay, of 0.6 µs.

When the HCPL-5150 output is in the low state and the supply voltage rises above the HCPL-5150 V_{UVLO+} threshold ($11.0 < V_{UVLO+} < 13.5$) the optocoupler output will go into the high state (assuming LED is "ON") with a typical delay, UVLO Turn On Delay of 0.8 µs.

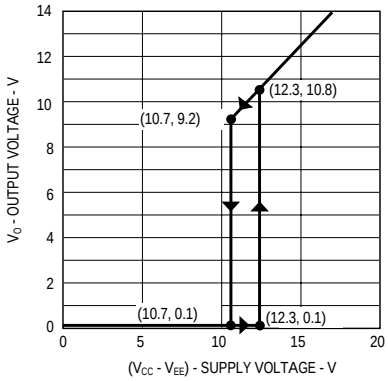

Figure 37. Under Voltage Lock Out

MIL-PRF-38534 Class H and DSCC SMD Test Program

Agilent Technologies' Hi-Rel Optocouplers are in compliance with MIL-PRF-38534 Class H. Class H devices are also in compliance with DSCC drawing 5962-04205.

Testing consists of 100% screening and quality conformance inspection to MIL-PRF-38534.

www.agilent.com/ semiconductors

For product information and a complete list of distributors, please go to our web site.

For technical assistance call:

Americas/Canada: +1 (800) 235-0312 or (916) 788-6763

Europe: +49 (0) 6441 92460

China: 10800 650 0017

Hong Kong: (+65) 6756 2394

India, Australia, New Zealand: (+65) 6755 1939

Japan: (+81 3) 3335-8152 (Domestic/International) or 0120-61-1280 (Domestic Only)

Korea: (+65) 6755 1989

Singapore, Malaysia, Vietnam, Thailand, Philippines, Indonesia: (+65) 6755 2044

Taiwan: (+65) 6755 1843

Data subject to change.
Copyright©2004 Agilent Technologies, Inc.
June 23, 2004
5989-0943EN

Agilent Technologies

Компания «ЭлектроПласт» предлагает заключение долгосрочных отношений при поставках импортных электронных компонентов на взаимовыгодных условиях!

Наши преимущества:

- Оперативные поставки широкого спектра электронных компонентов отечественного и импортного производства напрямую от производителей и с крупнейших мировых складов;
- Поставка более 17-ти миллионов наименований электронных компонентов;
- Поставка сложных, дефицитных, либо снятых с производства позиций;
- Оперативные сроки поставки под заказ (от 5 рабочих дней);
- Экспресс доставка в любую точку России;
- Техническая поддержка проекта, помощь в подборе аналогов, поставка прототипов;
- Система менеджмента качества сертифицирована по Международному стандарту ISO 9001;
- Лицензия ФСБ на осуществление работ с использованием сведений, составляющих государственную тайну;
- Поставка специализированных компонентов (Xilinx, Altera, Analog Devices, Intersil, Interpoint, Microsemi, Aeroflex, Peregrine, Syfer, Eurofarad, Texas Instrument, Miteq, Cobham, E2V, MA-COM, Hittite, Mini-Circuits,General Dynamics и др.);

Помимо этого, одним из направлений компании «ЭлектроПласт» является направление «Источники питания». Мы предлагаем Вам помощь Конструкторского отдела:

- Подбор оптимального решения, техническое обоснование при выборе компонента;
- Подбор аналогов;
- Консультации по применению компонента;
- Поставка образцов и прототипов;
- Техническая поддержка проекта;
- Защита от снятия компонента с производства.

Как с нами связаться

Телефон: 8 (812) 309 58 32 (многоканальный)
Факс: 8 (812) 320-02-42
Электронная почта: org@eplast1.ru
Адрес: 198099, г. Санкт-Петербург, ул. Калинина, дом 2, корпус 4, литера А.