Integrated Digital Receiver/Rate Converter

AD1892

FEATURES

Complete EIAJ CP-340 (CP-1201), IEC-958, AES/EBU, S/PDIF Compatible Digital Audio Receiver and Asynchronous Sample Rate Converter
Status Pins and Microprocessor Interfaces for Stand-Alone and Microcontroller-Oriented Operation
Integrated Channel Status Buffer and Q-Channel Subcode Buffer (Supports EIAJ CP-2401)
20-Bit SamplePort® Architecture Provides Superb Jitter Rejection on Input Port
Sample Rate Conversion from 8 kHz to 48 kHz with
1:5 Upsampling Range
1:0.85 Downsampling Range
120 dB Dynamic Range
–113 dB THD+N @ 1 kHz
CRC Calculation on Q-Channel Subcode (Consumer Mode Only) and on Channel Status (Pro Mode Only)
Four-Wire SPI™ Compatible Serial Control Port
Mute Input Pin
Power-Down Mode
Single +5 V Supply
Flexible Three-Wire Serial Data Port with Left-Justified, Right-Justified and I^2S-Compatible Modes
28-Lead SOIC Package

APPLICATIONS

DVD, DAT, MD, DCC and CD-R Recorders and Players
Computer Multimedia Products
DAB Receivers, Automotive Digital Audio Networks

PRODUCT OVERVIEW

The AD1892 combines a CP-1201, CP-340, IEC-958, AES/EBU, S/PDIF compatible Digital Audio Receiver (DAR) with an asynchronous sample rate converter, allowing the user to specify the output sample rate of the received digital audio information. The DAR block features support for both Q-channel subcode information (to support CD, CD-R, MD and DAT digital audio formats) as well as Channel Status information. A microcontroller interface, with an SPI compatible serial port, allows full access to the 80-bit Q-Channel subcode buffer and to the 32-bit Channel Status buffer, as well as to the control and status registers. Additionally, key status information from the incoming subframes and the Channel Status buffer is reported on status output pins on the AD1892, so the AD1892 may be used in systems that do not include a microcontroller or microprocessor.

The asynchronous sample rate converter block is based on market leading AD1890 family SamplePort rate conversion technology. The AD1892 offers a 1:5 upsampling range, and will downsample from 48 kHz to 44.1 kHz. Input audio word widths up to 20 bits are supported, and output audio word widths of 16 or 20 are supported, with 120 dB of dynamic range and –113 dB THD+N. The rate converter inherently rejects jitter on the recovered clocks from the incoming biphase-mark encoded stream. Indeed, sample rate conversion is highly synergistic with digital audio reception, allowing the use of a fully digital phase locked loop clock recovery scheme with highly robust clock recovery and jitter rejection.

(*continued on Page 4*)

FUNCTIONAL BLOCK DIAGRAM

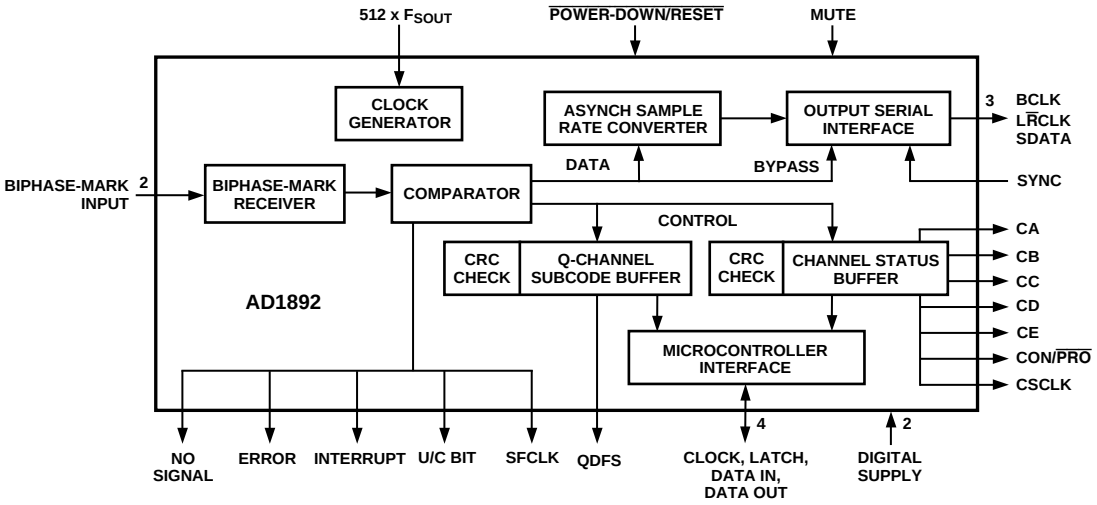

SamplePort is a registered trademark of Analog Devices, Inc.
SPI is a trademark of Motorola, Inc.

REV. 0

Information furnished by Analog Devices is believed to be accurate and reliable. However, no responsibility is assumed by Analog Devices for its use, nor for any infringements of patents or other rights of third parties which may result from its use. No license is granted by implication or otherwise under any patent or patent rights of Analog Devices.

One Technology Way, P.O. Box 9106, Norwood, MA 02062-9106, U.S.A.
Tel: 781/329-4700 World Wide Web Site: http://www.analog.com
Fax: 781/326-8703
© Analog Devices, Inc., 1998

AD1892–SPECIFICATIONS

TEST CONDITIONS UNLESS OTHERWISE NOTED

Supply Voltage	+5.0	V
Ambient Temperature	25	°C
Output Sample Frequency (F_{SOUT})	48.8	kHz
MCLK	25	MHz (512 × F_{SOUT})
Input Word Width	20	Bits
Load Capacitance	100	pF

All minimums and maximums tested except as noted.

PERFORMANCE[1]

	Min	Typ	Max	Units
Dynamic Range (20 Hz to 20 kHz, –60 dB Input)	120			dB
Total Harmonic Distortion + Noise				
(20 Hz to 20 kHz, Full-Scale Input)			–103	dB
(1 kHz Full-Scale Input)			–113	dB
(10 kHz Full-Scale Input)			–107	dB
Interchannel Phase Deviation			0	Degrees

DIGITAL I/O[1]

	Min	Typ	Max	Units
V_{IH}	2.4			V
V_{IL}			0.8	V
I_{IH} @ V_{IH} = +5.0 V			10	µA
I_{IL} @ V_{IL} = 0 V			10	µA
V_{OH} @ I_{OH} = –0.5 mA	DVDD – (0.5)			V
V_{OL} @ I_{OL} = 0.5 mA			0.5	V
Input Capacitance[1]		15		pF

DIGITAL TIMING[1]

		Min	Typ	Max	Units
t_{MCP}	MCLK Duty Cycle[1]	40		60	%
F_{MCLK}	MCLK Frequency ($1/t_{MCP}$)[1]			25	MHz
t_{PDRP}	$\overline{PD/RST}$ LO Pulsewidth	10 × MCLK Period			ns
t_{BDM}	BCLK Propagation Delay from MCLK (to Falling Edge)			30	ns
t_{LDM}	L$\overline{R}$CLK Propagation Delay from MCLK			30	ns
t_{DDP}	Data Propagation Delay from MCLK			30	ns
t_{DDS}	Data Output Setup to BCLK	1/2 BCLK Period			ns
t_{DDH}	Data Output Hold from BCLK	1/2 BCLK Period			ns
t_{SSU}	SYNC Falling Setup to MCLK Rising	5			ns
t_{CCH}	CCLK HI Pulsewidth	20			ns
t_{CCL}	CCLK LO Pulsewidth	20			ns
t_{CCP}	CCLK Period	8 × MCLK Period			ns
t_{CSU}	SDI Setup	15			ns
t_{CHD}	SDI Hold	10			ns
t_{COH}	SDO Propagation Delay from CCLK			30	ns
t_{SFPW}	SFCLK HI Pulsewidth[1]	100			ns
t_{SFSU}	U/CBIT, INT, ERROR Setup to SFCLK	100			ns
t_{CSPW}	CSCLK HI Pulsewidth[1]	100			ns
t_{QDH}	QDFS HI Pulsewidth[1]	1000			ns
t_{CLH}	CS HI Pulsewidth	10 × MCLK Period			ns
t_{CLK}	CS Falling Edge to CCLK Rising	3 × MCLK Period			ns
t_{RS}	PD/RST Rising to MCLK Rising Edge (Only Required for Synchronizing Multiple Parts)	5			ns

DIGITAL RS-422 RECEIVERS (RXP, RXN Pins Only)

	Min	Typ	Max	Units
Input Resistance		20		kΩ
Min Differential AES/EBU or S/PDIF Input	200			mV p-p
Input Hysteresis		20		mV

POWER

	Min	Typ	Max	Units
Supplies				
Voltage, DV_{DD}	4.5		5.5	V
Operational Current, I_{DD} (DV_{DD} = +5.0 V)		50	60	mA
Power-Down Current, I_{DD} (DV_{DD} = +5.0 V) ($\overline{PD/RST}$ LO)		3	6	mA
Dissipation[1]				
Operational (DV_{DD} = +5.0 V)		250	300	mW
Power-Down (DV_{DD} = +5.0 V) ($\overline{PD/RST}$ LO)		15	30	mW

TEMPERATURE RANGE

	Min	Max	Units
Specifications Guaranteed	–40	+85	°C
Storage	–55	+125	°C

ABSOLUTE MAXIMUM RATINGS[2]

	Min	Max	Units
DV_{DD} to DGND	–0.3	7.0	V
DC Input Voltage	–0.3	DV_{DD} + 0.3	V
Soldering		+300	°C
		10	sec

DIGITAL FILTER CHARACTERISTICS[1]

	Min	Max	Units
Passband Ripple (0 kHz to 20 kHz) (F_S = 44.1 kHz)		±0.015	dB
Group Delay (LRCLK = 50 kHz)	700	3000	µs

NOTES
[1]Guaranteed, not tested.
[2]Stresses greater than those listed under Absolute Maximum Ratings may cause permanent damage to the device. This is a stress rating only; functional operation of the device at these or any other conditions above those indicated in the operational section of this specification is not implied. Exposure to absolute maximum rating conditions for extended periods may affect device reliability.

Specifications subject to change without notice.

ORDERING GUIDE

Model	Temperature Range	Package Description	Package Options
AD1892JR	–40°C to +85°C	28-Lead SOIC	R-28
AD1892JRRL	–40°C to +85°C	28-Lead SOIC	R-28 on 13" Reels

CAUTION

ESD (electrostatic discharge) sensitive device. Electrostatic charges as high as 4000 V readily accumulate on the human body and test equipment and can discharge without detection. Although the AD1892 features proprietary ESD protection circuitry, permanent damage may occur on devices subjected to high energy electrostatic discharges. Therefore, proper ESD precautions are recommended to avoid performance degradation or loss of functionality.

(continued from Page 1)

PRODUCT OVERVIEW (Continued)

In addition to the Q-channel subcode and Channel Status buffers, the AD1892 includes two 8-bit control registers and two 8-bit status registers. The output data interface may be configured in left-justified, I^2S-justified and right-justified modes. The AD1892 includes hardware power-down/reset and mute control inputs, and power-down/reset and mute may also be invoked through write to bits in the control registers. The AD1892 operates from a master clock that must be synchronous with the output sample rate at $512 \times F_S$. Cyclic Redundancy Coding (CRC) error detection is performed over the full 80 bits of the received Q-channel subcode information in consumer mode, as well as the full 192 bits of the received Channel Status information in professional mode.

The AD1892 includes a SYNC input (Pin 23) that allows multiple AD1892s in a system to be synchronized to a common LEFT/$\overline{\text{RIGHT}}$ clock.

The AD1892 is offered in a 28-lead SOIC package. It operates over the industrial temperature range from –40°C to +85°C at a supply voltage from 4.5 V to 5.5 V. The only external components required to support the AD1892 are power supply decoupling capacitors.

DEFINITIONS

Dynamic Range

The ratio of a full-scale input signal to the integrated noise in the passband (0 kHz to ≈20 kHz), expressed in decibels (dB). Dynamic range is measured with a –60 dB input signal and "60 dB" arithmetically added to the result. This measurement technique is consistent with the recommendations of the Audio Engineering Society (AES17-1991) and the Electronic Industries Association of Japan (EIAJ CP-307).

Total Harmonic Distortion + Noise

Total Harmonic Distortion plus Noise (THD+N) is defined as the ratio of the square root of the sum of the squares of the values of the harmonics and noise to the value of the fundamental input frequency. It is usually expressed in percent (%) or decibels.

Interchannel Phase Deviation

Difference in input sampling times between stereo channels, expressed as a phase difference in degrees between 1 kHz inputs.

Group Delay

The time interval required for the frequency components of an input pulse to appear at the converter's output, expressed in milliseconds (ms). More precisely, the derivative of radian phase with respect to radian frequency at a given frequency.

AD1892 PIN LIST

Biphase-Mark Serial Input

Pin Name	SOIC	I/O	Description
RXP	13	I	Positive differential biphase-mark serial digital audio receiver input. 20 mV hysteresis.
RXN	14	I	Negative differential biphase-mark serial digital audio receiver input. 20 mV hysteresis.

Serial Output Interface

Pin Name	SOIC	I/O	Description
SDATA	24	O	Serial output, MSB first, containing two channels of 16 to 20 bits (default) of twos-complement data per channel, depending on control register settings. The data can be configured in I^2S-justified (default), left-justified, and right-justified orientations, depending on control register settings. See Figure 36 for timing.
BCLK	26	O	Bit clock output for output data. Frequency is either $32 \times F_S$ (packed mode) or $64 \times F_S$ (default), depending on control register settings. See Figure 36 for timing.
L$\overline{\text{R}}$CLK	25	O	LEFT/$\overline{\text{RIGHT}}$ clock output for output data. Runs continuously and is a synchronous divide-down from MCLK (MCLK/512). See Figure 36 for timing.
SYNC	23	I	The SYNC input allows multiple AD1892s in a system to be phase and group delay synchronized to the same LEFT/$\overline{\text{RIGHT}}$ clock. The SYNC signal resets internal AD1892 counters such that 512 MCLK cycles after the falling edge of SYNC, the AD1892 data will be valid, and the AD1892 L$\overline{\text{R}}$CLK signal will change state. It is recommended that the SYNC input be used only when the AD1892 is in the $64 \times F_{SOUT}$ BCLK mode (default configuration). GND when not in use.

Decoded Channel Status Outputs

Pin Name	SOIC	I/O	Description
CA	21	O	In consumer or professional mode, CA is the inverse of Channel Status Bit 1, Byte 0 ($\overline{\text{C1}}$, audio/nonaudio). CA = 0 indicates nonaudio, CA = 1 indicates audio. CA = 0 can be used to indicate Dolby AC-3 encoded data.
CB	20	O	In consumer mode, CB is the inverse of Channel Status Bit 2, Byte 0 ($\overline{\text{C2}}$, copy/copyright). CB = 0 indicates copy permitted/copyright not asserted; CB = 1 indicates copy inhibited/copyright asserted. In professional mode, CB is defined as EM0, the least significant bit of the two bits that encodes the emphasis status of the audio material.

Decoded Channel Status Outputs (Continued)

Pin Name	SOIC	I/O	Description
CC	19	O	In consumer mode, CC is the inverse Channel Status Bit 3, Byte 0 ($\overline{C3}$, pre-emphasis). CC = 0 indicates that the audio material has been pre-emphasized; CC = 1 indicates that the audio material has not been pre-emphasized. In professional mode, CC is the most significant bit of the two bits that encodes the emphasis status of the audio material. Table I illustrates the professional mode emphasis encoding.
CD	18	O	In consumer mode, CD indicates that the audio material is original over all category codes. The state of this bit is affected by both the generation status "L" bit (Channel Status Bit 15, Byte 1) and the category code (Channel Status Bits 8 through 14, Byte 1) since the definition of the L bit is reversed for three of the category codes (001XXXX, 0111XXX, and 100XXXX). CD = 0 indicates that the audio material is original. CD = 1 indicates that the audio material is a copy (first generation or higher). In professional mode, CD is the inverse of Channel Status Bit 9, Byte 1. CD provides some information about channel mode. See below for additional details.
CE	17	O	In consumer mode, CE indicates the so-called "ignorant" category codes of "general" (0000 000) and "A/D converter without copyright information" (0110 000). CE = 1 indicates that the audio material is not encoded using an ignorant category code. CE = 0 indicates that the audio material is encoded using an ignorant category code. This status output can be used in conjunction with the CD output (Pin 18) to implement SCMS copy protection. See below for additional details. In professional mode, CE indicates a Cyclic Redundancy Code (CRC) check error. CE = 0 indicates that the calculated CRC value does not match the received CRC value. CE = 1 indicates that the calculated CRC value does match the received CRC value. CE may be used to enable the display of the CA through CD states. If CE = 0, then CA through CD may be considered to be in error, and their display should not be updated. The Table II summarizes the function of the CA through CE pins, depending on the operating mode (professional or consumer).
CON/$\overline{PRO}$	15	O	CON/$\overline{PRO}$ is defined as the inverse Channel Status bit 0, byte 0 (C0, pro/consumer). CON/$\overline{PRO}$ = 0 indicates professional mode. CON/$\overline{PRO}$ = 1 indicates consumer mode. The state of this pin internally determines the consumer/pro mode of the CA, CB, CC, CD and CE pins.
CSCLK	16	O	Channel Status Clock. Active HI (rising edge active). Outputs a pulse every 192 frames at the start of the Channel Status block. Use the falling edge of this clock to latch the CA through CE and CON/$\overline{PRO}$ output Channel Status signals. See Figure 38 for timing.

Table I. Professional Mode Emphasis Encoding

AD1892 Output		BYTE 0 Channel Status Bit			
CC	CB	C2	C3	C4	Status
1	1	0	0	0	Emphasis not indicated. Receiver defaults to no emphasis with manual override enabled.
1	0	1	0	0	None. Receiver manual override disabled.
0	1	1	1	0	50/15 µs. Receiver manual override disabled.
0	0	1	1	1	CCITT J. 17. Receiver manual override disabled.

Table II. Decoded Channel Status Output Functions

Pin	Consumer	Professional
CA	0 = Audio, 1 = Nonaudio	0 = Audio, 1 = Nonaudio
CB	0 = Copy Permitted, 1 = Copy Inhibited	Pre-emphasis Encoding
CC	0 = Pre-emphasis, 1 = No Pre-emphasis	Pre-emphasis Encoding
CD	0 = Original, 1 = Copy	Inverse of Channel Status Bit 9
CE	0 = Ignorant Category, 1 = Not Ignorant	0 = C.S. CRC Error, 1 = No C.S. CRC Error

Subframe Status Outputs

Pin Name	SOIC	I/O	Description
NOSIG	12	O	NOSIG (No Signal) is asserted HI when no biphase-mark input is applied to the AD1892 when either the input sample rate is too high for the applied master clock (MCLK) frequency or, equivalently, the master clock frequency is too low for the applied input sample rate. NOSIG is deasserted LO during normal operation. This signal is asynchronous and has no particular timing relationship with any of the clock signals associated with the AD1892.
ERROR	11	O	The ERROR pin is asserted HI when either a subframe parity error or a subframe validity error occurs. Logically, ERROR = PARITY ERROR or VALIDITY ERROR. The ERROR pin is deasserted LO when neither parity nor validity errors are detected. The state of this output pin is not directly reflected in the AD1892 status registers; rather, Status Register 0 has separate bits that indicate parity and validity errors. The ERROR output should be clocked using the SFCLK signal (Pin 8). The ERROR output signal is NOT sticky, so it can be used in applications that do not include a supporting microcontroller.
INT	10	O	INT (Interrupt) is asserted HI when any of the first 32 bits of Channel Status information changes from block to block or when the Q-Channel subcode track number (Q10 through Q17) changes from block to block (valid in consumer mode only). The Channel Status block spans 192 frames (or subframes, since either the left or right channel C bit is stored), and the Q-Channel subcode block spans 1176 subframes. INT is deasserted LO when neither the first 32 bits of Channel Status changes from block to block when the Q-Channel subcode track number changes from block to block. This output is mirrored in a status bit (Status Register 0, Bit 5). The INT output can be clocked using the SFCLK signal (Pin 8). The INT output signal is sticky and can only be cleared by reading Status Register 0.
U/CBIT	9	O	U/CBIT is either the subframe user bit or the Channel Status bit from the biphase-mark stream, fed out serially, valid on the rising edge of the SFCLK signal (Pin 8). The choice between user bit and Channel Status bit is determined by Bit 1 in Control Register 0 (0 user bit [default], 1 = Channel Status bit). Changes at the subframe rate (two times the incoming sample rate.) See Figure 39 for timing.
SFCLK	8	O	This SFCLK signal is used to clock the ERROR, INT and U/CBIT output status signals. Active LO (rising edge active); see Figure 39 for timing. It is a LO pulse at the subframe rate (two times the sample rate). The pulsewidth is approximately 1/64th of the incoming sample (frame) period.

Q-Channel Subcode Clock Output Signal

Pin Name	SOIC	I/O	Description
QDFS	6	O	QDFS (Q-Channel Data Frame Sync) is a framing pulse indicating if the AD1892 has finished collecting a full Q-Channel subcode block of user bits, which has a period of 1176 subframes. Can be used as an interrupt signal to a microcontroller. The QDFS output is HI for one subframe period. The QDFS frequency is 75 Hz when the incoming input sample rate is 44.1 kHz. See Figure 40 for timing information.

Serial Control Port Signals

Pin Name	SOIC	I/O	Description
CS	3	I	Chip Select/Latch signal for the serial control port. This input must be LO for any write or read operation using the serial control port to be valid. This input should be tied HI when using the AD1892 in a stand-alone (no external microcontroller) application. See the Serial Control Port Timing in Figure 37 and the text below for more information.
CCLK	2	I	Serial Control Port Clock. This rising edge active input samples the address and data associated with the serial control port. The frequency of CCLK signal must not exceed 1/8 the frequency of the MCLK (Pin 28) signal. See the Serial Control Port Timing in Figure 37 and the text below for more information.
SDI	4	I	Serial Data Input. This input signal is used to convey the serial 6-bit address, the read/$\overline{\text{write}}$ indication and the 8-bit write data for the AD1892 serial control port. See the Serial Control Port Timing in Figure 37 and the text below for more information.
SDO	5	O	Serial Data Output. This three-state output is used to convey the serial 8-bit read data for the AD1892 serial control port. It is a three-state output to allow multiple AD1892s to coexist on the same SPI serial bus. See the Serial Control Port Timing in Figure 37 and the text below for more information.

Power Supply Connections

Pin Name	SOIC	I/O	Description
DV_{DD}	22		Digital Supply. +5 V nominal supply voltage.
DGND	7		Digital Ground. +0 V nominal supply connection.

Miscellaneous

Pin Name	SOIC	I/O	Description
MCLK	28	I	Master clock. Must be $512 \times F_{SOUT}$, where F_{SOUT} is the desired output sample rate.
$\overline{PD/RST}$	1	I	Active LO power-down/reset, which clears all on-chip registers on the AD1892 to their default state and stops the on-chip clocks. Bring HI for normal chip operation.
MUTE	27	I	Mute input. HI hardware mutes the serial digital audio output to zeros (midscale). All control functions on the AD1892 (Channel Status, Q-Channel subcode, etc.) continue to function while the AD1892 is muted. Should be LO for normal operation.

PIN CONFIGURATION

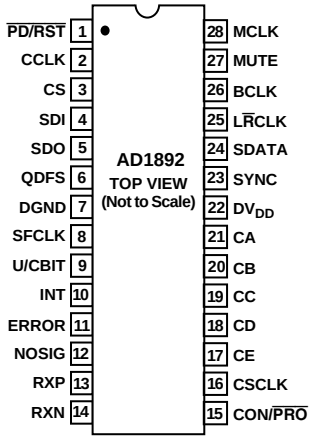

SERIAL DIGITAL AUDIO TRANSMISSION STANDARDS

The AD1892 can receive S/PDIF (Sony/Philips Digital Interface Format), AES/EBU (Audio Engineering Society/European Broadcasting Union, also known as AES3-1992), IEC-958 (International Electrotechnical Commission) and CP-340 (EIAJ [Electronic Industry Association of Japan] CP-1201) serial streams. S/PDIF is a consumer audio standard, and AES/EBU is a professional audio standard; IEC-958 and CP-340 have both consumer and professional definitions. This data sheet is not intended to fully define or to provide a tutorial for these standards; please contact these international standards setting bodies for the full specifications.

All of these digital audio serial communication schemes encode audio data and audio control information using the biphase-mark method. This encoding method minimizes the dc content of the transmitted signal and allows the receiver to decode clock information from the transmitted signal. As can be seen from Figure 1, ones in the original data end up with midcell transitions in the biphase-mark encoded data, while zeros in the original data do not. Note that the biphase-mark encoded data always has a transition between bit boundaries.

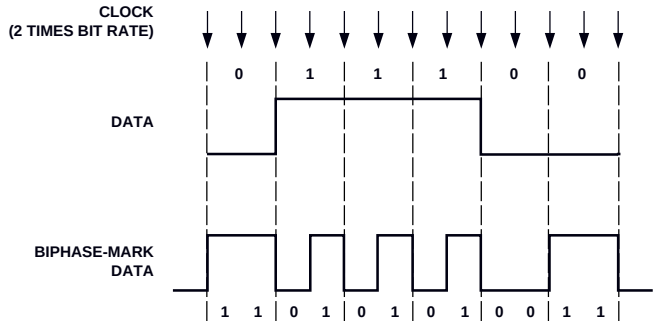

Figure 1. Biphase-Mark Encoding

Digital audio communication schemes use "preambles" to distinguish between channels (called "subframes") and between longer term control information blocks (called "frames"). Preambles are particular biphase-mark patterns, which contain encoding violations that allow the receiver to uniquely recognize them. These patterns, and their relationship to frames and subframes, are shown in Figures 2 and 3.

	BIPHASE PATTERNS	CHANNEL
X	11100010 OR 00011101	LEFT
Y	11100100 OR 00011011	RIGHT
Z	11101000 OR 00010111	LEFT AND C.S. BLOCK START

Figure 2. Biphase-Mark Encoded Preambles

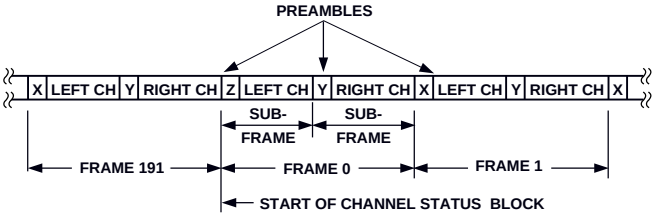

Figure 3. Preambles, Frames and Subframes

The biphase-mark encoding violations are shown in Figure 4. Note that all three preambles include encoding violations. Ordinarily, the biphase-mark encoding method results in a polarity transition between bit boundaries.

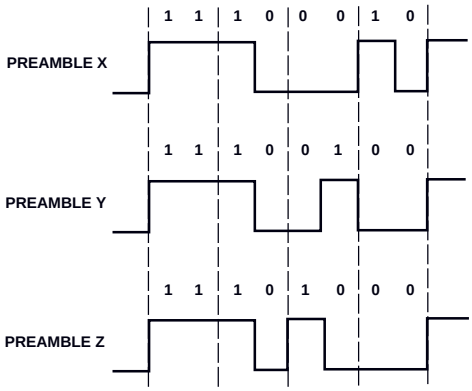

Figure 4. Preambles

As noted above, these serial digital audio communication schemes are organized using a frame and subframe construction. There are two subframes per frame (ordinarily the left and right channel). Each subframe includes the appropriate four bit preamble, four bits of "auxiliary" (aux) data, 20 bits of audio data (LSB first), a "validity" (V) bit, a "user" (U) data bit, a Channel Status (C) bit and an even parity (P) bit. The Channel Status bits and the user bits accumulate over many frames to convey control information. The Channel Status bits accumulate over a 192 frame period (called a Channel Status block). The user bits accumulate over 1176 frames when the interconnect is implementing the so-called "subcode" scheme (EIAJ CP-2401). The organization of the Channel Status block, frames and subframes is shown in Figure 5.

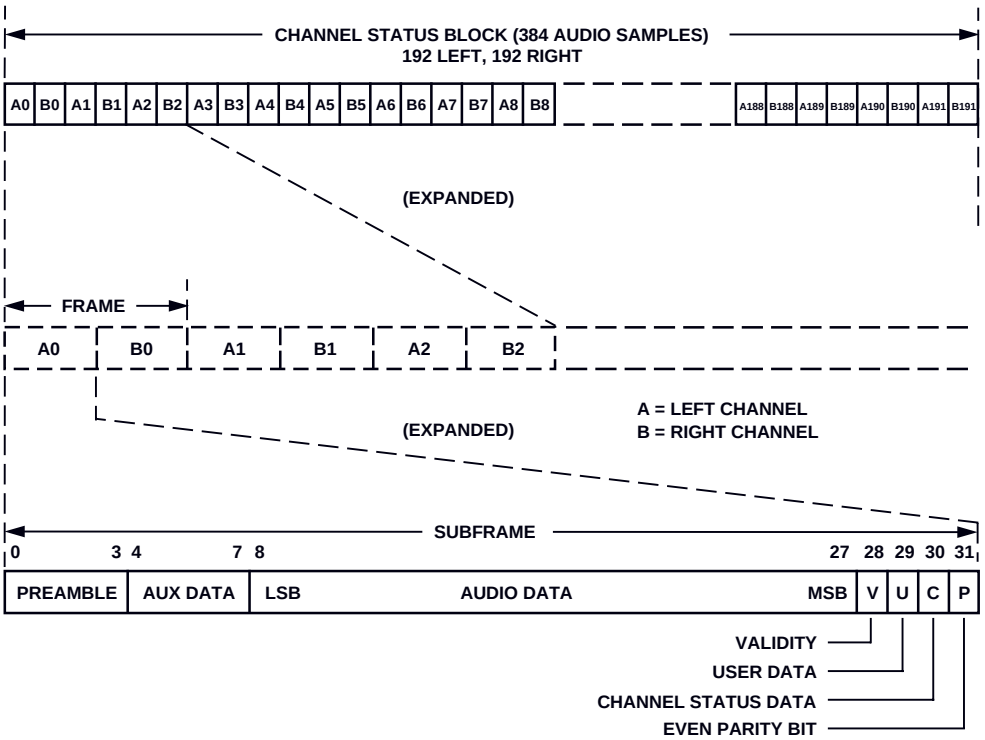

Figure 5. Block, Frame and Subframe Organization

As noted above, the Channel Status bit from each subframe accumulates over a 192 subframe period. The standards allow for the Channel Status bit in each subframe to be independent, but ordinarily the Channel Status bit in the two subframes of each frame are the same. The Channel Status bits are defined differently for the consumer audio standards and the professional audio standards. The 192 Channel Status bits are organized into 24 bytes and have the interpretations shown in Figures 6 through 16.

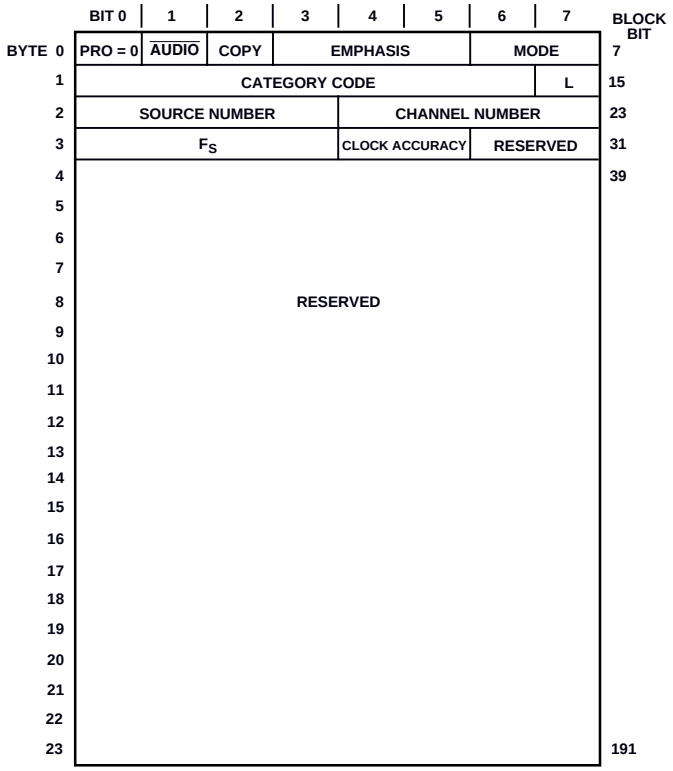

Figure 6. Consumer Channel Status Block Structure

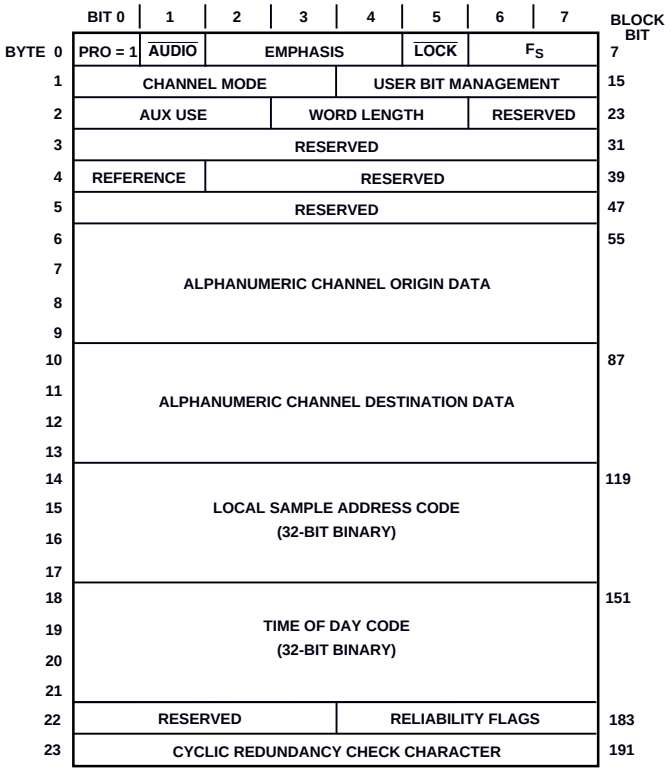

Figure 7. Professional Channel Status Block Structure

BYTE 0	
BIT 0	PRO = 0 (CONSUMER)
0	CONSUMER USE OF CHANNEL STATUS BLOCK.
1	PROFESSIONAL USE OF CHANNEL STATUS BLOCK.
BIT 1	$\overline{\text{AUDIO}}$
0	DIGITAL AUDIO.
1	NON-AUDIO. CAN BE USED TO INDICATE AC-3 DATA.
BIT 2	COPY/COPYRIGHT.
0	COPY INHIBITED/COPYRIGHT ASSERTED.
1	COPY PERMITTED/COPYRIGHT NOT ASSERTED.
BITS 3 4 5	PRE-EMPHASIS – IF BIT 1 = 0 (DIGITAL AUDIO)
0 0 0	NONE – 2 CHANNEL AUDIO.
1 0 0	50/15 µs – 2 CHANNEL AUDIO.
0 1 0	RESERVED – 2 CHANNEL AUDIO.
1 1 0	RESERVED – 2 CHANNEL AUDIO.
X X 1	RESERVED – 4 CHANNEL AUDIO.
BITS 3 4 5	IF BIT 1 = 1 (NON-AUDIO)
0 0 0	DIGITAL DATA.
X X X	ALL OTHER STATES OF BITS 3–5 ARE RESERVED.
BITS 6 7	MODE
0 0	MODE 0 (DEFINES BYTES 1–3)
X X	ALL OTHER STATES OF BITS 6–7 ARE RESERVED.

Figure 8. Consumer Channel Status Byte 0

BYTE 1		
BITS 0 1 2 3	4 5 6	CATEGORY CODE
0 0 0 0	0 0 0	GENERAL. "IGNORANT" CATEGORY CODE.
	0 0 1	EXPERIMENTAL.
	X X X	RESERVED.
0 0 0 1	X X X	SOLID STATE MEMORY.
0 0 1		BROADCAST RECEPTION OF DIGITAL AUDIO. L BIT DEFINITION REVERSED.
	0 0 0 0	JAPAN
	0 0 1 1	UNITED STATES.
	1 0 0 0	EUROPE.
	0 0 0 1	ELECTRONIC SOFTWARE DELIVERY.
	X X X X	ALL OTHER STATES ARE RESERVED.
0 1 0		DIGITAL/DIGITAL CONVERTERS
	0 0 0 0	PCM ENCODER/DECODER.
	0 0 1 0	DIGITAL SOUND SAMPLER.
	0 1 0 0	DIGITAL SIGNAL MIXER.
	1 1 0 0	SAMPLE RATE CONVERTER.
	X X X X	ALL OTHER STATES ARE RESERVED.
0 1 1 0		A/D CONVERTERS
	0 0 0	A/D CONVERTER W/O COPY PROTECTION INFO "IGNORANT" CATEGORY CODE.
	1 0 0	A/D CONVERTER W/COPY PROTECTION INFO (USING COPY AND L BITS).
0 1 1 1	X X X	BROADCAST RECEPTION OF DIGITAL AUDIO. L BIT DEFINITION REVERSED.
1 0 0		LASER OPTICAL. L BIT DEFINITION REVERSED.
	0 0 0 0	CD – COMPATIBLE WITH IEC-908.
	1 0 0 0	CD – NOT COMPATIBLE WITH IEC-908. (MAGNETO-OPTICAL).
	1 0 0 1	MD – MINIDISC.
	X X X X	ALL OTHER STATES ARE RESERVED.
1 0 1		MUSICAL INSTRUMENTS, MICS, ETC.
	0 0 0 0	SYNTHESIZER.
	1 0 0 0	MICROPHONE.
	X X X X	ALL OTHER STATES ARE RESERVED.
1 1 0		MAGNETIC TAPE OR DISK
	0 0 0 0	DAT – DIGITAL AUDIO TAPE.
	1 0 0 0	VIDEO TAPE RECORDER WITH DIGITAL AUDIO.
	0 0 0 1	DCC – DIGITAL COMPACT CASSETTE
	X X X X	ALL OTHER STATES ARE RESERVED.
1 1 1	X X X X	RESERVED
BIT 7	L: GENERATION STATUS	
	ONLY CATEGORY CODES: 1 0 0 X X X X, 0 0 1 X X X X, 0 1 1 1 X X X	
0	ORIGINAL/COMMERCIALLY PRE-RECORDED DATA.	
1	NO INDICATION /1ST GENERATION OR HIGHER.	
	ALL OTHER CATEGORY CODES	
0	NO INDICATION /1ST GENERATION OR HIGHER.	
1	ORIGINAL/COMMERCIALLY PRERECORDED DATA.	

Figure 9. Consumer Channel Status Byte 1

BYTE 2	
BITS 0 1 2 3	SOURCE NUMBER
0 0 0 0	UNSPECIFIED.
1 0 0 0	1
0 1 0 0	2
1 1 0 0	3
0 0 1 0	4 TO
0 1 1 1	14 (BINARY – BIT 0 IS LSB, BIT 3 IS MSB)
1 1 1 1	15
BITS 4 5 6 7	CHANNEL NUMBER
0 0 0 0	UNSPECIFIED.
1 0 0 0	A (LEFT IN 2 CHANNEL FORMAT)
0 1 0 0	B (RIGHT IN 2 CHANNEL FORMAT)
1 1 0 0	C TO
0 1 1 1	N (BINARY – BIT 4 IS LSB, BIT 7 IS MSB)
1 1 1 1	O

Figure 10. Consumer Channel Status Byte 2

BYTE 3	
BITS 0 1 2 3	F_S: SAMPLE FREQUENCY
0 0 0 0	44.1 kHz.
0 1 0 0	48 kHz.
1 1 0 0	32 kHz.
X X X X	ALL OTHER STATES OF BITS 0–3 ARE RESERVED.
BITS 4 5	CLOCK ACCURACY
0 0	LEVEL II, ±1000 ppm (DEFAULT).
0 1	LEVEL III, VARIABLE PITCH.
1 0	LEVEL I, ±50 ppm – HIGH ACCURACY.
1 1	RESERVED.
BITS 6 7	
X X	RESERVED.

BYTES 4–23
RESERVED

Figure 11. Consumer Channel Status Bytes 3 Through 23

BYTE 0	
BIT 0	PRO = 1 (PROFESSIONAL)
0	CONSUMER USE OF CHANNEL STATUS BLOCK.
1	PROFESSIONAL USE OF CHANNEL STATUS BLOCK.
BIT 1	$\overline{\text{AUDIO}}$
0	NORMAL AUDIO.
1	NON-AUDIO. CAN BE USED TO INDICATE AC-3 DATA.
BITS 2 3 4	ENCODED AUDIO SIGNAL EMPHASIS
0 0 0	EMPHASIS NOT INDICATED. RECEIVER DEFAULTS TO NO EMPHASIS WITH MANUAL OVERRIDE ENABLED.
1 0 0	NONE. RECEIVER MANUAL OVERRIDE DISABLED.
1 1 0	50/15 µs. RECEIVER MANUAL OVERRIDE DISABLED.
1 1 0	CCITT J.17. RECEIVER MANUAL OVERRIDE DISABLED.
X X X	ALL OTHER STATES OF BITS 2–4 ARE RESERVED.
BIT 5	$\overline{\text{LOCK}}$: SOURCE SAMPLE FREQUENCY
0	LOCKED–DEFAULT.
1	UNLOCKED.
BITS 6 7	F_S: SAMPLE FREQUENCY
0 0	SAMPLE FREQUENCY NOT INDICATED. RECEIVER DEFAULTS TO 48 kHz AND MANUAL OVERRIDE OR AUTO SET ENABLED.
0 1	48 kHz. MANUAL OVERRIDE OR AUTO SET DISABLED.
1 0	44.1 kHz. MANUAL OVERRIDE OR AUTO SET DISABLED.
1 1	32 kHz. MANUAL OVERRIDE OR AUTO SET DISABLED.

BYTE 1	
BITS 0 1 2 3	CHANNEL MODE
0 0 0 0	MODE NOT INDICATED. RECEIVER DEFAULTS TO 2-CHANNEL MODE. MANUAL OVERRIDE ENABLED.
0 0 0 1	TWO CHANNELS. MANUAL OVERRIDE DISABLED.
0 0 1 0	SINGLE CHANNEL. MANUAL OVERRIDE DISABLED.
0 0 1 1	PRIMARY/SECONDARY (CH. A IS PRIMARY). MANUAL OVERRIDE DISABLED.
0 1 0 0	STEREOPHONIC (CH. A IS LEFT). MANUAL OVERRIDE DISABLED.
0 1 0 1	RESERVED FOR USED DEFINED APPLICATIONS.
0 1 1 0	RESERVED FOR USED DEFINED APPLICATIONS.
1 1 1 1	VECTOR TO BYTE 3. RESERVED.
X X X X	ALL OTHER STATES OF BITS 0–3 ARE RESERVED.
BITS 4 5 6 7	USER BIT MANAGEMENT
0 0 0 0	DEFAULT. NO USER INFORMATION INDICATED.
0 0 0 1	192 BIT BLOCK STRUCTURE. PREAMBLE 'Z' STARTS BLOCK.
0 0 1 0	RESERVED.
0 0 1 1	USER DEFINED APPLICATION.
X X X X	ALL OTHER STATES OF BITS 4–7 ARE RESERVED.

Figure 12. Professional Channel Status Bytes 0 and 1

BYTE 2		
BITS 0 1 2	AUX: USE OF AUXILIARY SAMPLE BITS	
0 0 0	NOT DEFINED. MAXIMUM AUDIO WORD LENGTH IS 20 BITS.	
0 0 1	USED FOR MAIN AUDIO. MAXIMUM AUDIO WORD LENGTH IS 24 BITS.	
0 1 0	SINGLE COORDINATION SIGNAL. MAXIMUM AUDIO WORD LENGTH IS 20 BITS.	
0 1 1	USER DEFINED APPLICATION.	
X X X	ALL OTHER STATES OF BITS 0–2 ARE RESERVED.	
BITS 3 4 5	SOURCE WORD LENGTH	
	MAX. AUDIO 24 BITS	MAX. AUDIO 20 BITS
0 0 0	NOT INDICATED	NOT INDICATED (DEFAULT)
0 0 1	23 BITS	19 BITS
0 1 0	22 BITS	18 BITS
0 1 1	21 BITS	17 BITS
1 0 0	20 BITS	16 BITS
1 0 0	24 BITS	20 BITS
X X X	ALL OTHER STATES OF BITS 3–5 ARE RESERVED.	
BITS 6 7		
X X	RESERVED.	

Figure 13. Professional Channel Status Byte 2

BYTE 3	
BITS 0–7	VECTORED TARGET BYTE
X X X X X X X X	RESERVED.

BYTE 4	
BITS 0 1	DIGITAL AUDIO REFERENCE SIGNAL PER AES11-1990
0 0	NOT REFERENCE SIGNAL (DEFAULT).
0 1	GRADE 1 REFERENCE SIGNAL.
1 0	GRADE 2 REFERENCE SIGNAL.
1 1	RESERVED.
BITS 2–7	
X X X X X X	RESERVED.

BYTE 5	
BITS 0–7	
X X X X X X X X	RESERVED.

Figure 14. Professional Channel Status Bytes 3 Through 5

BYTES 6–9
ALPHANUMERIC CHANNEL ORIGIN DATA.
7-BIT ISO 646 (ASCII) DATA WITH ODD PARITY BIT. FIRST CHARACTER IN MESSAGE IS BYTE 6. LSBs ARE TRANSMITTED FIRST.

BYTES 10–13
ALPHANUMERIC CHANNEL ORIGIN DATA.
7-BIT ISO 646 (ASCII) DATA WITH ODD PARITY BIT. FIRST CHARACTER IN MESSAGE IS BYTE 10. LSBs ARE TRANSMITTED FIRST.

BYTES 14–17
LOCAL SAMPLE ADDRESS CODE (32-BIT BINARY)
VALUE IS OF FIRST SAMPLE OF CURRENT BLOCK. LSBs ARE TRANSMITTED FIRST.

BYTES 18–21
TIME-OF-DAY SAMPLE ADDRESS CODE (32-BIT BINARY).
VALUE IS OF FIRST SAMPLE OF CURRENT BLOCK. LSBs ARE TRANSMITTED FIRST.

Figure 15. Professional Channel Status Bytes 6 Through 21

BYTE 22	
BITS 0 1 2 3	
X X X X	RESERVED.
BIT 4	CHANNEL STATUS BYTES 0 TO 5
0	RELIABLE.
1	UNRELIABLE.
BIT 5	CHANNEL STATUS BYTES 6 TO 13
0	RELIABLE.
1	UNRELIABLE.
BIT 6	CHANNEL STATUS BYTES 14 TO 17
0	RELIABLE.
1	UNRELIABLE.
BIT 7	CHANNEL STATUS BYTES 18 TO 21
0	RELIABLE.
1	UNRELIABLE.

BYTE 23
CRCC: CYCLIC REDUNDANCY CHECK CHARACTER.
CRCC FOR CHANNEL STATUS DATA BLOCK THAT USES BYTES 0 TO 22 INCLUSIVE. GENERATING POLYNOMIAL IS: $G(x) = x^8 + x^4 + x^3 + x^2 + 1$ WITH AN INITIAL STATE OF ALL ONES.

Figure 16. Professional Channel Status Bytes 22 and 23

SERIAL CONTROL PORT

The serial control port on the AD1892 is a bidirectional interface that allows external microcontrollers and microprocessors to gain access to the two on-chip byte-wide control registers and to the sixteen on-chip byte-wide status registers. The serial control port is signal compatible with the Serial Peripheral Interface (SPI) standard, which has been popularized by Motorola's family of microcontroller and microprocessor products.

The basic timing for the serial control port is shown in Figure 17. The CS signal is both a chip select and a latch enable. CS must be LO for the duration of the read or write cycle. The CCLK signal is the data clock signal for the serial control port. The frequency of the CCLK signal must not exceed 1/8 the frequency of the MCLK signal applied to the AD1892. The incoming address and write data must be valid on the rising edge of CCLK, and the outgoing read data is guaranteed to be valid on the ring edge of CCLK. The SDI signal carries the serial address and write data to the AD1892. The SDO signal carries the serial read data from the AD1892. The address and data information is MSB first.

The serial control port write cycle is shown in Figure 18. In the first byte, the AD1892 defines a six bit write address field, a read/write bit (reset LO for a write cycle) and a reserved (res) bit. [The reserve (res) bit should be reset LO for both write and read cycles.] The data byte intended to be written to the specified write address follows immediately thereafter, MSB first. All information is carried on the SDI input, with the SDO output remaining in a high impedance (three-state) condition. The AD1892 defines only two valid write addresses, Control Register 1 and Control Register 2, which are defined below.

The serial control port read cycle is shown in Figure 19. The address information is presented on the SDI input (6-bit address, read/write set HI and a reserved bit). The data byte output from the addressed location is transmitted on the SDO output, MSB first. The AD1892 defines sixteen valid read addresses, comprising Status Register 1, Status Register 2, four bytes of Channel Status information and ten bytes of Q-Channel subcode information. All of these read addresses are defined below.

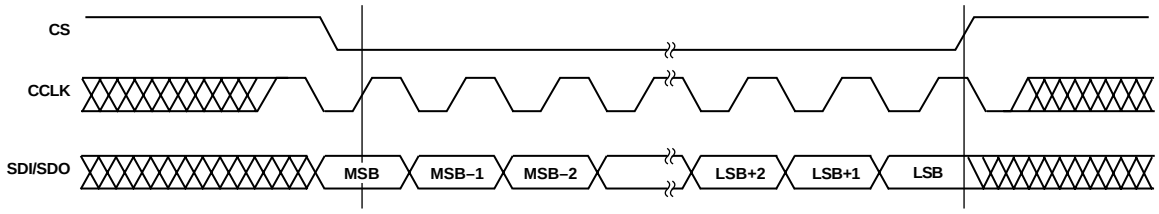

Figure 17. Serial Control Port Basic Timing

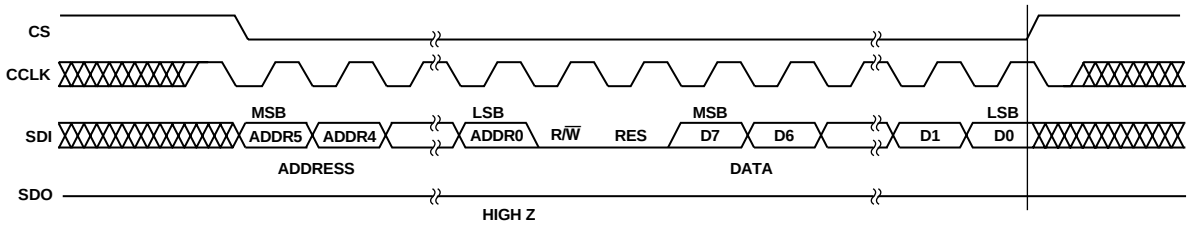

Figure 18. Serial Control Port Write Cycle

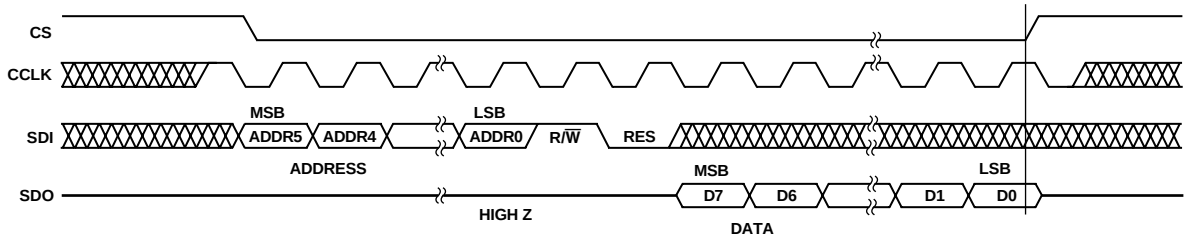

Figure 19. Serial Control Port Read Cycle

CONTROL/STATUS REGISTER ARCHITECTURE

The AD1892 includes two byte-wide control registers, two byte-wide status registers, four Channel Status registers and ten Q-Channel subcode registers. The bit map of the Control Registers are shown below in Figures 20 through 23.

CONTROL BUFFER – 2 BYTES

ADDRESS	D7	D6	D5	D4	D3	D2	D1	D0	
00 0000	RESERVED	RESERVED	RESERVED	RESERVED	RESERVED	CHANNEL STATUS LEFT/RIGHT	USER/CHANNEL STATUS BIT	POWER-DOWN/ RESET	CONTROL REGISTER 0
00 0001	MUTE	STEREO/ MONO	OUTPUT DATA WIDTH	OUTPUT DATA WIDTH	OUTPUT DATA WIDTH	DITHER	BCLK FREQUENCY	ASRC BYPASS	CONTROL REGISTER 1

Figure 20. Control Registers

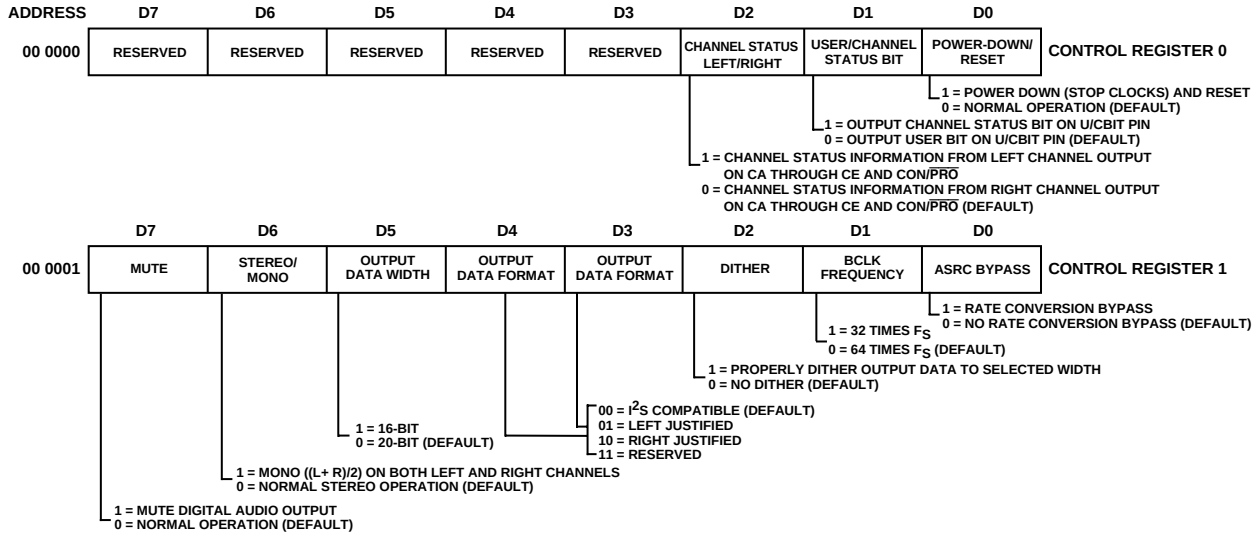

Figure 21. Control Register Bit Definitions

The bit map of the status registers in consumer mode are shown below in Figure 22.

STATUS BUFFER – 16 BYTES

ADDRESS	D7	D6	D5	D4	D3	D2	D1	D0	
00 0000	NO PHASE LOCK	CH. STATUS CRC ERROR	INTERRUPT (MIRRORS PIN)	ERROR (MIRRORS PIN)	CHANNEL STATUS CHANGE	VALIDITY ERROR	PARITY ERROR	CODING VIOLATION	STATUS REGISTER 0
00 0001	DAT START ID	Q-CHANNEL CRC ERROR	Q-CHANNEL BLOCK START	RESERVED RESET TO 0	RESERVED RESET TO 0	RESERVED RESET TO 0	RESERVED RESET TO 0	RESERVED RESET TO 0	STATUS REGISTER 1
00 0010	MODE	MODE	PRE-EMPHASIS	PRE-EMPHASIS	PRE-EMPHASIS	COPY/ COPYRIGHT	AUDIO/ NON-AUDIO	PRO/CON	CHANNEL STATUS BYTE 0
00 0011	GENERATION STATUS	CATEGORY CODE	CATEGORY CODE	CATEGORY CODE	CATEGORY CODE	CATEGORY CODE	CATEGORY CODE	CATEGORY CODE	CHANNEL STATUS BYTE 1
00 0100	CHANNEL NUMBER	CHANNEL NUMBER	CHANNEL NUMBER	CHANNEL NUMBER	SOURCE NUMBER	SOURCE NUMBER	SOURCE NUMBER	SOURCE NUMBER	CHANNEL STATUS BYTE 2
00 0101	RESERVED	RESERVED	CLOCK ACCURACY	CLOCK ACCURACY	SAMPLE FREQUENCY	SAMPLE FREQUENCY	SAMPLE FREQUENCY	SAMPLE FREQUENCY	CHANNEL STATUS BYTE 3
00 0110	ADDRESS	ADDRESS	ADDRESS	ADDRESS	CONTROL	CONTROL	CONTROL	CONTROL (Q2)	Q-CHANNEL SUBCODE BYTE 0
00 0111	TRACK NUMBER	TRACK NUMBER	TRACK NUMBER	TRACK NUMBER	TRACK NUMBER	TRACK NUMBER	TRACK NUMBER	TRACK NUMBER	Q-CHANNEL SUBCODE BYTE 1
00 1000	INDEX	INDEX	INDEX	INDEX	INDEX	INDEX	INDEX	INDEX	Q-CHANNEL SUBCODE BYTE 2
00 1001	MINUTE	MINUTE	MINUTE	MINUTE	MINUTE	MINUTE	MINUTE	MINUTE	Q-CHANNEL SUBCODE BYTE 3
00 1010	SECOND	SECOND	SECOND	SECOND	SECOND	SECOND	SECOND	SECOND	Q-CHANNEL SUBCODE BYTE 4
00 1011	FRAME	FRAME	FRAME	FRAME	FRAME	FRAME	FRAME	FRAME	Q-CHANNEL SUBCODE BYTE 5
00 1100	ZERO	ZERO	ZERO	ZERO	ZERO	ZERO	ZERO	ZERO	Q-CHANNEL SUBCODE BYTE 6
00 1101	ABSOLUTE MINUTE	ABSOLUTE MINUTE	ABSOLUTE MINUTE	ABSOLUTE MINUTE	ABSOLUTE MINUTE	ABSOLUTE MINUTE	ABSOLUTE MINUTE	ABSOLUTE MINUTE	Q-CHANNEL SUBCODE BYTE 7
00 1110	ABSOLUTE SECOND	ABSOLUTE SECOND	ABSOLUTE SECOND	ABSOLUTE SECOND	ABSOLUTE SECOND	ABSOLUTE SECOND	ABSOLUTE SECOND	ABSOLUTE SECOND	Q-CHANNEL SUBCODE BYTE 8
00 1111	ABSOLUTE FRAME (Q97)	ABSOLUTE FRAME	ABSOLUTE FRAME	ABSOLUTE FRAME	ABSOLUTE FRAME	ABSOLUTE FRAME	ABSOLUTE FRAME	ABSOLUTE FRAME	Q-CHANNEL SUBCODE BYTE 9

Figure 22. Status Registers—Consumer Mode

STATUS BUFFER – 16 BYTES PRO MODE

ADDRESS	D7	D6	D5	D4	D3	D2	D1	D0	
00 0000	NO PHASE LOCK	CH. STATUS CRC ERROR	INTERRUPT (MIRRORS PIN)	ERROR (MIRRORS PIN)	CHANNEL STATUS CHANGE	VALIDITY ERROR	PARITY ERROR	CODING VIOLATION	STATUS REGISTER 0
00 0001	NOT DEFINED	NOT DEFINED	NOT DEFINED	RESERVED RESET TO 0	RESERVED RESET TO 0	RESERVED RESET TO 0	RESERVED RESET TO 0	RESERVED RESET TO 0	STATUS REGISTER 1
00 0010	SAMPLE FREQUENCY	SAMPLE FREQUENCY	LOCKED/ UNLOCKED	PRE-EMPHASIS	PRE-EMPHASIS	PRE-EMPHASIS	AUDIO/ NON-AUDIO	CON/$\overline{\text{PRO}}$	CHANNEL STATUS BYTE 0
00 0011	USER BIT MANAGEMENT	USER BIT MANAGEMENT	USER BIT MANAGEMENT	USER BIT MANAGEMENT	CHANNEL MODE	CHANNEL MODE	CHANNEL MODE	CHANNEL MODE	CHANNEL STATUS BYTE 1
00 0100	RESERVED	RESERVED	WORD LENGTH	WORD LENGTH	WORD LENGTH	AUX USE	AUX USE	AUX USE	CHANNEL STATUS BYTE 2
00 0101	RESERVED	RESERVED	RESERVED	RESERVED	RESERVED	RESERVED	RESERVED	RESERVED	CHANNEL STATUS BYTE 3
00 0110	NOT DEFINED	NOT DEFINED	NOT DEFINED	NOT DEFINED	NOT DEFINED	NOT DEFINED	NOT DEFINED	NOT DEFINED	Q-CHANNEL SUBCODE BYTE 0
00 0111	NOT DEFINED	NOT DEFINED	NOT DEFINED	NOT DEFINED	NOT DEFINED	NOT DEFINED	NOT DEFINED	NOT DEFINED	Q-CHANNEL SUBCODE BYTE 1
00 1000	NOT DEFINED	NOT DEFINED	NOT DEFINED	NOT DEFINED	NOT DEFINED	NOT DEFINED	NOT DEFINED	NOT DEFINED	Q-CHANNEL SUBCODE BYTE 2
00 1001	NOT DEFINED	NOT DEFINED	NOT DEFINED	NOT DEFINED	NOT DEFINED	NOT DEFINED	NOT DEFINED	NOT DEFINED	Q-CHANNEL SUBCODE BYTE 3
00 1010	NOT DEFINED	NOT DEFINED	NOT DEFINED	NOT DEFINED	NOT DEFINED	NOT DEFINED	NOT DEFINED	NOT DEFINED	Q-CHANNEL SUBCODE BYTE 4
00 1011	NOT DEFINED	NOT DEFINED	NOT DEFINED	NOT DEFINED	NOT DEFINED	NOT DEFINED	NOT DEFINED	NOT DEFINED	Q-CHANNEL SUBCODE BYTE 5
00 1100	NOT DEFINED	NOT DEFINED	NOT DEFINED	NOT DEFINED	NOT DEFINED	NOT DEFINED	NOT DEFINED	NOT DEFINED	Q-CHANNEL SUBCODE BYTE 6
00 1101	NOT DEFINED	NOT DEFINED	NOT DEFINED	NOT DEFINED	NOT DEFINED	NOT DEFINED	NOT DEFINED	NOT DEFINED	Q-CHANNEL SUBCODE BYTE 7
00 1110	NOT DEFINED	NOT DEFINED	NOT DEFINED	NOT DEFINED	NOT DEFINED	NOT DEFINED	NOT DEFINED	NOT DEFINED	Q-CHANNEL SUBCODE BYTE 8
00 1111	NOT DEFINED	NOT DEFINED	NOT DEFINED	NOT DEFINED	NOT DEFINED	NOT DEFINED	NOT DEFINED	NOT DEFINED	Q-CHANNEL SUBCODE BYTE 9

Figure 23. Status Registers–Professional Mode

A detailed description of Status Registers 0 and 1 is given in Figure 24. Note that the bits in Status Register 0 and 1 are sticky and are cleared following a read cycle.

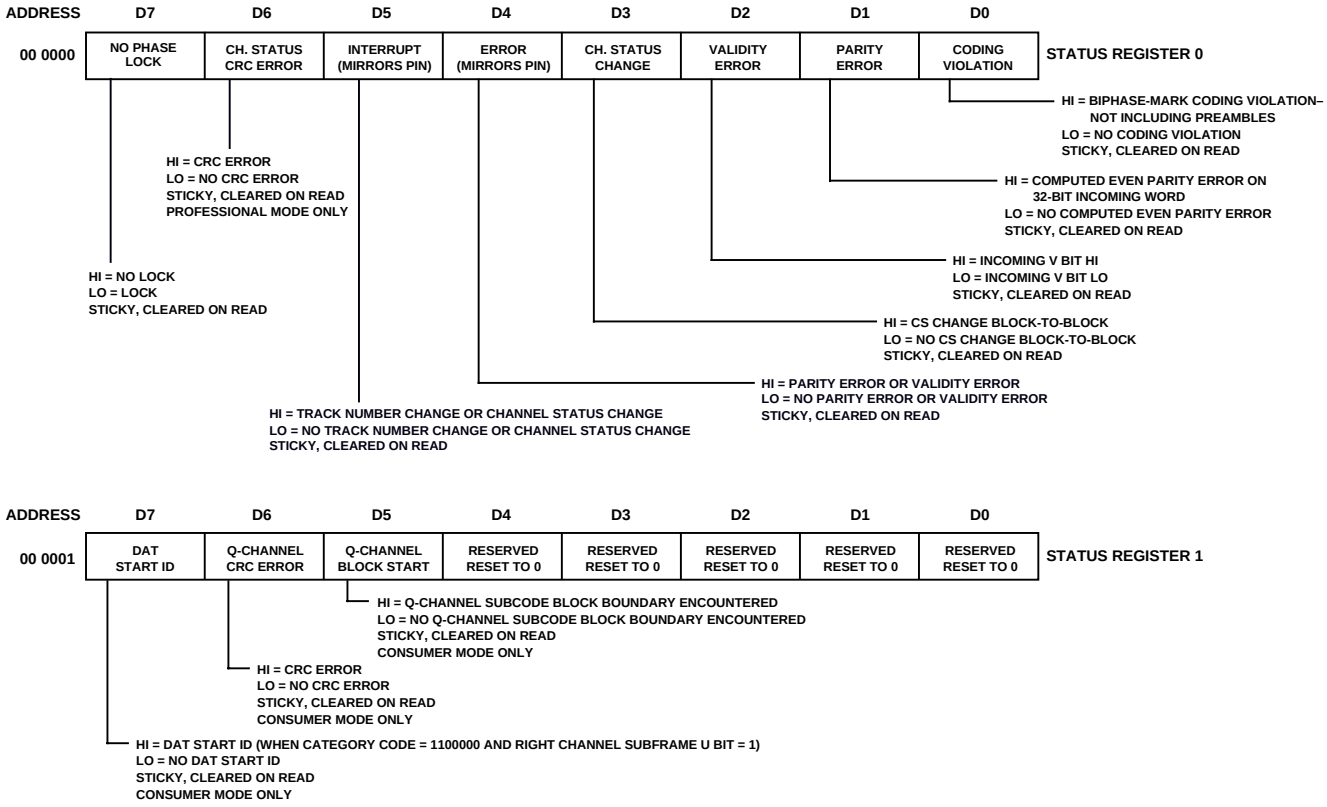

Figure 24. Status Register Bit Maps

The AD1892 includes an on-chip 10 byte Q-channel subcode buffer that is defined in consumer mode only. MiniDisc and Compact Disc systems use the Q-channel subcode information to convey format, track, index and timing information. The Q-channel is one of eight subcode channels defined (others being P, R, S, T, U, V and W). The other subcode channels are not supported by the AD1892. The subcode channels are formed by accumulating user bits over a period of 1176 subframes. The user bits from both the left channel subframe and the right channel subframe are used to construct the subcode control information. The user bits are accumulated into 98 12-bit words, that form a matrix of sorts. The incoming user bits fill this matrix row by row. The first two rows (S0 and S1) consist of all zeros and form an easily identified subcode sync word. The P-Channel subcode bit is always "1," except during the subcode sync word. The Q-channel is the first valid column of user bits, designated Q2 through Q97 in Figure 25 below.

		1	2	3	4	5	6	7	8	9	10	11	12	
98 12-BIT WORDS = 1176 BITS	S0	0	0	0	0	0	0	0	0	0	0	0	0	SUBCODE SYNC WORD
	S1	0	0	0	0	0	0	0	0	0	0	0	0	
	S2	1	Q2	R2	S2	T2	U2	V2	W2	0	0	0	0	
	S3	1	Q3	R3	S3	T3	U3	V3	W3	0	0	0	0	
		• • •	• • •	• • •	• • •	• • •	• • •	• • •	• • •	• • •	• • •	• • •	• • •	
	S97	1	Q97	R97	S97	T97	U97	V97	W97	0	0	0	0	
	S0	0	0	0	0	0	0	0	0	0	0	0	0	SUBCODE SYNC WORD
	S1	0	0	0	0	0	0	0	0	0	0	0	0	
	S2	1	Q2	R2	S2	T2	U2	V2	W2	0	0	0	0	
	S3	1	Q3	R3	S3	T3	U3	V3	W3	0	0	0	0	
		• • •	• • •	• • •	• • •	• • •	• • •	• • •	• • •	• • •	• • •	• • •	• • •	

ONLY Q-CHANNEL IS USED FOR CD AND MD SUBCODE

Figure 25. Subcode User Bit Accumulation

The AD1892 stores only the Q2 through Q97 user bits that comprise the Q-channel subcode information (96 bits); the remaining 1080 bits (1176–96) are ignored. These 96 bits of Q-channel subcode, organized in 12 bytes, are shown below in Figure 26.

Q2	Q3	Q4	Q5	Q6	Q7	Q8	Q9	Q10	Q11	Q12	Q13	Q14	Q15	Q16	Q17	Q18	Q19	Q20	Q21	Q22	Q23	Q24	Q25
CTRL				ADRS				TRACK NUMBER DATA9								INDEX DATA8							
DATA10																							

Q26	Q27	Q28	Q29	Q30	Q31	Q32	Q33	Q34	Q35	Q36	Q37	Q38	Q39	Q40	Q41	Q42	Q43	Q44	Q45	Q46	Q47	Q48	Q49
MINUTE DATA7								SECOND DATA6								FRAME DATA5							

Q50	Q51	Q52	Q53	Q54	Q55	Q56	Q57	Q58	Q59	Q60	Q61	Q62	Q63	Q64	Q65	Q66	Q67	Q68	Q69	Q70	Q71	Q72	Q73
ZERO DATA4								ABSOLUTE MINUTE DATA3								ABSOLUTE SECOND DATA2							

Q74	Q75	Q76	Q77	Q78	Q79	Q80	Q81	Q82	Q83	Q84	Q85	Q86	Q87	Q88	Q89	Q90	Q91	Q92	Q93	Q94	Q95	Q96	Q97
ABSOLUTE FRAME DATA1								16-BIT CRC WORD $G(x) = x^{16} + x^{12} + x^5 + 1$ COMPUTED OVER Q2 TO Q81															

Figure 26. Incoming Q-Channel Subcode

The incoming 16-bit CRC Word (Q82 through Q97) is routed to the AD1892 CRC circuit block. The CRC block generates a 16-bit polynomial against the first 80 bits of the incoming Q-channel subcode and flags a CRC error if the generated CRC is different from the incoming CRC (Q82 through Q97). Q-Channel CRC errors are flagged in the AD1892 Status Register 1 in position D6.

An external microcontroller or microprocessor can use the QDFS (Pin 6) output from the AD1892 as an interrupt to alert the microcontroller that a new Q-Channel block is ready. When the input sample rate is 44.1 kHz, the QDFS frequency is 75 Hz ([44,100 × 2]/1176 = 75).

OPERATING ISSUES

Serial Data Output Port

The AD1892 uses the frequency of the master clock (MCLK, Pin 28) to determine the output sample rate. The LRCLK signal is divided down from the master clock by a factor of 512. The phase of this division can be adjusted by using the sync input pin. The AD1892 is a clock master device; the audio data clocks, bit clock (BCLK, Pin 26) and left/right clock are outputs only. L$\overline{\text{R}}$CLK runs continuously and transitions twice per stereo sample period. BCLK also runs continuously and is used only to clock the audio data from the AD1892's serial data output port.

The AD1892's flexible serial data output port transmits data in twos-complement, MSB-first format. The left channel data field always precedes the right channel data field. The output data consists of 16 or 20 bits as established by settings in Control Register 1 (Bit D5). The BCLK frequency can be set to either $32 \times F_{SOUT}$ or $64 \times F_{SOUT}$ (default) using Bit D1 in Control Register 1.

Serial Output Port Modes

The AD1892 uses two bits in Control Register 1 to control the mode configuration of the output data port. Bits D4 and D3 program the output data port mode as shown in Table III.

Table III. Serial Output Port Mode Control Bits

D4	D3	Serial Output Port Mode
LO	LO	I^2S-Justified (See Figure 28) Default
LO	HI	Left-Justified (See Figure 29)
HI	LO	Right-Justified (See Figure 27)
HI	HI	Reserved

Note that in all three modes, the AD1892 is a "master" device, i.e., the L$\overline{\text{R}}$CLK, the BCLK and the SDATA signals are always outputs. This is also true in bypass mode.

Figure 27 shows the right-justified mode. L$\overline{\text{R}}$CLK is HI for the left channel and LO for the right channel. Data is valid on the rising edge of BCLK. The MSB is delayed 12-bit clock periods (in 20-bit output mode) or 16-bit clock periods (in 16-bit output mode) from an L$\overline{\text{R}}$CLK transition, so that when there are 64 BCLK periods per L$\overline{\text{R}}$CLK period, the LSB of the data will be right-justified to the next L$\overline{\text{R}}$CLK transition.

Figure 28 shows the default I^2S-justified mode. When the AD1892 is used without a supporting microcontroller or microprocessor, it will default to the I^2S-justified mode after reset. L$\overline{\text{R}}$CLK is LO for the left channel and HI for the right channel. Data is valid on the rising edge of BCLK. The MSB is left-justified to an L$\overline{\text{R}}$CLK transition but with a single BCLK period delay. The I^2S-justified mode can be used in either the 16-bit or the 20-bit output mode.

Figure 29 shows the left-justified mode. L$\overline{\text{R}}$CLK is HI for the left channel and LO for the right channel. Data is valid on the rising edge of BCLK. The MSB is left-justified to an L$\overline{\text{R}}$CLK transition with no MSB delay. The left-justified mode can be used in the 16-bit or 20-bit output mode.

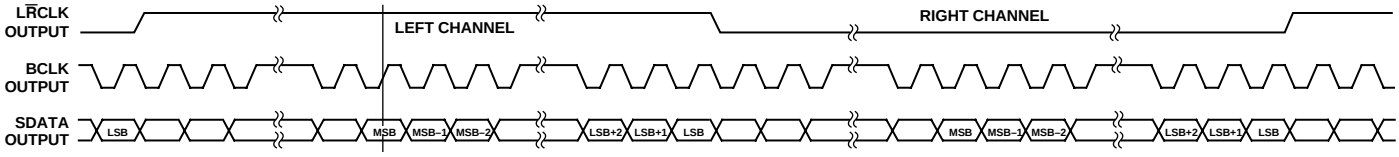

Figure 27. Right-Justified Mode

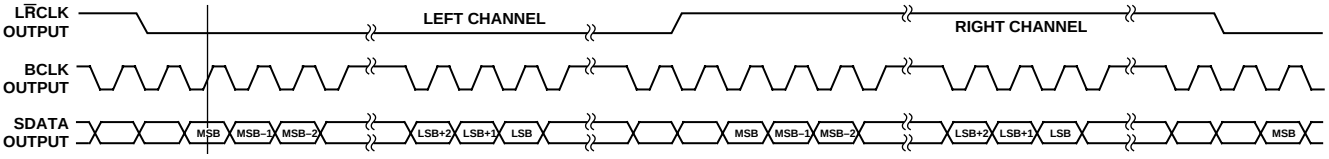

Figure 28. I^2S-Justified Mode

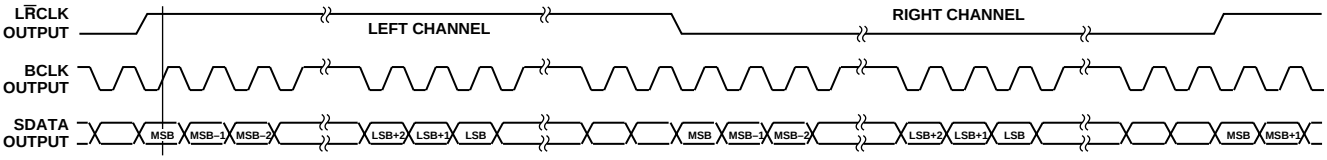

Figure 29. Left-Justified Mode

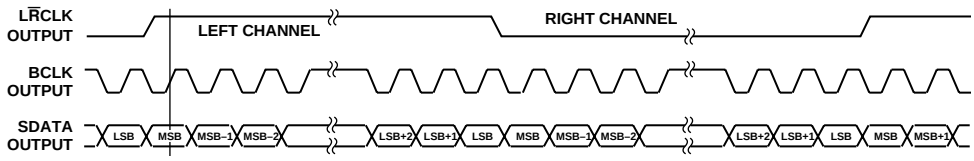

Figure 30. 32 × F_S Packed Mode

Note that in 16-bit output mode, the AD1892 is capable of a 32 × F_{SOUT} BCLK frequency "packed mode" where the MSB is left-justified to an LRCLK transition, and the LSB is right-justified to an LRCLK transition. LRCLK is HI for the left channel and LO for the right channel. Data is valid on the rising edge of BCLK. Packed mode can be used when the AD1892 is programmed in either right-justified or left-justified mode. Packed mode is shown in Figure 30.

ASRC Bypass Mode

By setting bit D0 HI in Control Register 1, the AD1892 will be placed in "bypass mode," where the received biphase-mark encoded data is transmitted out of serial output interface without any sample rate conversion applied. This mode may be useful in applications where the audio data is not simple PCM information; for example, the data may be compressed using the MPEG or Dolby AC-3 compression standards. In this mode, the output interface runs in master mode (LRCLK and BCLK are outputs), and all three output format modes are available (left-justified, I^2S-justified and right-justified). In bypass mode, without an external PLL, jitter may be as high as one MCLK period. In bypass mode, the output sample frequency (LRCLK frequency) is simply the incoming biphase-mark sample frequency. The BCLK frequency can be set to 32 × F_{SIN} or 64 × F_{SIN} (default) using Bit D1 in Control Register 1.

Power-Down and Reset

The AD1892 offers two methods of initiating power-down/reset: through an input pin ($\overline{PD/RST}$, Pin 1) and through a control register bit (Control Register 0, Bit D0). When the $\overline{PD/RST}$ pin is held low, the AD1892 is placed in a "hardware" low dissipation power-down state with the on-chip clocks stopped. When the $\overline{PD/RST}$ input is asserted HI, the AD1892 is reset. The two control registers in the serial control port are initialized to their default values. All other on-chip registers are zeroed, including those in the rate converter, the serial data output port, the status registers, the Channel Status, and Q-Channel subcode registers. The AD1892 enters the default mode and is ready for normal operation. The master clock (MCLK, Pin 28) must be running for a successful hardware reset or power-down operation to occur. The $\overline{PD/RST}$ signal must be LO for a minimum of four master clock periods (≈160 ns with a 24.576 MHz MCLK frequency).

"Software" power-down is activated by writing 1 to bit D0 in Control Register 0. The effect is the same as hardware power-down/reset, except the clocks to the SPI serial control port are not stopped, so that the AD1892 may be put back into normal operation.

Multiple AD1892 Synchronization

Two methods can be used to synchronize the outputs of multiple AD1892s.

It is possible to synchronize the outputs of multiple AD1892s in a system by issuing them $\overline{PD/RST}$ signals which are synchronous with the MCLK signal. This scheme is illustrated in Figure 31.

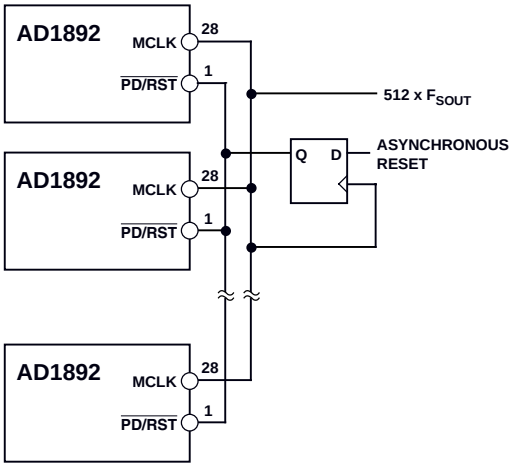

Figure 31. Multiple AD1892 Synchronization

The second method involves using the SYNC input. A falling edge on the SYNC input resets output timing counters within the AD1892. See Figure 41 for timing. Note that the SYNC signal MUST be divided down from the 512 × F_{SOUT} MCLK signal applied to the AD1892. If SYNC is properly set up to MCLK, the current LRCLK and BCLK timing will be interrupted, and the left/right channel sample pair will be invalid. However, the second and subsequent left/right sample pairs will have valid data and normally timed bit and left/right clocks. If the AD1892 is configured for a 64 × F_{SOUT} bit clock frequency (default), the LRCLK output (on the second and subsequent output periods) will fall immediately after SYNC falls (i.e., on the next MCLK falling edge). The SYNC input to the AD1892 can be used externally as the system LRCLK clock (or word clock) when the AD1892 is configured in 64 × F_{SOUT} bit clock mode. When the AD1892 is configured in 32 × F_{SOUT} bit clock mode, LRCLK falls several MCLK falling edges later, and the SYNC input cannot be used as the external LRCLK signal directly. Note that Figure 41 shows the 64 × F_{SOUT} bit clock mode only. Figure 32 shows several AD1892s synchronized using the SYNC input. SYNC input synchronization is not available when the AD1892 is used in bypass mode.

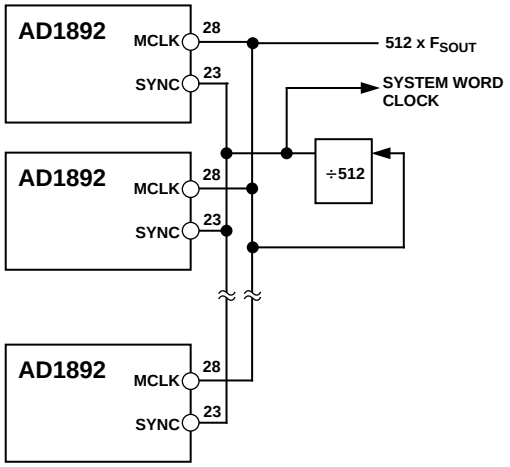

Figure 32. Multiple AD1892 Synchronization Using SYNC

Mute

The AD1892 offers two methods of muting the digital audio output. There is an external mute input (MUTE, Pin 27) that "hardware" mutes the AD1892 digital audio output when asserted HI. This input should be LO for normal operation. The AD1892 digital audio output can also be "software" muted through a write to Control Register 1, position D7. Writing a 1 mutes the digital audio output; writing a 0 (default) unmutes the output.

The AD1892 mutes the digital audio output automatically when the digital audio receiver is not locked to the incoming biphase mark encoded stream, or when no biphase-mark signal is applied to the input of the AD1892 (i.e., NOSIG = 1). When NOSIG is deasserted (LO), the digital audio output from the AD1892 is immediately unmuted. The AD1892 automatically repeats the last valid sample when a parity error or validity error is encountered.

APPLICATIONS CIRCUITS

A typical microcontroller-oriented application circuit for the AD1892 is shown in Figure 33.

A typical stand-alone application circuit for the AD1892 is shown in Figure 34.

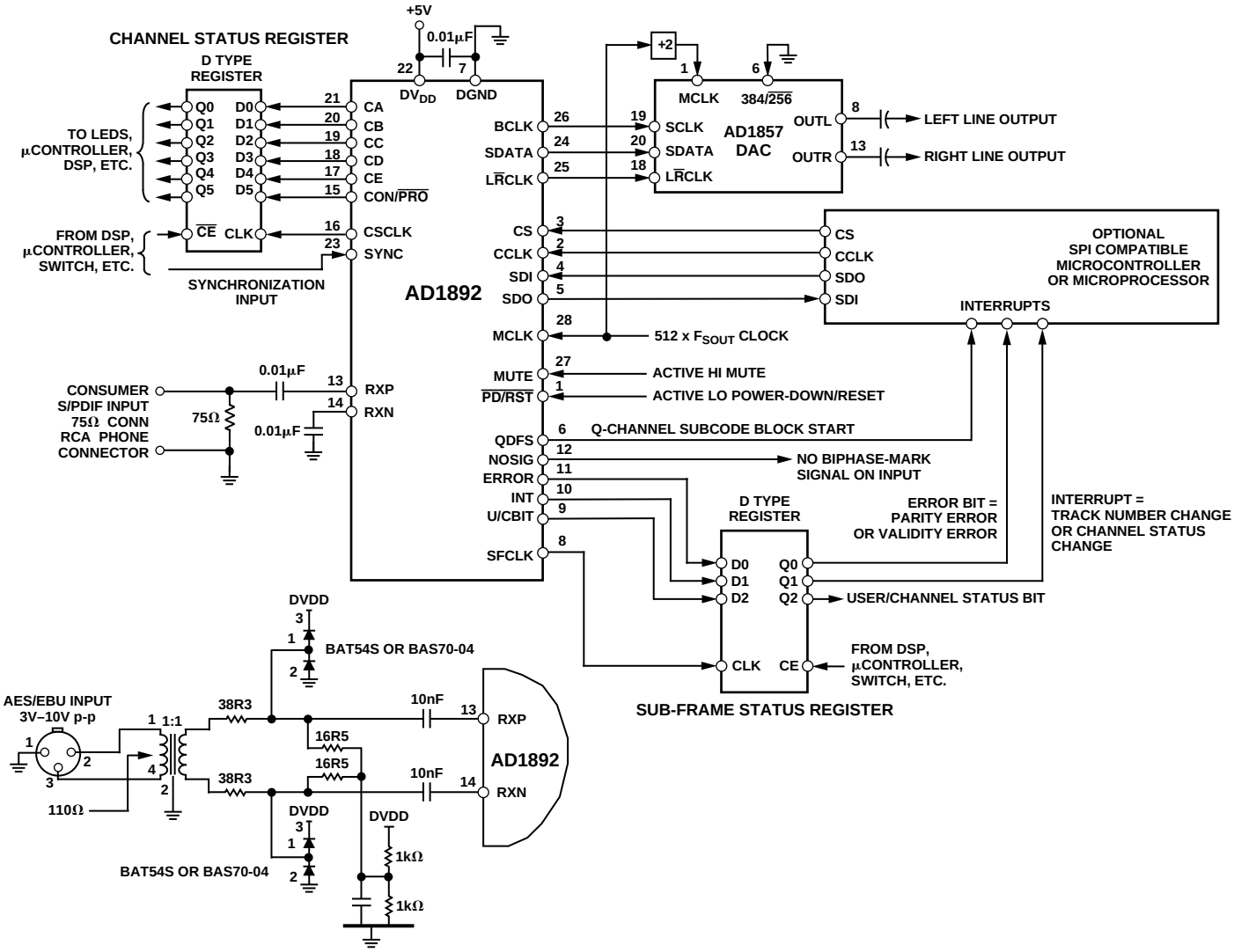

Figure 33. Microcontroller Application Circuit

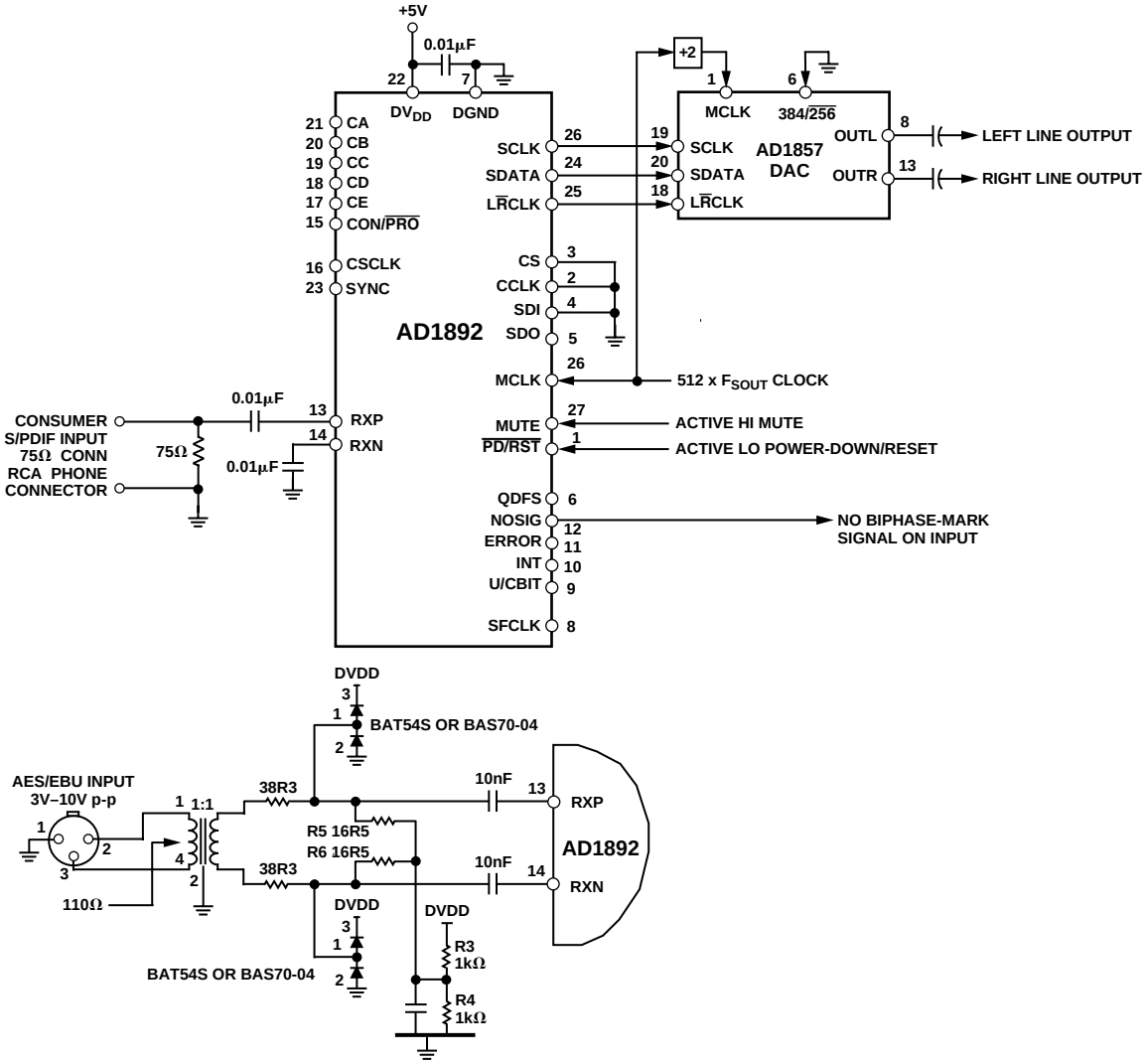

Figure 34. Stand-Alone Application Circuit

Dither
The AD1892 can be programmed to add triangular Probability Distribution Function (PDF) dither to the digital audio samples. It is advisable to add dither when the input word width exceeds the output word width, e.g., the input word is 20 bits and the output word is 16 bits. Triangular PDF is generally considered to create the most favorable noise shaping of the residual quantization noise. The AD1892's dither function is always available, even when the part is configured in bypass mode.

Asynchronous Sample Rate Converter
The AD1892 uses a different Asynchronous Sample Rate Conversion (ASRC) algorithm than the AD1890/AD1891/AD1893. The upsampling range is much wider (1:5, from 10 kHz to 48 kHz continuous), but the downsampling range is more constrained (48 kHz down to 44.1 kHz, without significant artifacts). Unlike the AD1890/AD1891/AD1893, the AD1892's rate converter does not include automatic input frequency band-limiting, which places constraints on artifact-free downsampling. Program material sampled at 48 kHz can theoretically have frequency content up to 24 kHz; when this is downsampled to 44.1 kHz, there can be aliased spectral energy from 20.1 kHz to 24.1 kHz, which is not fully attenuated by the AD1892's digital filter. For example, a full-scale 24 kHz signal would be attenuated by –6 dB when resampled to 44.1 kHz.

The AD1892 ASRC performs 128 times interpolation, low-pass filtering, and resampling (decimation) at the MCLK/512 (i.e., F_{SOUT}) rate. The digital filter passband ripple is ±0.015 dB, and the transition band extends from 20 kHz to 24.1 kHz. The stopband attenuation is 120 dB.

DAT Start ID
The AD1892 status register provides a bit that is intended to be used in Digital Audio Tape (DAT) systems to facilitate the location of the beginning of tracks. In DAT systems, when the category code is set to DAT (i.e., 1100000) and the first right subframe user bit in a DAT frame (identified as "R0" in the IEC-958 documents) is set to 1, this is an indication of the start of a new track. The AD1892 will set Bit D7 in Status Register 1 HI when the category code is 1100000 and any received right channel subframe user bit is 1. This bit is sticky and will stay set until Status Register 1 is read.

Coding Violation Status Bit
The AD1892 includes a bit (D0 in Status Register 0) that is set HI when the AD1892 encounters biphase-mark encoding error, other than X, Y or Z preambles, in the input serial stream. This bit is sticky and will stay set until Status Register 0 is read. This bit can be used to monitor the integrity of the biphase-mark interconnect feeding the AD1892.

Q-Channel Block Start Status Bit and QDFS Signal
The AD1892 provides two indications that a Q-Channel subcode block start has been encountered in consumer mode. There is a bit (D5 in Status Register 1) that is set HI after the subcode synchronization word (S0 + S1) has been received. This bit is sticky and will stay set until Status Register 1 is read. There is also an output signal QDFS (Pin 6) that is asserted when the subcode sync word has been received. QDFS goes HI for one subframe period.

Word Width
The AD1892 can use up to 20 bits of incoming audio data, i.e., all of the bits from Bit 8 through Bit 27 in each subframe. The serial digital audio standards allow the use of the so-called "Aux Data" bits to extend the audio data word length to 24 bits; however, the AD1892 does not support this word length extension.

Mono Output Control Register Option
A monaural (mono) output can be provided by the AD1892 using the mono mode Bit D6 in Control Register 1. When this bit is set to 1, the AD1892 puts (Right Channel + Left Channel)/2 on both the left and right channel serial data output. Adding both channels together and dividing by 2 has the effect of lowering the perceived amplitude of resulting output for largely uncorrelated right and left channel input material, but also avoids the possibility of clipping with highly correlated right and left channel input material.

Microcontroller Applications
In many systems, the AD1892 will be used with an external microcontroller to enable the more sophisticated functions of which the device is capable. The microcontroller servicing the AD1892 should follow the following suggestions:

1. The microcontroller should read (and thereby clear) the status registers after initial start-up. The microcontroller should wait until the NOSIG pin is deasserted LO before clearing Status Register 0 and 1. This procedure will avoid the problems of invalid channel status and Q-Channel subcode CRC errors, invalid parity and validity errors, invalid coding violations errors, etc. All other status bits are invalid when No Phase Lock (Bit D7, Status Register 0) is 1 (no phase lock), so all errors should be ignored by the microcontroller until this bit is deasserted LO.
2. The Q-Channel subcode CRC error indication (Bit D6, Status Register 1) is not valid until subcode sync is achieved. Subcode sync is indicated when Q Channel Block Start (Bit D5, Status Register 1) is 1 or when the QDFS signal (Pin 6) is asserted HI.
3. The AD1892 updates its on-chip channel status buffer and Q Channel subcode buffer regardless of whether or not CRC errors are detected. The system engineer must decide if the microcontroller should update its information (i.e., read the AD1892 status buffers) when channel status CRC errors occur in professional mode or when Q Channel subcode CRC errors occur in consumer mode.

TIMING DIAGRAMS

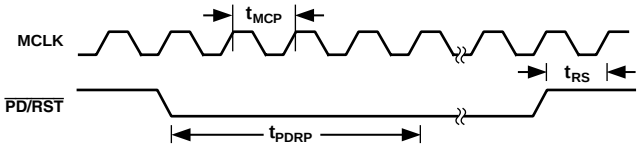

Figure 35. MCLK and Power-Down/Reset Timing

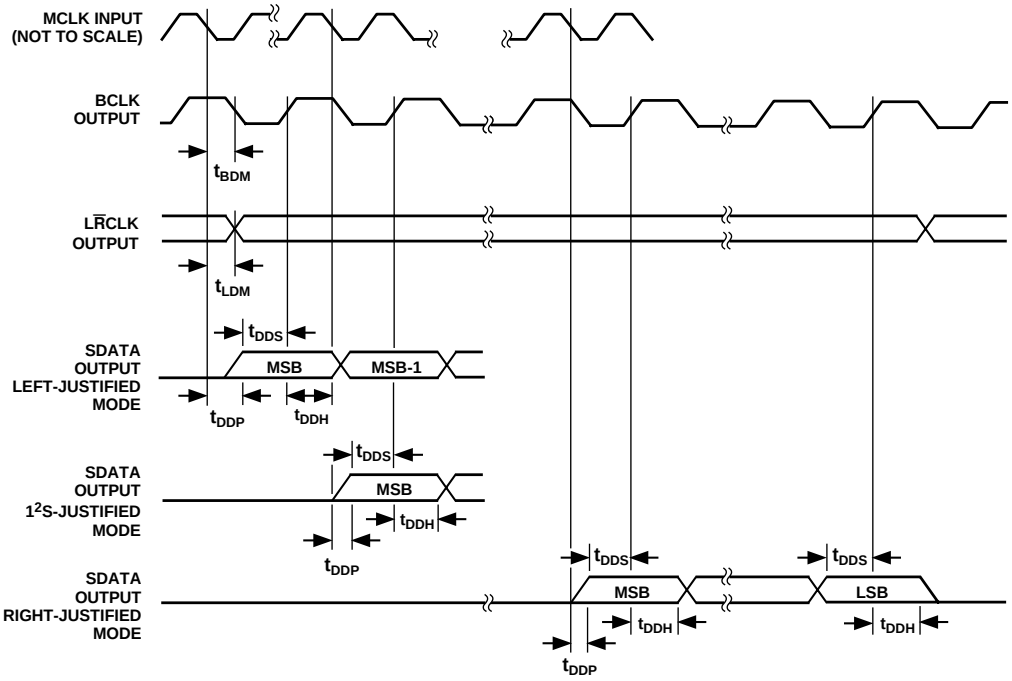

Figure 36. Serial Data Output Port Timing

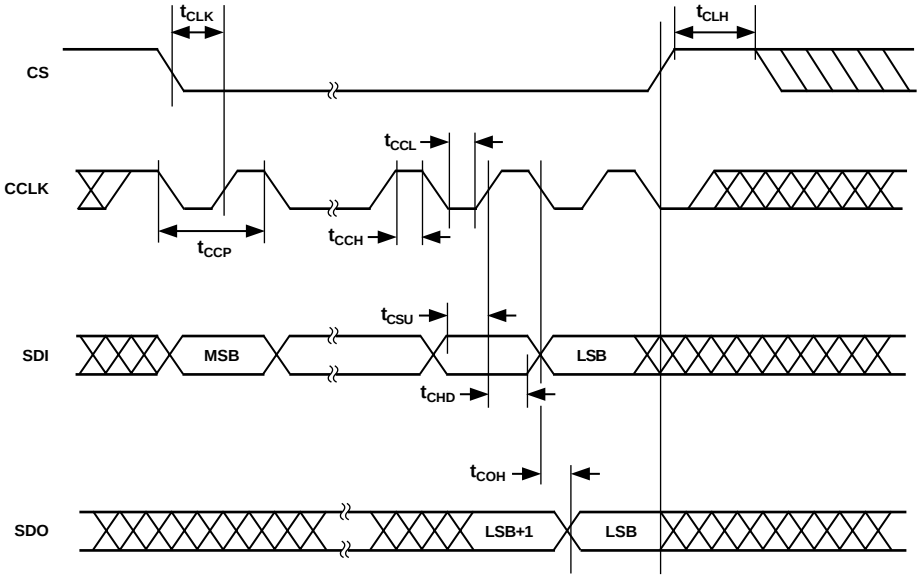

Figure 37. Serial Control Port Timing

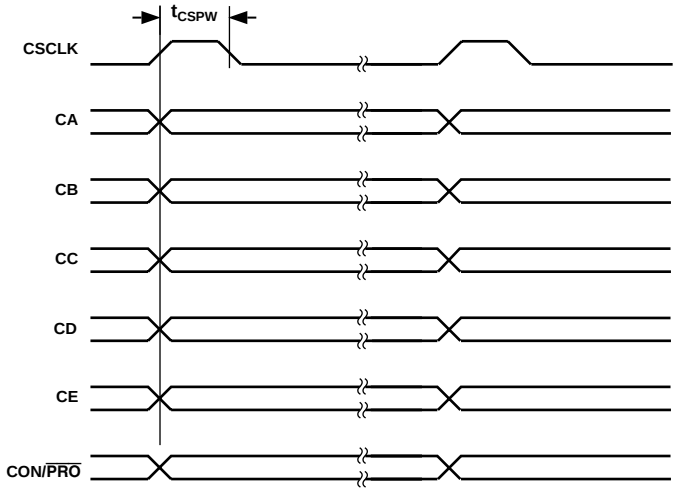

Figure 38. Channel Status and Clock Timing

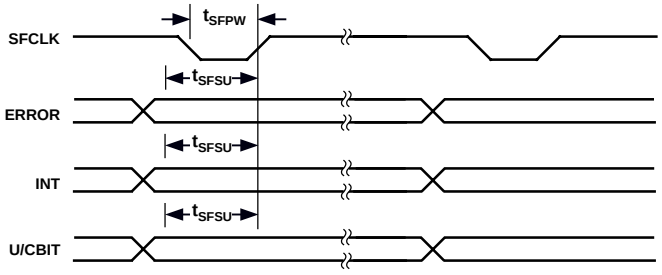

Figure 39. Subframe Status and Clock Timing

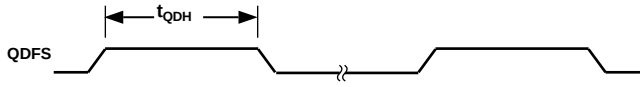

Figure 40. Q-Channel Subcode Clock Timing

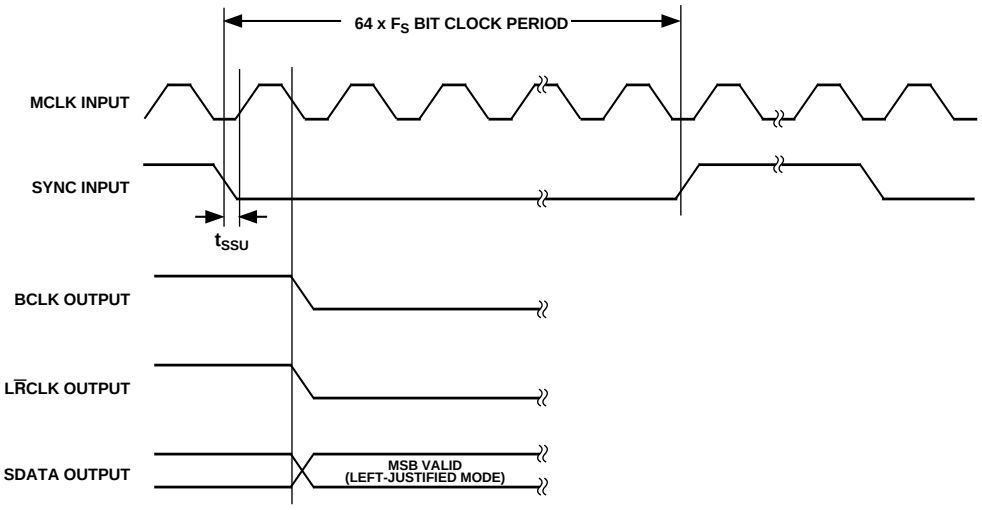

NOTE:
THIS DIAGRAM SHOWS SECOND AND SUBSEQUENT SYNC INPUT SYNCHRONIZED OUTPUT CLOCK AND DATA TIMING PERIODS. THE CLOCKS AND DATA ASSOCIATED WITH THE FIRST SYNC INPUT SYNCHRONIZED PERIOD ARE NOT VALID. SEE TEXT FOR MORE DETAILS.

Figure 41. SYNC Input Timing

Typical Performance Plots

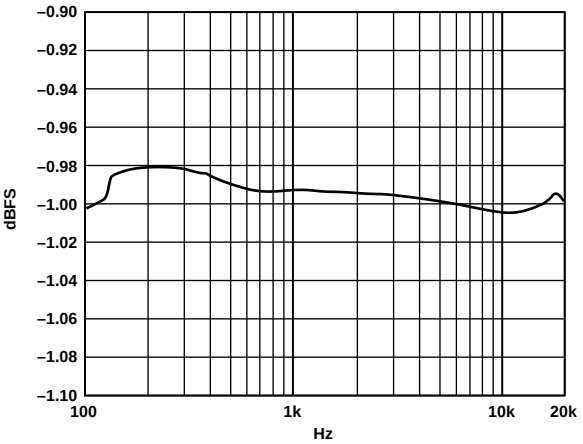

Figure 42. Frequency Response, –1 dB Full-Scale Input

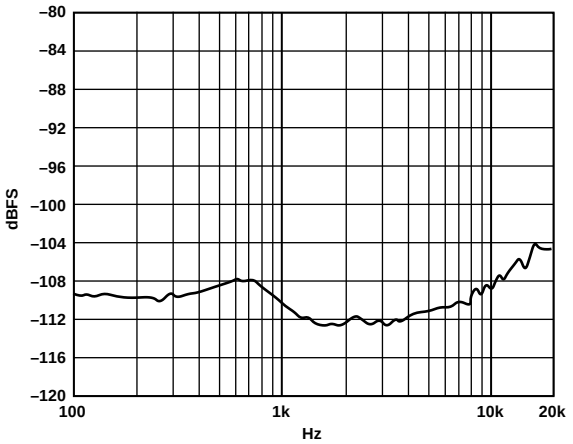

Figure 44. THD+N, 32 kHz Input, 48 kHz Output, –1 dB Full-Scale Input

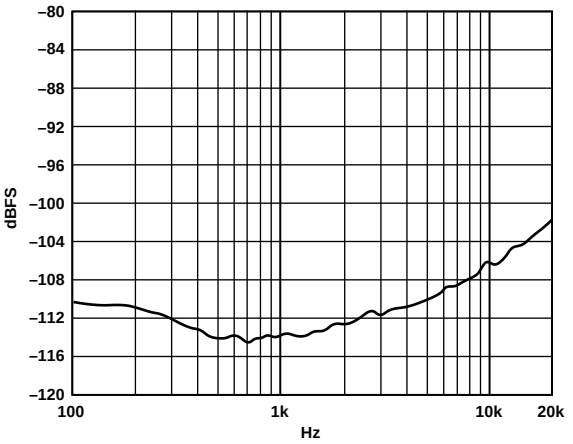

Figure 43. THD+N, 44.1 kHz Input, 48 kHz Output, –1 dB Full-Scale Input

C2931–8–7/98

OUTLINE DIMENSIONS

Dimensions shown in inches and (mm).

28-Lead SOIC (R-28)

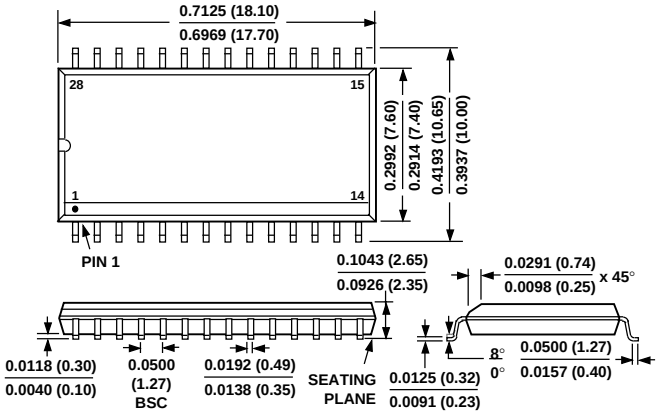

PRINTED IN U.S.A.

Компания «ЭлектроПласт» предлагает заключение долгосрочных отношений при поставках импортных электронных компонентов на взаимовыгодных условиях!

Наши преимущества:

- Оперативные поставки широкого спектра электронных компонентов отечественного и импортного производства напрямую от производителей и с крупнейших мировых складов;
- Поставка более 17-ти миллионов наименований электронных компонентов;
- Поставка сложных, дефицитных, либо снятых с производства позиций;
- Оперативные сроки поставки под заказ (от 5 рабочих дней);
- Экспресс доставка в любую точку России;
- Техническая поддержка проекта, помощь в подборе аналогов, поставка прототипов;
- Система менеджмента качества сертифицирована по Международному стандарту ISO 9001;
- Лицензия ФСБ на осуществление работ с использованием сведений, составляющих государственную тайну;
- Поставка специализированных компонентов (Xilinx, Altera, Analog Devices, Intersil, Interpoint, Microsemi, Aeroflex, Peregrine, Syfer, Eurofarad, Texas Instrument, Miteq, Cobham, E2V, MA-COM, Hittite, Mini-Circuits,General Dynamics и др.);

Помимо этого, одним из направлений компании «ЭлектроПласт» является направление «Источники питания». Мы предлагаем Вам помощь Конструкторского отдела:

- Подбор оптимального решения, техническое обоснование при выборе компонента;
- Подбор аналогов;
- Консультации по применению компонента;
- Поставка образцов и прототипов;
- Техническая поддержка проекта;
- Защита от снятия компонента с производства.

Как с нами связаться

Телефон: 8 (812) 309 58 32 (многоканальный)
Факс: 8 (812) 320-02-42
Электронная почта: org@eplast1.ru
Адрес: 198099, г. Санкт-Петербург, ул. Калинина, дом 2, корпус 4, литера А.