74HC154; 74HCT154

4-to-16 line decoder/demultiplexer

Rev. 06 — 12 February 2007 Product data sheet

1. General description

The 74HC154; 74HCT154 is a high-speed Si-gate CMOS device and is pin compatible with Low-power Schottky TTL (LSTTL).

The 74HC154; 74HCT154 decoders accept four active HIGH binary address inputs and provide 16 mutually-exclusive active LOW outputs. The two-input enable gate can be used to strobe the decoder to eliminate the normal decoding 'glitches' on the outputs, or can be used for the expansion of the decoder.

The enable gate has two ANDed inputs which must be LOW to enable the outputs.

The 74HC154; 74HCT154 can be used as a 1-to-16 demultiplexer by using one of the enable inputs as the multiplexed data input.

When the other enable input is LOW, the addressed output will follow the state of the applied data.

2. Features

- 16-line demultiplexing capability
- Decodes 4 binary-coded inputs into 16 mutually-exclusive outputs
- Complies with JEDEC standard no. 7A
- Specified from –40 °C to +85 °C and –40 °C to +125 °C
- ESD protection:
  - HBM EIA/JESD22-A114D exceeds 2000 V
  - MM EIA/JESD22-A115-A exceeds 200 V

3. Ordering information

Table 1. Ordering information

Type number	Package			
	Temperature range	Name	Description	Version
74HC154				
74HC154N	–40 °C to +125 °C	DIP24	plastic dual in-line package; 24 leads (600 mil)	SOT101-1
74HC154D	–40 °C to +125 °C	SO24	plastic small outline package; 24 leads; body width 7.5 mm	SOT137-1
74HC154DB	–40 °C to +125 °C	SSOP24	plastic shrink small outline package; 24 leads; body width 5.3 mm	SOT340-1
74HC154PW	–40 °C to +125 °C	TSSOP24	plastic thin shrink small outline package; 24 leads; body width 4.4 mm	SOT355-1

founded by Philips

Table 1. Ordering information *...continued*

Type number	Package			
	Temperature range	Name	Description	Version
74HC154BQ	–40 °C to +125 °C	DHVQFN24	plastic dual in-line compatible thermal enhanced very thin quad flat package; no leads; 24 terminals; body 3.5 × 5.5 × 0.85 mm	SOT815-1
74HCT154				
74HCT154N	–40 °C to +125 °C	DIP24	plastic dual in-line package; 24 leads (600 mil)	SOT101-1
74HCT154D	–40 °C to +125 °C	SO24	plastic small outline package; 24 leads; body width 7.5 mm	SOT137-1
74HCT154DB	–40 °C to +125 °C	SSOP24	plastic shrink small outline package; 24 leads; body width 5.3 mm	SOT340-1
74HCT154PW	–40 °C to +125 °C	TSSOP24	plastic thin shrink small outline package; 24 leads; body width 4.4 mm	SOT355-1
74HCT154BQ	–40 °C to +125 °C	DHVQFN24	plastic dual in-line compatible thermal enhanced very thin quad flat package; no leads; 24 terminals; body 3.5 × 5.5 × 0.85 mm	SOT815-1

4. Functional diagram

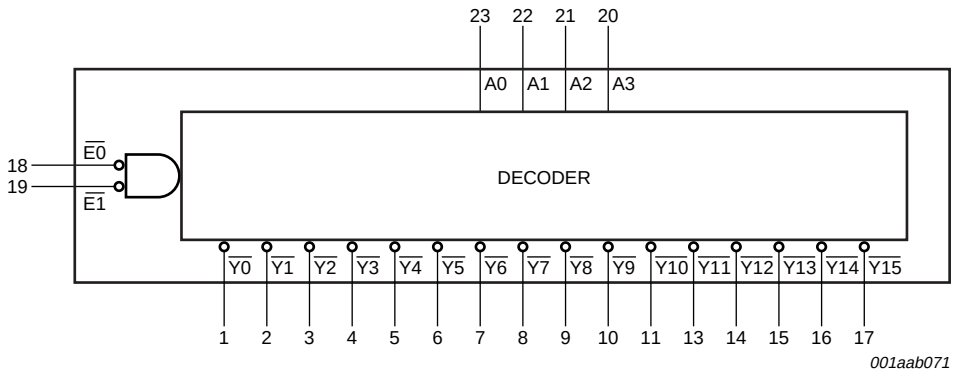

Fig 1. Functional diagram

© NXP B.V. 2007. All rights reserved.

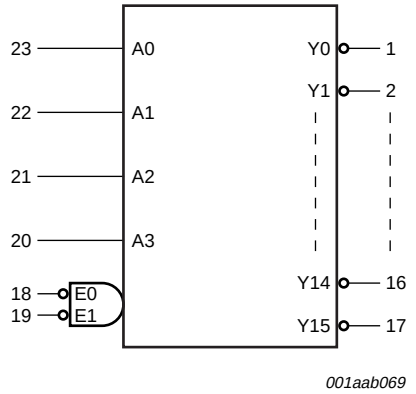

Fig 2. Logic symbol

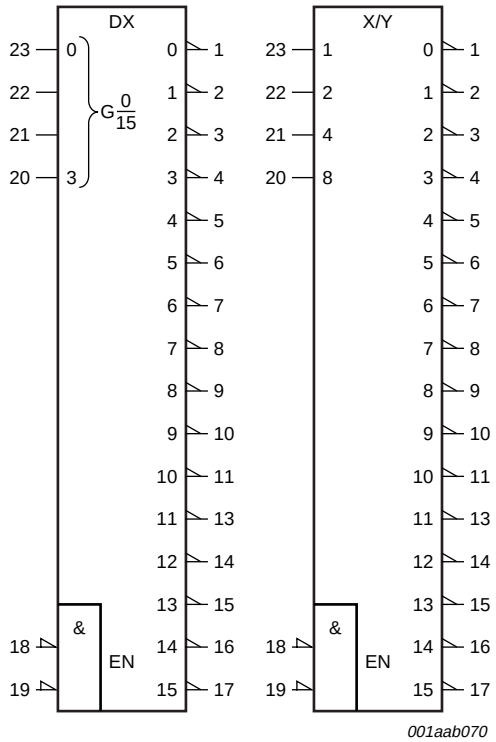

Fig 3. IEC logic symbol

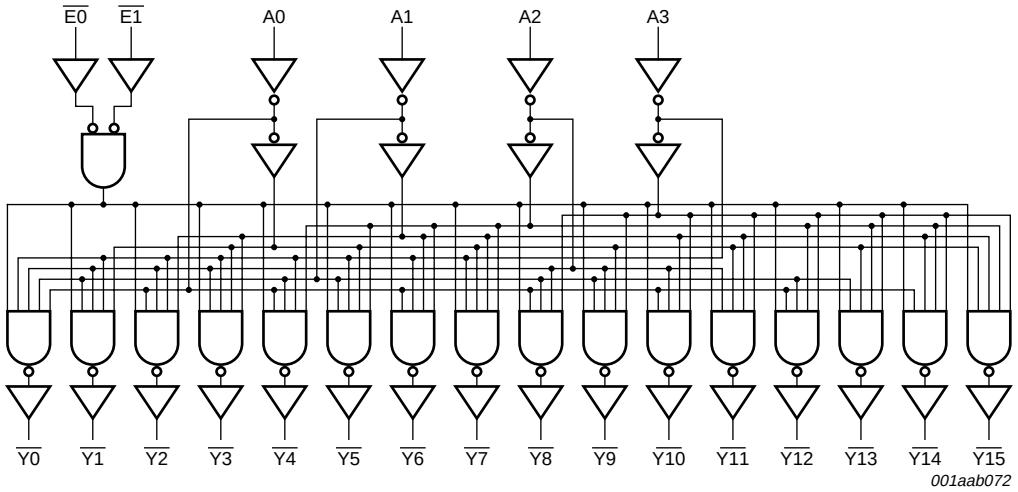

Fig 4. Logic diagram

© NXP B.V. 2007. All rights reserved.

5. Pinning information

5.1 Pinning

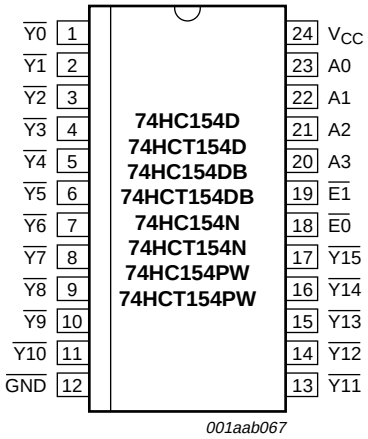

Fig 5. Pin configuration for SO24, DIP24, SSOP24 and TSSOP24

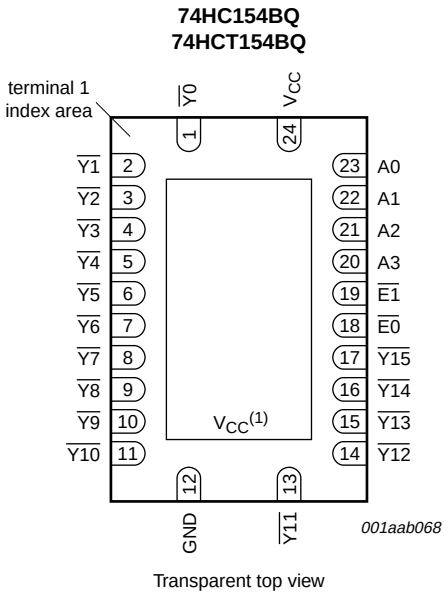

(1) The die substrate is attached to this pad using conductive die attach material. It cannot be used as a supply pin or input.

Fig 6. Pin configuration for DHVQFN24

5.2 Pin description

Table 2. Pin description

Symbol	Pin	Description
$\overline{Y0}$	1	data output (active LOW)
$\overline{Y1}$	2	data output (active LOW)
$\overline{Y2}$	3	data output (active LOW)
$\overline{Y3}$	4	data output (active LOW)
$\overline{Y4}$	5	data output (active LOW)
$\overline{Y5}$	6	data output (active LOW)
$\overline{Y6}$	7	data output (active LOW)
$\overline{Y7}$	8	data output (active LOW)
$\overline{Y8}$	9	data output (active LOW)
$\overline{Y9}$	10	data output (active LOW)
$\overline{Y10}$	11	data output (active LOW)
GND	12	ground (0 V)
$\overline{Y11}$	13	data output (active LOW)
$\overline{Y12}$	14	data output (active LOW)

© NXP B.V. 2007. All rights reserved.

Table 2. Pin description *...continued*

Symbol	Pin	Description
$\overline{Y13}$	15	data output (active LOW)
$\overline{Y14}$	16	data output (active LOW)
$\overline{Y15}$	17	data output (active LOW)
$\overline{E0}$	18	enable input (active LOW)
$\overline{E1}$	19	enable input (active LOW)
A3	20	address input
A2	21	address input
A1	22	address input
A0	23	address input
V_{CC}	24	supply voltage

6. Functional description

Table 3. Function table[1]

Input						Output															
$\overline{E0}$	$\overline{E1}$	A0	A1	A2	A3	$\overline{Y0}$	$\overline{Y1}$	$\overline{Y2}$	$\overline{Y3}$	$\overline{Y4}$	$\overline{Y5}$	$\overline{Y6}$	$\overline{Y7}$	$\overline{Y8}$	$\overline{Y9}$	$\overline{Y10}$	$\overline{Y11}$	$\overline{Y12}$	$\overline{Y13}$	$\overline{Y14}$	$\overline{Y15}$
H	H	X	X	X	X	H	H	H	H	H	H	H	H	H	H	H	H	H	H	H	H
H	L	X	X	X	X	H	H	H	H	H	H	H	H	H	H	H	H	H	H	H	H
L	H	X	X	X	X	H	H	H	H	H	H	H	H	H	H	H	H	H	H	H	H
L	L	L	L	L	L	L	H	H	H	H	H	H	H	H	H	H	H	H	H	H	H
		H	L	L	L	H	L	H	H	H	H	H	H	H	H	H	H	H	H	H	H
		L	H	L	L	H	H	L	H	H	H	H	H	H	H	H	H	H	H	H	H
		H	H	L	L	H	H	H	L	H	H	H	H	H	H	H	H	H	H	H	H
		L	L	H	L	H	H	H	H	L	H	H	H	H	H	H	H	H	H	H	H
		H	L	H	L	H	H	H	H	H	L	H	H	H	H	H	H	H	H	H	H
		L	H	H	L	H	H	H	H	H	H	L	H	H	H	H	H	H	H	H	H
		H	H	H	L	H	H	H	H	H	H	H	L	H	H	H	H	H	H	H	H
		L	L	L	H	H	H	H	H	H	H	H	H	L	H	H	H	H	H	H	H
		H	L	L	H	H	H	H	H	H	H	H	H	H	L	H	H	H	H	H	H
		L	H	L	H	H	H	H	H	H	H	H	H	H	H	L	H	H	H	H	H
		H	H	L	H	H	H	H	H	H	H	H	H	H	H	H	L	H	H	H	H
		L	L	H	H	H	H	H	H	H	H	H	H	H	H	H	H	L	H	H	H
		H	L	H	H	H	H	H	H	H	H	H	H	H	H	H	H	H	L	H	H
		L	H	H	H	H	H	H	H	H	H	H	H	H	H	H	H	H	H	L	H
		H	H	H	H	H	H	H	H	H	H	H	H	H	H	H	H	H	H	H	L

[1] H = HIGH voltage level
L = LOW voltage level
X = don't care.

© NXP B.V. 2007. All rights reserved.

7. Limiting values

Table 4. Limiting values

In accordance with the Absolute Maximum Rating System (IEC 60134). Voltages are referenced to GND (ground = 0 V).

Symbol	Parameter	Conditions		Min	Max	Unit
V_{CC}	supply voltage			–0.5	+7.0	V
I_{IK}	input clamping current	V_I < –0.5 V or V_I > V_{CC} + 0.5 V	[1]	-	±20	mA
I_{OK}	output clamping current	V_O < –0.5 V or V_O > V_{CC} + 0.5 V	[1]	-	±20	mA
I_O	output current	–0.5 V < V_O < V_{CC} + 0.5 V	[1]	-	±25	mA
I_{CC}	supply current		[1]	-	50	mA
I_{GND}	ground current		[1]	-	–50	mA
T_{stg}	storage temperature			–65	+150	°C
P_{tot}	total power dissipation	T_{amb} = –40 °C to +125 °C	[2]	-	300	mW

[1] The input and output voltage ratings may be exceeded if the input and output current ratings are observed.

[2] For DIP24 packages: P_{tot} derates linearly at 12 mW/K above 70 °C.
For SO24 packages: P_{tot} derates linearly at 8 mW/K above 70 °C.
For SSOP24 and TSSOP24 packages: P_{tot} derates linearly at 5.5 mW/K above 60 °C.
For DHVQFN24 packages: P_{tot} derates linearly at 4.5 mW/K above 60 °C.

8. Recommended operating conditions

Table 5. Operating conditions

Symbol	Parameter	Conditions	Min	Typ	Max	Unit
74HC154						
V_{CC}	supply voltage		2.0	5.0	6.0	V
V_I	input voltage		0	-	V_{CC}	V
V_O	output voltage		0	-	V_{CC}	V
T_{amb}	ambient temperature		–40	+25	+125	°C
t_r	rise time	V_{CC} = 2.0 V	-	-	1000	ns
		V_{CC} = 4.5 V	-	6.0	500	ns
		V_{CC} = 6.0 V	-	-	400	ns
t_f	fall time	V_{CC} = 2.0 V	-	-	1000	ns
		V_{CC} = 4.5 V	-	6.0	500	ns
		V_{CC} = 6.0 V	-	-	400	ns
74HCT154						
V_{CC}	supply voltage		4.5	5.0	5.5	V
V_I	input voltage		0	-	V_{CC}	V
V_O	output voltage		0	-	V_{CC}	V
T_{amb}	ambient temperature		–40	+25	+125	°C
t_r	input rise time	V_{CC} = 4.5 V	-	6.0	500	ns
t_f	input fall time	V_{CC} = 4.5 V	-	6.0	500	ns

© NXP B.V. 2007. All rights reserved.

9. Static characteristics

Table 6. Static characteristics 74HC154

At recommended operating conditions; voltages are referenced to GND (ground = 0 V).

Symbol	Parameter	Conditions	Min	Typ	Max	Unit
T_{amb} = 25 °C						
V_{IH}	HIGH-level input voltage	V_{CC} = 2.0 V	1.5	1.2	-	V
		V_{CC} = 4.5 V	3.15	2.4	-	V
		V_{CC} = 6.0 V	4.2	3.2	-	V
V_{IL}	LOW-level input voltage	V_{CC} = 2.0 V	-	0.8	0.5	V
		V_{CC} = 4.5 V	-	2.1	1.35	V
		V_{CC} = 6.0 V	-	2.8	1.8	V
V_{OH}	HIGH-level output voltage	$V_I = V_{IH}$ or V_{IL}				
		V_{CC} = 2.0 V; I_O = –20 μA	1.9	2.0	-	V
		V_{CC} = 4.5 V; I_O = –20 μA	4.4	4.5	-	V
		V_{CC} = 6.0 V; I_O = –20 μA	5.9	6.0	-	V
		V_{CC} = 4.5 V; I_O = –4.0 mA	3.98	4.32	-	V
		V_{CC} = 6.0 V; I_O = –5.2 mA	5.48	5.81	-	V
V_{OL}	LOW-level output voltage	$V_I = V_{IH}$ or V_{IL}				
		V_{CC} = 2.0 V; I_O = 20 μA	-	0	0.1	V
		V_{CC} = 4.5 V; I_O = 20 μA	-	0	0.1	V
		V_{CC} = 6.0 V; I_O = 20 μA	-	0	0.1	V
		V_{CC} = 4.5 V; I_O = 4.0 mA	-	0.15	0.26	V
		V_{CC} = 6.0 V; I_O = 5.2 mA	-	0.16	0.26	V
I_I	input leakage current	V_{CC} = 6.0 V; $V_I = V_{CC}$ or GND	-	-	±0.1	μA
I_{CC}	supply current	V_{CC} = 6.0 V; $V_I = V_{CC}$ or GND; I_O = 0 A	-	-	8.0	μA
C_I	input capacitance		-	3.5	-	pF
T_{amb} = –40 °C to +85 °C						
V_{IH}	HIGH-level input voltage	V_{CC} = 2.0 V	1.5	-	-	V
		V_{CC} = 4.5 V	3.15	-	-	V
		V_{CC} = 6.0 V	4.2	-	-	V
V_{IL}	LOW-level input voltage	V_{CC} = 2.0 V	-	-	0.5	V
		V_{CC} = 4.5 V	-	-	1.35	V
		V_{CC} = 6.0 V	-	-	1.8	V
V_{OH}	HIGH-level output voltage	$V_I = V_{IH}$ or V_{IL}				
		V_{CC} = 2.0 V; I_O = –20 μA	1.9	-	-	V
		V_{CC} = 4.5 V; I_O = –20 μA	4.4	-	-	V
		V_{CC} = 6.0 V; I_O = –20 μA	5.9	-	-	V
		V_{CC} = 4.5 V; I_O = –4.0 mA	3.84	-	-	V
		V_{CC} = 6.0 V; I_O = –5.2 mA	5.34	-	-	V

© NXP B.V. 2007. All rights reserved.

Table 6. Static characteristics 74HC154 *...continued*

At recommended operating conditions; voltages are referenced to GND (ground = 0 V).

Symbol	Parameter	Conditions	Min	Typ	Max	Unit
V_{OL}	LOW-level output voltage	$V_I = V_{IH}$ or V_{IL}				
		V_{CC} = 2.0 V; I_O = 20 μA	-	-	0.1	V
		V_{CC} = 4.5 V; I_O = 20 μA	-	-	0.1	V
		V_{CC} = 6.0 V; I_O = 20 μA	-	-	0.1	V
		V_{CC} = 4.5 V; I_O = 4.0 mA	-	-	0.33	V
		V_{CC} = 6.0 V; I_O = 5.2 mA	-	-	0.33	V
I_I	input leakage current	V_{CC} = 6.0 V; $V_I = V_{CC}$ or GND	-	-	±1.0	μA
I_{CC}	supply current	V_{CC} = 6.0 V; $V_I = V_{CC}$ or GND; I_O = 0 A	-	-	80	μA
T_{amb} = −40 °C to +125 °C						
V_{IH}	HIGH-level input voltage	V_{CC} = 2.0 V	1.5	-	-	V
		V_{CC} = 4.5 V	3.15	-	-	V
		V_{CC} = 6.0 V	4.2	-	-	V
V_{IL}	LOW-level input voltage	V_{CC} = 2.0 V	-	-	0.5	V
		V_{CC} = 4.5 V	-	-	1.35	V
		V_{CC} = 6.0 V	-	-	1.8	V
V_{OH}	HIGH-level output voltage	$V_I = V_{IH}$ or V_{IL}				
		V_{CC} = 2.0 V; I_O = −20 μA	1.9	-	-	V
		V_{CC} = 4.5 V; I_O = −20 μA	4.4	-	-	V
		V_{CC} = 6.0 V; I_O = −20 μA	5.9	-	-	V
		V_{CC} = 4.5 V; I_O = −4.0 mA	3.7	-	-	V
		V_{CC} = 6.0 V; I_O = −5.2 mA	5.2	-	-	V
V_{OL}	LOW-level output voltage	$V_I = V_{IH}$ or V_{IL}				
		V_{CC} = 2.0 V; I_O = 20 μA	-	-	0.1	V
		V_{CC} = 4.5 V; I_O = 20 μA	-	-	0.1	V
		V_{CC} = 6.0 V; I_O = 20 μA	-	-	0.1	V
		V_{CC} = 4.5 V; I_O = 4.0 mA	-	-	0.4	V
		V_{CC} = 6.0 V; I_O = 5.2 mA	-	-	0.4	V
I_I	input leakage current	V_{CC} = 6.0 V; $V_I = V_{CC}$ or GND	-	-	±0.1	μA
I_{CC}	supply current	V_{CC} = 6.0 V; $V_I = V_{CC}$ or GND; I_O = 0 A	-	-	160	μA

Table 7. Static characteristics 74HCT154

At recommended operating conditions; voltages are referenced to GND (ground = 0 V).

Symbol	Parameter	Conditions	Min	Typ	Max	Unit
T_{amb} = 25 °C						
V_{IH}	HIGH-level input voltage	V_{CC} = 4.5 V to 5.5 V	2.0	1.6	-	V
V_{IL}	LOW-level input voltage	V_{CC} = 4.5 V to 5.5 V	-	1.2	0.8	V
V_{OH}	HIGH-level output voltage	$V_I = V_{IH}$ or V_{IL}				
		V_{CC} = 4.5 V; I_O = −20 μA	4.4	4.5	-	V
		V_{CC} = 4.5 V; I_O = −4 mA	3.98	4.32	-	V

© NXP B.V. 2007. All rights reserved.

Table 7. Static characteristics 74HCT154 *...continued*

At recommended operating conditions; voltages are referenced to GND (ground = 0 V).

Symbol	Parameter	Conditions	Min	Typ	Max	Unit
V_{OL}	LOW-level output voltage	$V_I = V_{IH}$ or V_{IL}				
		V_{CC} = 4.5 V; I_O = 20 μA	-	0	0.1	V
		V_{CC} = 4.5 V; I_O = 4 mA	-	0.15	0.25	V
I_I	input leakage current	V_{CC} = 5.5 V; $V_I = V_{CC}$ or GND	-	-	±0.1	μA
I_{CC}	supply current	V_{CC} = 5.5 V; $V_I = V_{CC}$ or GND; I_O = 0 A	-	-	8.0	μA
ΔI_{CC}	additional supply current	per input pin; V_{CC} = 4.5 V to 5.5 V; $V_I = V_{CC} - 2.1$ V; I_O = 0 A	-	-	360	μA
C_I	input capacitance		-	3.5	-	pF
T_{amb} = −40 °C to +85 °C						
V_{IH}	HIGH-level input voltage	V_{CC} = 4.5 V to 5.5 V	2.0	-	-	V
V_{IL}	LOW-level input voltage	V_{CC} = 4.5 V to 5.5 V	-	-	0.8	V
V_{OH}	HIGH-level output voltage	$V_I = V_{IH}$ or V_{IL}				
		V_{CC} = 4.5 V; I_O = −20 μA	4.4	-	-	V
		V_{CC} = 4.5 V; I_O = −4 mA	3.84	-	-	V
V_{OL}	LOW-level output voltage	$V_I = V_{IH}$ or V_{IL}				
		V_{CC} = 4.5 V; I_O = 20 μA	-	-	0.1	V
		V_{CC} = 4.5 V; I_O = 4 mA	-	-	0.33	V
I_I	input leakage current	V_{CC} = 5.5 V; $V_I = V_{CC}$ or GND	-	-	±1.0	μA
I_{CC}	supply current	V_{CC} = 5.5 V; $V_I = V_{CC}$ or GND; I_O = 0 A	-	-	80	μA
ΔI_{CC}	additional supply current	per input pin; V_{CC} = 4.5 V to 5.5 V; $V_I = V_{CC} - 2.1$ V; I_O = 0 A	-	-	450	μA
T_{amb} = −40 °C to +125 °C						
V_{IH}	HIGH-level input voltage	V_{CC} = 4.5 V to 5.5 V	2.0	-	-	V
V_{IL}	LOW-level input voltage	V_{CC} = 4.5 V to 5.5 V	-	-	0.8	V
V_{OH}	HIGH-level output voltage	$V_I = V_{IH}$ or V_{IL}				
		V_{CC} = 4.5 V; I_O = −20 μA	4.4	-	-	V
		V_{CC} = 4.5 V; I_O = −4 mA	3.7	-	-	V
V_{OL}	LOW-level output voltage	$V_I = V_{IH}$ or V_{IL}				
		V_{CC} = 4.5 V; I_O = 20 μA	-	-	0.1	V
		V_{CC} = 4.5 V; I_O = 4 mA	-	-	0.4	V
I_I	input leakage current	V_{CC} = 5.5 V; $V_I = V_{CC}$ or GND	-	-	±1.0	μA
I_{CC}	supply current	V_{CC} = 5.5 V; $V_I = V_{CC}$ or GND; I_O = 0 A	-	-	160	μA
ΔI_{CC}	additional supply current	per input pin; V_{CC} = 4.5 V to 5.5 V; $V_I = V_{CC} - 2.1$ V; I_O = 0 A	-	-	490	μA

© NXP B.V. 2007. All rights reserved.

10. Dynamic characteristics

Table 8. Dynamic characteristics

GND (ground = 0 V); C_L = 50 pF unless otherwise specified; for test circuit, see Figure 9.

Symbol	Parameter	Conditions		25 °C			–40 °C to +125 °C			Unit
				Min	Typ	Max	Min	Max (85 °C)	Max (125 °C)	
74HC154										
t_{pd}	propagation delay	An to $\overline{Yn}$; see Figure 7	[1]							
		V_{CC} = 2.0 V		-	36	150	-	190	225	ns
		V_{CC} = 4.5 V		-	13	30	-	38	45	ns
		V_{CC} = 5 V; C_L = 15 pF		-	11	-	-	-	-	ns
		V_{CC} = 6.0 V		-	10	26	-	33	38	ns
		$\overline{En}$ to $\overline{Yn}$; see Figure 8								
		V_{CC} = 2.0 V		-	39	150	-	190	225	ns
		V_{CC} = 4.5 V		-	14	30	-	38	45	ns
		V_{CC} = 5 V; C_L = 15 pF		-	11	-	-	-	-	ns
		V_{CC} = 6.0 V		-	11	26	-	33	38	ns
t_t	transition time	see Figure 7 and 8	[2]							
		V_{CC} = 2.0 V		-	19	75	-	95	110	ns
		V_{CC} = 4.5 V		-	7	15	-	19	22	ns
		V_{CC} = 6.0 V		-	6	13	-	16	19	ns
C_{PD}	power dissipation capacitance	per gate; V_I = GND to V_{CC}	[3]	-	60	-	-	-	-	pF
74HCT154										
t_{pd}	propagation delay	An to $\overline{Yn}$; see Figure 7	[1]							
		V_{CC} = 4.5 V		-	16	35	-	44	53	ns
		V_{CC} = 5 V; C_L = 15 pF		-	13	-	-	-	-	ns
		$\overline{En}$ to $\overline{Yn}$; see Figure 8								
		V_{CC} = 4.5 V		-	15	32	-	40	48	ns
		V_{CC} = 5 V; C_L = 15 pF		-	13	-	-	-	-	ns
t_t	transition time	see Figure 7 and 8	[2]							
		V_{CC} = 4.5 V		-	7	15	-	19	22	ns
C_{PD}	power dissipation capacitance	per gate; V_I = GND to (V_{CC} – 1.5 V)	[3]	-	60	-	-	-	-	pF

[1] t_{pd} is the same as t_{PLH} and t_{PHL}

[2] t_t is the same as t_{TLH} and t_{THL}

[3] C_{PD} is used to determine the dynamic power dissipation (P_D in µW).

$P_D = C_{PD} \times V_{CC}^2 \times f_i \times N + \Sigma(C_L \times V_{CC}^2 \times f_o)$ where:

f_i = input frequency in MHz;

f_o = output frequency in MHz;

C_L = output load capacitance in pF;

V_{CC} = supply voltage in V;

N = number of load switching outputs;

$\Sigma(C_L \times V_{CC}^2 \times f_o)$ = sum of the outputs.

© NXP B.V. 2007. All rights reserved.

11. Waveforms

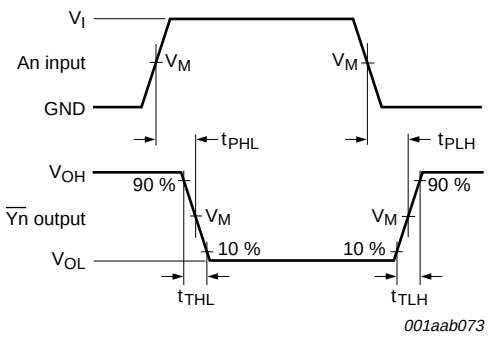

Measurement points are given in Table 9.

Fig 7. Propagation delay address input (An) to output ($\overline{Yn}$) and transition time output ($\overline{Yn}$)

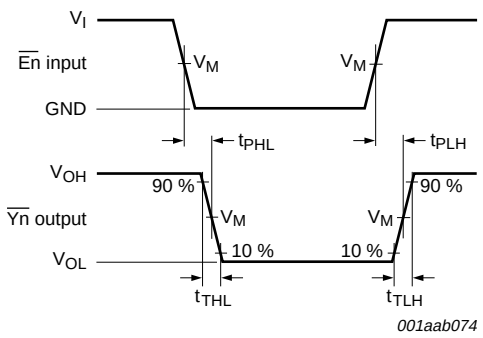

Measurement points are given in Table 9.

Fig 8. Propagation delay enable input ($\overline{En}$) to output ($\overline{Yn}$) and transition time output ($\overline{Yn}$)

Table 9. Measurement points

Type	Input	Output
	V_M	V_M
74HC154	$0.5V_{CC}$	$0.5V_{CC}$
74HCT154	1.3 V	1.3 V

© NXP B.V. 2007. All rights reserved.

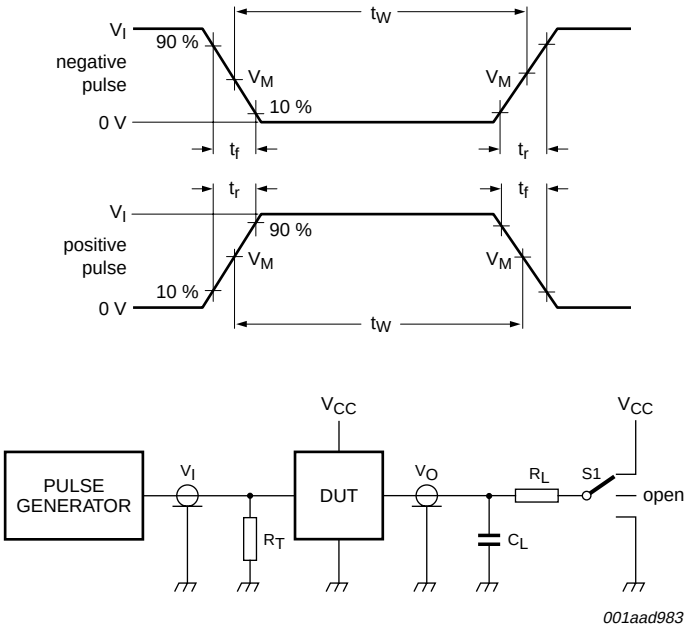

Test data is given in Table 10.

Definitions for test circuit:

R_T = Termination resistance; should be equal to output impedance Z_o of the pulse generator.

C_L = Load capacitance including jig and probe capacitance.

R_L = Load resistor.

S1 = Test selection switch.

Fig 9. Load circuitry for measuring switching times

Table 10. Test data

Type	Input		Load		S1 position
	V_I	t_r, t_f	C_L	R_L	t_{PHL}, t_{PLH}
74HC154	V_{CC}	6 ns	15 pF, 50 pF	1 kΩ	open
74HCT154	3 V	6 ns	15 pF, 50 pF	1 kΩ	open

© NXP B.V. 2007. All rights reserved.

12. Application information

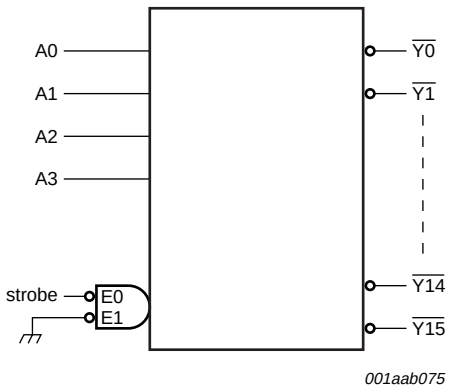

Fig 10. 1-of-16 decoder; LOW level output selected

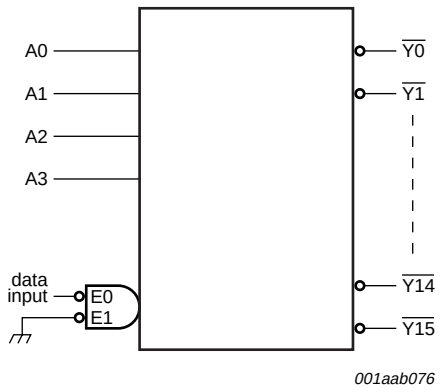

Fig 11. 1-of-16 demultiplexer; logic level on selected outputs follow the logic level on the data input

© NXP B.V. 2007. All rights reserved.

13. Package outline

DIP24: plastic dual in-line package; 24 leads (600 mil) **SOT101-1**

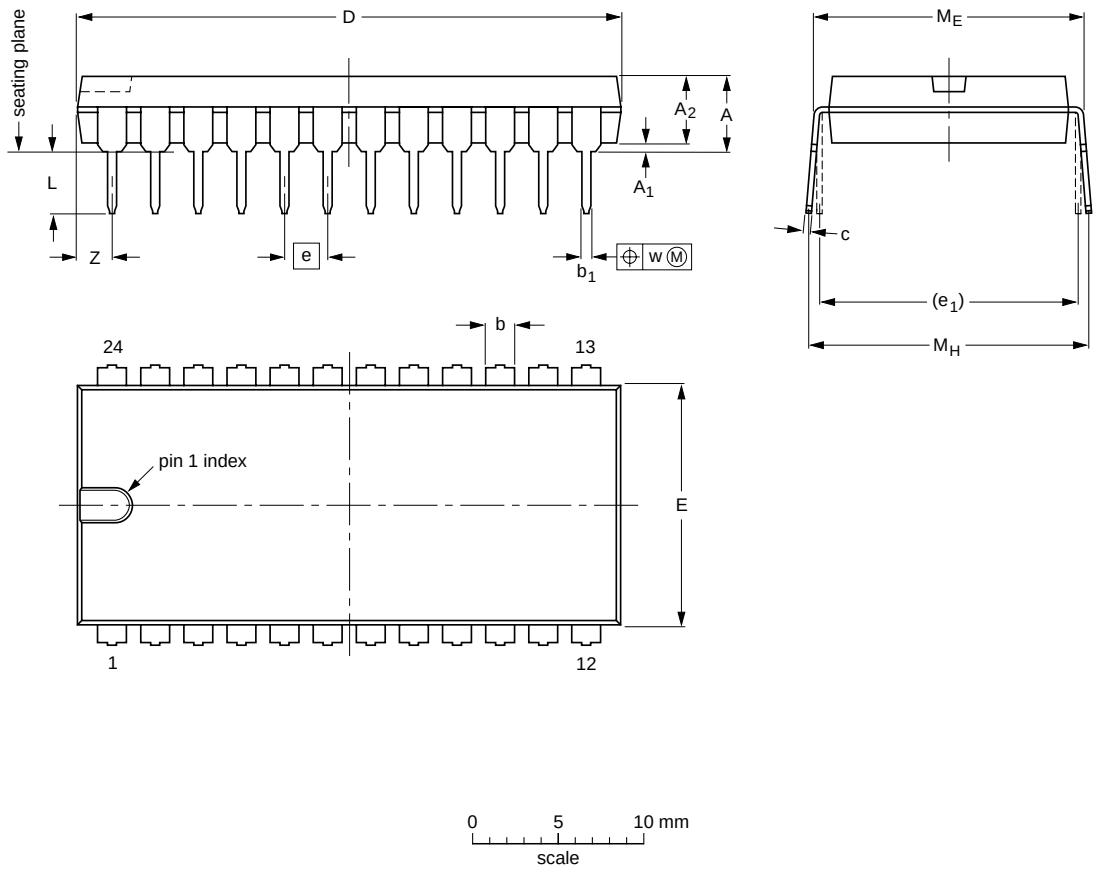

DIMENSIONS (inch dimensions are derived from the original mm dimensions)

UNIT	A max.	A_1 min.	A_2 max.	b	b_1	c	D (1)	E (1)	e	e_1	L	M_E	M_H	w	Z (1) max.
mm	5.1	0.51	4	1.7 1.3	0.53 0.38	0.32 0.23	32.0 31.4	14.1 13.7	2.54	15.24	3.9 3.4	15.80 15.24	17.15 15.90	0.25	2.2
inches	0.2	0.02	0.16	0.066 0.051	0.021 0.015	0.013 0.009	1.26 1.24	0.56 0.54	0.1	0.6	0.15 0.13	0.62 0.60	0.68 0.63	0.01	0.087

Note

1. Plastic or metal protrusions of 0.25 mm (0.01 inch) maximum per side are not included.

OUTLINE VERSION	REFERENCES				EUROPEAN PROJECTION	ISSUE DATE
	IEC	JEDEC	JEITA			
SOT101-1	051G02	MO-015	SC-509-24			~~99-12-27~~ 03-02-13

Fig 12. Package outline SOT101-1 (DIP24)

© NXP B.V. 2007. All rights reserved.

SO24: plastic small outline package; 24 leads; body width 7.5 mm **SOT137-1**

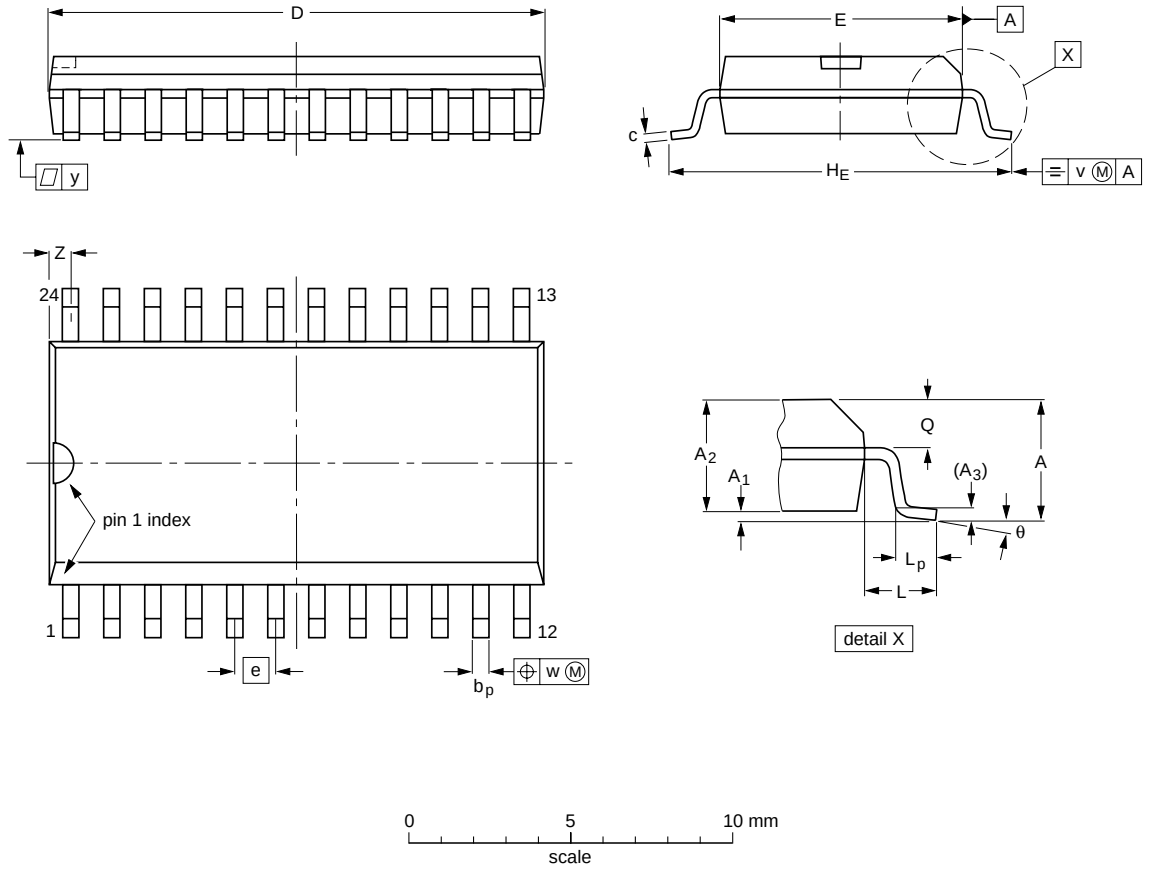

DIMENSIONS (inch dimensions are derived from the original mm dimensions)

UNIT	A max.	A_1	A_2	A_3	b_p	c	D (1)	E (1)	e	H_E	L	L_p	Q	v	w	y	Z (1)	θ
mm	2.65	0.3 0.1	2.45 2.25	0.25	0.49 0.36	0.32 0.23	15.6 15.2	7.6 7.4	1.27	10.65 10.00	1.4	1.1 0.4	1.1 1.0	0.25	0.25	0.1	0.9 0.4	8° 0°
inches	0.1	0.012 0.004	0.096 0.089	0.01	0.019 0.014	0.013 0.009	0.61 0.60	0.30 0.29	0.05	0.419 0.394	0.055	0.043 0.016	0.043 0.039	0.01	0.01	0.004	0.035 0.016	

Note

1. Plastic or metal protrusions of 0.15 mm (0.006 inch) maximum per side are not included.

OUTLINE VERSION	REFERENCES				EUROPEAN PROJECTION	ISSUE DATE
	IEC	JEDEC	JEITA			
SOT137-1	075E05	MS-013				~~99-12-27~~ 03-02-19

Fig 13. Package outline SOT137-1 (SO24)

© NXP B.V. 2007. All rights reserved.

SSOP24: plastic shrink small outline package; 24 leads; body width 5.3 mm **SOT340-1**

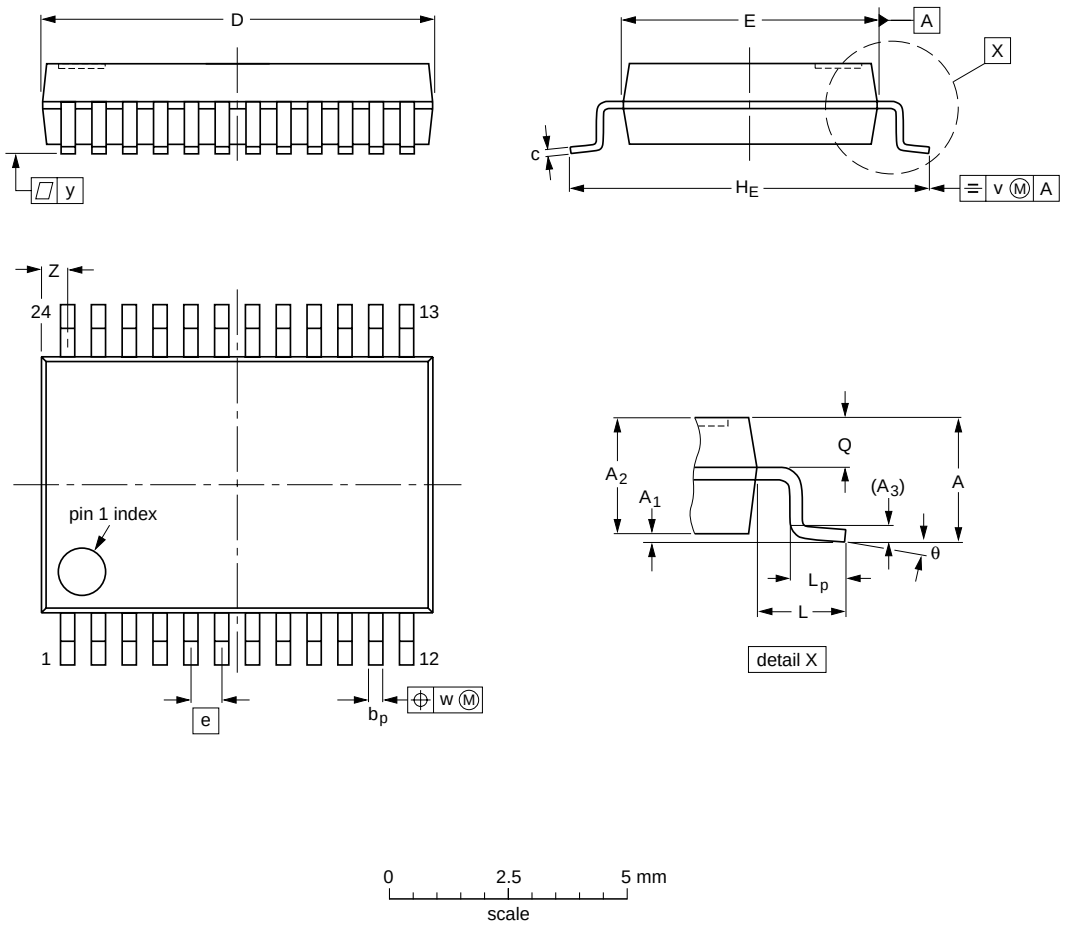

DIMENSIONS (mm are the original dimensions)

UNIT	A max.	A_1	A_2	A_3	b_p	c	D(1)	E(1)	e	H_E	L	L_p	Q	v	w	y	Z(1)	θ
mm	2	0.21 0.05	1.80 1.65	0.25	0.38 0.25	0.20 0.09	8.4 8.0	5.4 5.2	0.65	7.9 7.6	1.25	1.03 0.63	0.9 0.7	0.2	0.13	0.1	0.8 0.4	8° 0°

Note

1. Plastic or metal protrusions of 0.2 mm maximum per side are not included.

OUTLINE VERSION	REFERENCES				EUROPEAN PROJECTION	ISSUE DATE
	IEC	JEDEC	JEITA			
SOT340-1		MO-150				~~99-12-27~~ 03-02-19

Fig 14. Package outline SOT340-1 (SSOP24)

© NXP B.V. 2007. All rights reserved.

TSSOP24: plastic thin shrink small outline package; 24 leads; body width 4.4 mm **SOT355-1**

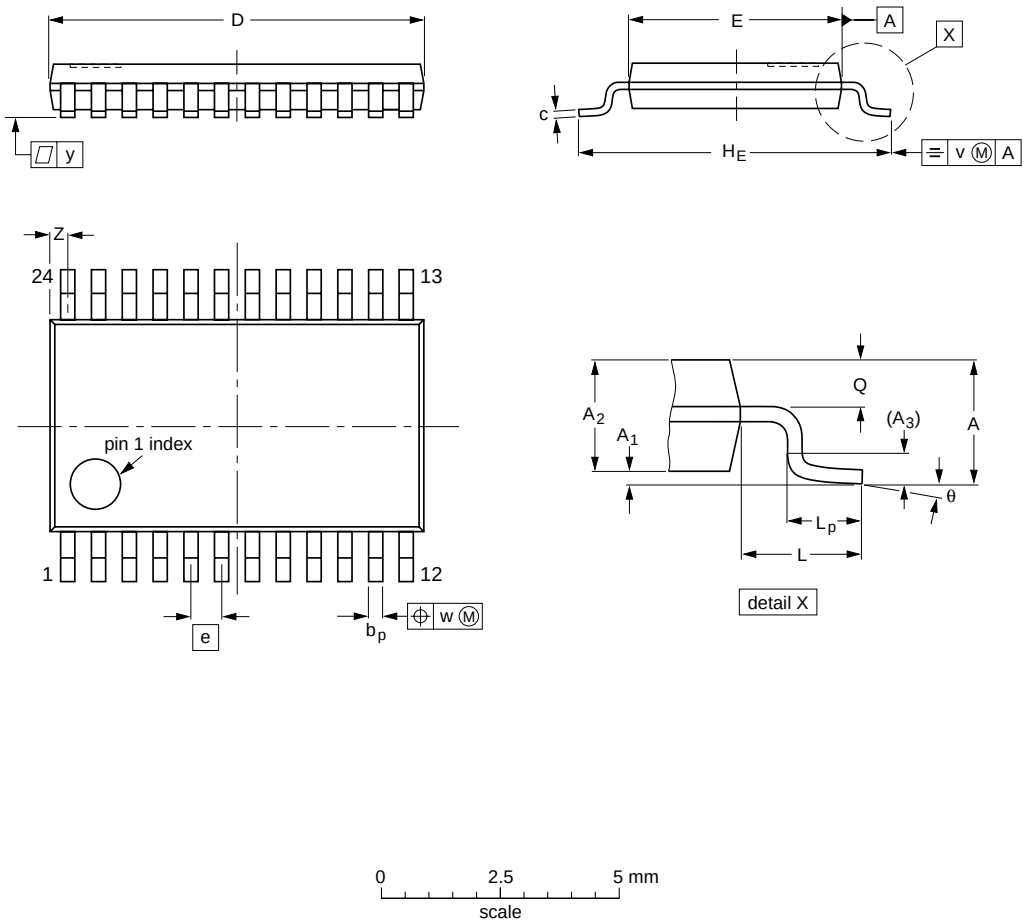

DIMENSIONS (mm are the original dimensions)

UNIT	A max.	A_1	A_2	A_3	b_p	c	D(1)	E(2)	e	H_E	L	L_p	Q	v	w	y	Z(1)	θ
mm	1.1	0.15 0.05	0.95 0.80	0.25	0.30 0.19	0.2 0.1	7.9 7.7	4.5 4.3	0.65	6.6 6.2	1	0.75 0.50	0.4 0.3	0.2	0.13	0.1	0.5 0.2	8° 0°

Notes

1. Plastic or metal protrusions of 0.15 mm maximum per side are not included.
2. Plastic interlead protrusions of 0.25 mm maximum per side are not included.

OUTLINE VERSION	REFERENCES				EUROPEAN PROJECTION	ISSUE DATE
	IEC	JEDEC	JEITA			
SOT355-1		MO-153				~~99-12-27~~ 03-02-19

Fig 15. Package outline SOT355-1 (TSSOP24)

© NXP B.V. 2007. All rights reserved.

DHVQFN24: plastic dual in-line compatible thermal enhanced very thin quad flat package; no leads; 24 terminals; body 3.5 x 5.5 x 0.85 mm **SOT815-1**

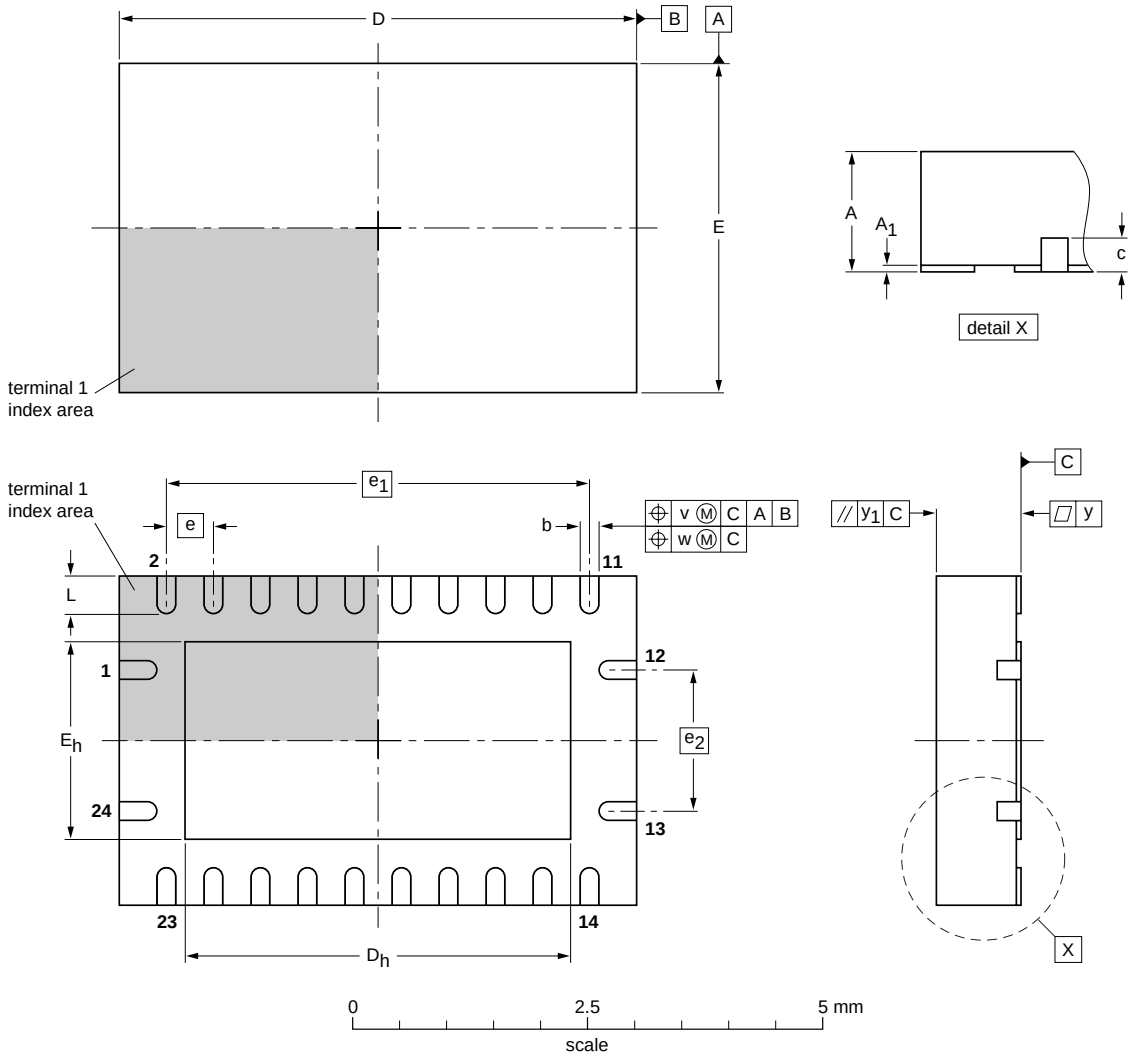

DIMENSIONS (mm are the original dimensions)

UNIT	A(1) max.	A_1	b	c	D(1)	D_h	E(1)	E_h	e	e_1	e_2	L	v	w	y	y_1
mm	1	0.05 0.00	0.30 0.18	0.2	5.6 5.4	4.25 3.95	3.6 3.4	2.25 1.95	0.5	4.5	1.5	0.5 0.3	0.1	0.05	0.05	0.1

Note

1. Plastic or metal protrusions of 0.075 mm maximum per side are not included.

OUTLINE VERSION	REFERENCES				EUROPEAN PROJECTION	ISSUE DATE
	IEC	JEDEC	JEITA			
SOT815-1	- - -	- - -	- - -			03-04-29

Fig 16. Package outline SOT815-1 (DHVQFN24)

© NXP B.V. 2007. All rights reserved.

14. Abbreviations

Table 11. Abbreviations

Acronym	Description
CMOS	Complementary Metal Oxide Semiconductor
DUT	Device Under Test
ESD	ElectroStatic Discharge
HBM	Human Body Model
LSTTL	Low-power Schottky Transistor-Transistor Logic
MM	Machine Model

15. Revision history

Table 12. Revision history

Document ID	Release date	Data sheet status	Change notice	Supersedes
74HC_HCT154_6	20070212	Product data sheet	-	74HC_HCT154_5
Modifications:	• The format of this data sheet has been redesigned to comply with the new identity guidelines of NXP Semiconductors. • Legal texts have been adapted to the new company name where appropriate. • Table 3 on page 5: Corrected errors in output information.			
74HC_HCT154_5	20041012	Product specification	-	74HC_HCT154_4
74HC_HCT154_4	20041005	Product specification	-	74HC_HCT154_3
74HC_HCT154_3	20040601	Product specification	-	74HC_HCT154_CNV_2

© NXP B.V. 2007. All rights reserved.

16. Legal information

16.1 Data sheet status

Document status[1][2]	Product status[3]	Definition
Objective [short] data sheet	Development	This document contains data from the objective specification for product development.
Preliminary [short] data sheet	Qualification	This document contains data from the preliminary specification.
Product [short] data sheet	Production	This document contains the product specification.

[1] Please consult the most recently issued document before initiating or completing a design.

[2] The term 'short data sheet' is explained in section "Definitions".

[3] The product status of device(s) described in this document may have changed since this document was published and may differ in case of multiple devices. The latest product status information is available on the Internet at URL http://www.nxp.com.

16.2 Definitions

Draft — The document is a draft version only. The content is still under internal review and subject to formal approval, which may result in modifications or additions. NXP Semiconductors does not give any representations or warranties as to the accuracy or completeness of information included herein and shall have no liability for the consequences of use of such information.

Short data sheet — A short data sheet is an extract from a full data sheet with the same product type number(s) and title. A short data sheet is intended for quick reference only and should not be relied upon to contain detailed and full information. For detailed and full information see the relevant full data sheet, which is available on request via the local NXP Semiconductors sales office. In case of any inconsistency or conflict with the short data sheet, the full data sheet shall prevail.

16.3 Disclaimers

General — Information in this document is believed to be accurate and reliable. However, NXP Semiconductors does not give any representations or warranties, expressed or implied, as to the accuracy or completeness of such information and shall have no liability for the consequences of use of such information.

Right to make changes — NXP Semiconductors reserves the right to make changes to information published in this document, including without limitation specifications and product descriptions, at any time and without notice. This document supersedes and replaces all information supplied prior to the publication hereof.

Suitability for use — NXP Semiconductors products are not designed, authorized or warranted to be suitable for use in medical, military, aircraft, space or life support equipment, nor in applications where failure or malfunction of a NXP Semiconductors product can reasonably be expected to result in personal injury, death or severe property or environmental damage. NXP Semiconductors accepts no liability for inclusion and/or use of NXP Semiconductors products in such equipment or applications and therefore such inclusion and/or use is at the customer's own risk.

Applications — Applications that are described herein for any of these products are for illustrative purposes only. NXP Semiconductors makes no representation or warranty that such applications will be suitable for the specified use without further testing or modification.

Limiting values — Stress above one or more limiting values (as defined in the Absolute Maximum Ratings System of IEC 60134) may cause permanent damage to the device. Limiting values are stress ratings only and operation of the device at these or any other conditions above those given in the Characteristics sections of this document is not implied. Exposure to limiting values for extended periods may affect device reliability.

Terms and conditions of sale — NXP Semiconductors products are sold subject to the general terms and conditions of commercial sale, as published at http://www.nxp.com/profile/terms, including those pertaining to warranty, intellectual property rights infringement and limitation of liability, unless explicitly otherwise agreed to in writing by NXP Semiconductors. In case of any inconsistency or conflict between information in this document and such terms and conditions, the latter will prevail.

No offer to sell or license — Nothing in this document may be interpreted or construed as an offer to sell products that is open for acceptance or the grant, conveyance or implication of any license under any copyrights, patents or other industrial or intellectual property rights.

16.4 Trademarks

Notice: All referenced brands, product names, service names and trademarks are the property of their respective owners.

17. Contact information

For additional information, please visit: **http://www.nxp.com**

For sales office addresses, send an email to: **salesaddresses@nxp.com**

© NXP B.V. 2007. All rights reserved.

18. Contents

1 General description 1
2 Features 1
3 Ordering information 1
4 Functional diagram 2
5 Pinning information 4
5.1 Pinning 4
5.2 Pin description 4
6 Functional description 5
7 Limiting values 6
8 Recommended operating conditions 6
9 Static characteristics 7
10 Dynamic characteristics 10
11 Waveforms 11
12 Application information 13
13 Package outline 14
14 Abbreviations 19
15 Revision history 19
16 Legal information 20
16.1 Data sheet status 20
16.2 Definitions 20
16.3 Disclaimers 20
16.4 Trademarks 20
17 Contact information 20
18 Contents 21

Please be aware that important notices concerning this document and the product(s) described herein, have been included in section 'Legal information'.

founded by PHILIPS

© NXP B.V. 2007. All rights reserved.

For more information, please visit: http://www.nxp.com
For sales office addresses, please send an email to: salesaddresses@nxp.com

Date of release: 12 February 2007
Document identifier: 74HC_HCT154_6

Компания «ЭлектроПласт» предлагает заключение долгосрочных отношений при поставках импортных электронных компонентов на взаимовыгодных условиях!

Наши преимущества:

- Оперативные поставки широкого спектра электронных компонентов отечественного и импортного производства напрямую от производителей и с крупнейших мировых складов;
- Поставка более 17-ти миллионов наименований электронных компонентов;
- Поставка сложных, дефицитных, либо снятых с производства позиций;
- Оперативные сроки поставки под заказ (от 5 рабочих дней);
- Экспресс доставка в любую точку России;
- Техническая поддержка проекта, помощь в подборе аналогов, поставка прототипов;
- Система менеджмента качества сертифицирована по Международному стандарту ISO 9001;
- Лицензия ФСБ на осуществление работ с использованием сведений, составляющих государственную тайну;
- Поставка специализированных компонентов (Xilinx, Altera, Analog Devices, Intersil, Interpoint, Microsemi, Aeroflex, Peregrine, Syfer, Eurofarad, Texas Instrument, Miteq, Cobham, E2V, MA-COM, Hittite, Mini-Circuits,General Dynamics и др.);

Помимо этого, одним из направлений компании «ЭлектроПласт» является направление «Источники питания». Мы предлагаем Вам помощь Конструкторского отдела:

- Подбор оптимального решения, техническое обоснование при выборе компонента;
- Подбор аналогов;
- Консультации по применению компонента;
- Поставка образцов и прототипов;
- Техническая поддержка проекта;
- Защита от снятия компонента с производства.

Как с нами связаться

Телефон: 8 (812) 309 58 32 (многоканальный)
Факс: 8 (812) 320-02-42
Электронная почта: org@eplast1.ru
Адрес: 198099, г. Санкт-Петербург, ул. Калинина, дом 2, корпус 4, литера А.