19-2325; Rev 5; 12/05

Dual/Triple Ultra-Low-Voltage SOT23 µP Supervisory Circuits

General Description

The MAX6715–MAX6729 are ultra-low-voltage microprocessor (µP) supervisory circuits designed to monitor two or three system power-supply voltages. These devices assert a system reset if any monitored supply falls below its factory-trimmed or adjustable threshold and maintain reset for a minimum timeout period after all supplies rise above their thresholds. The integrated dual/triple supervisory circuits significantly improve system reliability and reduce size compared to separate ICs or discrete components.

These devices monitor primary supply voltages ($V_{CC}1$) from 1.8V to 5.0V and secondary supply voltages ($V_{CC}2$) from 0.9V to 3.3V with factory-trimmed reset threshold voltage options (see *Reset Voltage Threshold Suffix Guide*). An externally adjustable RSTIN input option allows customers to monitor a third supply voltage down to 0.62V. These devices are guaranteed to be in the correct reset output logic state when either $V_{CC}1$ or $V_{CC}2$ remains greater than 0.8V.

A variety of push-pull or open-drain reset outputs along with watchdog input, manual reset input, and power-fail input/output features are available (see *Selector Guide*). Select reset timeout periods from 1.1ms to 1120ms (min) (see *Reset Timeout Period Suffix Guide*). The MAX6715–MAX6729 are available in small 5, 6, and 8-pin SOT23 packages and operate over the -40°C to +85°C temperature range.

Applications

Multivoltage Systems
Telecom/Networking Equipment
Computers/Servers
Portable/Battery-Operated Equipment
Industrial Equipment
Printer/Fax
Set-Top Boxes

Typical Operating Circuit

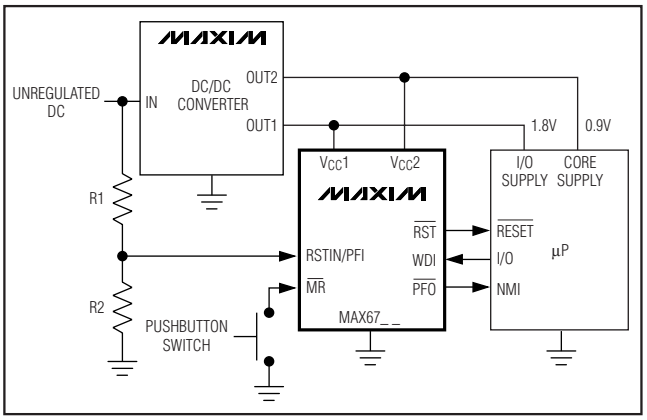

Features

- ♦ **$V_{CC}1$ (primary supply) Reset Threshold Voltages from 1.58V to 4.63V**
- ♦ **$V_{CC}2$ (secondary supply) Reset Threshold Voltages from 0.79V to 3.08V**
- ♦ **Externally Adjustable RSTIN Threshold for Auxiliary/Triple-Voltage Monitoring (0.62V internal reference)**
- ♦ **Watchdog Timer Option**
  35s (min) Long Startup Period
  1.12s (min) Normal Timeout Period
- ♦ **Manual Reset Input Option**
- ♦ **Power-Fail Input/Power-Fail Output Option (Push-Pull and Open-Drain Active-Low)**
- ♦ **Guaranteed Reset Valid Down to $V_{CC}1$ or $V_{CC}2$ = 0.8V**
- ♦ **Reset Output Logic Options**
- ♦ **Immune to Short V_{CC} Transients**
- ♦ **Low Supply Current 14µA (typ) at 3.6V**
- ♦ **Small 5, 6, and 8-Pin SOT23 Packages**

Ordering Information

PART	TEMP RANGE	PIN-PACKAGE
MAX6715UT_ _D_ -T	-40°C to +85°C	6 SOT23-6
MAX6716UT_ _D_ -T	-40°C to +85°C	6 SOT23-6
MAX6717UK_ _D_ -T	-40°C to +85°C	5 SOT23-5
MAX6718UK_ _D_ -T	-40°C to +85°C	5 SOT23-5
MAX6719UT_ _D_ -T	-40°C to +85°C	6 SOT23-6
MAX6720UT_ _D_ -T	-40°C to +85°C	6 SOT23-6

Note: *The first "_ _" are placeholders for the threshold voltage levels of the devices. Desired threshold levels are set by the part number suffix found in the Reset Voltage Threshold Suffix Guide. The "_" after the D is a placeholder for the reset timeout delay time. Desired delay time is set using the timeout period suffix found in the Reset Timeout Period Suffix Guide. For example the MAX6716UTLTD3-T is a dual-voltage supervisor $V_{TH}1$ = 4.625V, $V_{TH}2$ = 3.075V, and 210ms (typ) timeout period.*

Devices are available in both leaded and lead-free packaging. Specify lead-free by replacing "-T" with "+T" when ordering.

Ordering Information continued at end of data sheet.

Pin Configurations and Selector Guide appear at end of data sheet.

For pricing, delivery, and ordering information, please contact Maxim/Dallas Direct! at 1-888-629-4642, or visit Maxim's website at www.maxim-ic.com.

Dual/Triple Ultra-Low-Voltage SOT23 µP Supervisory Circuits

ABSOLUTE MAXIMUM RATINGS

Terminal Voltage (with respect to GND)
$V_{CC}1$, $V_{CC}2$ .....-0.3V to +6V
Open-Drain $\overline{RST}$, $\overline{RST1}$, $\overline{RST2}$, $\overline{PFO}$, RST .....-0.3V to +6V
Push-Pull RST, $\overline{RST1}$, $\overline{PFO}$, $\overline{RST}$.....-0.3V to ($V_{CC}1$ + 0.3V)
Push-Pull $\overline{RST2}$.....-0.3V to ($V_{CC}2$ + 0.3V)
RSTIN, PFI, $\overline{MR}$, WDI.....-0.3V to +6V
Input Current/Output Current (all pins) 20mA

Continuous Power Dissipation (T_A = +70°C)
5-Pin SOT23-5 (derate 7.1mW/°C above +70°C) 571mW
6-Pin SOT23-6 (derate 8.7mW/°C above +70°C) 696mW
8-Pin SOT23-8 (derate 8.9mW/°C above +70°C) 714mW
Operating Temperature Range .....-40°C to +85°C
Storage Temperature Range .....-65°C to +150°C
Junction Temperature.....+150°C
Lead Temperature (soldering, 10s) .....+300°C

Stresses beyond those listed under "Absolute Maximum Ratings" may cause permanent damage to the device. These are stress ratings only, and functional operation of the device at these or any other conditions beyond those indicated in the operational sections of the specifications is not implied. Exposure to absolute maximum rating conditions for extended periods may affect device reliability.

ELECTRICAL CHARACTERISTICS

($V_{CC}1$ = $V_{CC}2$ = 0.8V to 5.5V, GND = 0, T_A = -40°C to +85°C, unless otherwise noted. Typical values are at T_A = +25°C.) (Note 1)

PARAMETER	SYMBOL	CONDITIONS	MIN	TYP	MAX	UNITS
Supply Voltage	V_{CC}		0.8		5.5	V
Supply Current	I_{CC1}	$V_{CC}1$ < 5.5V, all I/O pins open		15	39	µA
		$V_{CC}1$ < 3.6V, all I/O pins open		10	28	
	I_{CC2}	$V_{CC}2$ < 3.6V, all I/O pins open		4	11	
		$V_{CC}2$ < 2.75V, all I/O pins open		3	9	
$V_{CC}1$ Reset Threshold	V_{TH1}	L (falling)	4.500	4.625	4.750	V
		M (falling)	4.250	4.375	4.500	
		T (falling)	3.000	3.075	3.150	
		S (falling)	2.850	2.925	3.000	
		R (falling)	2.550	2.625	2.700	
		Z (falling)	2.250	2.313	2.375	
		Y (falling)	2.125	2.188	2.250	
		W (falling)	1.620	1.665	1.710	
		V (falling)	1.530	1.575	1.620	
$V_{CC}2$ Reset Threshold	V_{TH2}	T (falling)	3.000	3.075	3.150	V
		S (falling)	2.850	2.925	3.000	
		R (falling)	2.550	2.625	2.700	
		Z (falling)	2.250	2.313	2.375	
		Y (falling)	2.125	2.188	2.250	
		W (falling)	1.620	1.665	1.710	
		V (falling)	1.530	1.575	1.620	
		I (falling)	1.350	1.388	1.425	
		H (falling)	1.275	1.313	1.350	
		G (falling)	1.080	1.110	1.140	
		F (falling)	1.020	1.050	1.080	
		E (falling)	0.810	0.833	0.855	
		D (falling)	0.765	0.788	0.810	
Reset Threshold Tempco				20		ppm/°C
Reset Threshold Hysteresis	V_{HYST}	Referenced to V_{TH} typical		0.5		%

ELECTRICAL CHARACTERISTICS (continued)

($V_{CC}1$ = $V_{CC}2$ = 0.8V to 5.5V, GND = 0, T_A = -40°C to +85°C, unless otherwise noted. Typical values are at T_A = +25°C.) (Note 1)

PARAMETER	SYMBOL	CONDITIONS	MIN	TYP	MAX	UNITS
V_{CC} to Reset Output Delay	t_{RD}	$V_{CC}1$ = ($V_{TH}1$ + 100mV) to ($V_{TH}1$ - 100mV) or $V_{CC}2$ = ($V_{TH}2$ + 75mV) to ($V_{TH}2$ - 75mV)		20		µs
Reset Timeout Period	t_{RP}	D1	1.1	1.65	2.2	ms
		D2	8.8	13.2	17.6	
		D3	140	210	280	
		D5	280	420	560	
		D6	560	840	1120	
		D4	1120	1680	2240	
ADJUSTABLE RESET COMPARATOR INPUT (MAX6719/MAX6720/MAX6723–MAX6727)						
RSTIN Input Threshold	V_{RSTIN}		611	626.5	642	mV
RSTIN Input Current	I_{RSTIN}		-25		+25	nA
RSTIN Hysteresis				3		mV
RSTIN to Reset Output Delay	t_{RSTIND}	V_{RSTIN} to (V_{RSTIN} - 30mV)		22		µs
POWER-FAIL INPUT (MAX6728/MAX6729)						
PFI Input Threshold	V_{PFI}		611	626.5	642	mV
PFI Input Current	I_{PFI}		-25		+25	nA
PFI Hysteresis	V_{PFH}			3		mV
PFI to $\overline{PFO}$ Delay	t_{DPF}	(V_{PFI} + 30mV) to (V_{PFI} - 30mV)		2		µs
MANUAL RESET INPUT (MAX6715–MAX6722/MAX6725–MAX6729)						
$\overline{MR}$ Input Voltage	V_{IL}				0.3 × $V_{CC}1$	V
	V_{IH}		0.7 × $V_{CC}1$			
$\overline{MR}$ Minimum Pulse Width			1			µs
$\overline{MR}$ Glitch Rejection				100		ns
$\overline{MR}$ to Reset Delay	t_{MR}			200		ns
$\overline{MR}$ Pullup Resistance			25	50	80	kΩ
WATCHDOG INPUT (MAX6721–MAX6729)						
Watchdog Timeout Period	t_{WD}	First watchdog period after reset timeout period	35	54	72	s
		Normal mode	1.12	1.68	2.24	
WDI Pulse Width	t_{WDI}	(Note 2)	50			ns
WDI Input Voltage	V_{IL}				0.3 × $V_{CC}1$	V
	V_{IH}		0.7 × $V_{CC}1$			
WDI Input Current	I_{WDI}	WDI = 0 or $V_{CC}1$	-1		+1	µA

Dual/Triple Ultra-Low-Voltage SOT23 µP Supervisory Circuits

ELECTRICAL CHARACTERISTICS (continued)

($V_{CC}1 = V_{CC}2 = 0.8V$ to 5.5V, GND = 0, T_A = -40°C to +85°C, unless otherwise noted. Typical values are at T_A = +25°C.) (Note 1)

PARAMETER	SYMBOL	CONDITIONS	MIN	TYP	MAX	UNITS
RESET/POWER-FAIL OUTPUTS						
$\overline{RST}$/$\overline{RST1}$/$\overline{RST2}$/$\overline{PFO}$ Output LOW (Push-Pull or Open-Drain)	V_{OL}	$V_{CC}1$ or $V_{CC}2 \geq 0.8V$, I_{SINK} = 1µA, output asserted			0.3	V
		$V_{CC}1$ or $V_{CC}2 \geq 1.0V$, I_{SINK} = 50µA, output asserted			0.3	
		$V_{CC}1$ or $V_{CC}2 \geq 1.2V$, I_{SINK} = 100µA, output asserted			0.3	
		$V_{CC}1$ or $V_{CC}2 \geq 2.7V$, I_{SINK} = 1.2mA, output asserted			0.3	
		$V_{CC}1$ or $V_{CC}2 \geq 4.5V$, I_{SINK} = 3.2mA, output asserted			0.4	
$\overline{RST}$/$\overline{RST1}$/$\overline{PFO}$ Output HIGH (Push-Pull Only)	V_{OH}	$V_{CC}1 \geq 1.8V$, I_{SOURCE} = 200µA, output not asserted	$0.8 \times V_{CC}1$			V
		$V_{CC}1 \geq 2.7V$, I_{SOURCE} = 500µA, output not asserted	$0.8 \times V_{CC}1$			
		$V_{CC}1 \geq 4.5V$, I_{SOURCE} = 800µA, output not asserted	$0.8 \times V_{CC}1$			
$\overline{RST2}$ Output HIGH (Push-Pull Only)	V_{OH}	$V_{CC}2 \geq 1.8V$, I_{SOURCE} = 200µA, output not asserted	$0.8 \times V_{CC}2$			V
		$V_{CC}2 \geq 2.7V$, I_{SOURCE} = 500µA, output not asserted	$0.8 \times V_{CC}2$			
		$V_{CC}2 \geq 4.5V$, I_{SOURCE} = 800µA, output not asserted	$0.8 \times V_{CC}2$			
RST Output HIGH (Push-Pull Only)	V_{OH}	$V_{CC}1 \geq 1.0V$, I_{SOURCE} = 1µA, reset asserted	$0.8 \times V_{CC}1$			V
		$V_{CC}1 \geq 1.8V$, I_{SOURCE} = 150µA, reset asserted	$0.8 \times V_{CC}1$			
		$V_{CC}1 \geq 2.7V$, I_{SOURCE} = 500µA, reset asserted	$0.8 \times V_{CC}1$			
		$V_{CC}1 \geq 4.5V$, I_{SOURCE} = 800µA, reset asserted	$0.8 \times V_{CC}1$			
RST Output LOW (Push-Pull or Open Drain)	V_{OL}	$V_{CC}1$ or $V_{CC}2 \geq 1.8V$, I_{SINK} = 500µA, reset not asserted			0.3	V
		$V_{CC}1$ or $V_{CC}2 \geq 2.7V$, I_{SINK} = 1.2mA, reset not asserted			0.3	
		$V_{CC}1$ or $V_{CC}2 \geq 4.5V$, I_{SINK} = 3.2mA, reset not asserted			0.4	
$\overline{RST}$/$\overline{RST1}$/$\overline{RST2}$/$\overline{PFO}$ Output Open-Drain Leakage Current		Output not asserted			0.5	µA
RST Output Open-Drain Leakage Current		Output asserted			0.5	µA

Note 1: Devices tested at +25°C. Overtemperature limits are guaranteed by design and not production tested.
Note 2: Parameter guaranteed by design.

Typical Operating Characteristics

($V_{CC}1$ = 5V, $V_{CC}2$ = 3.3V, T_A = +25°C, unless otherwise noted.)

SUPPLY CURRENT vs. TEMPERATURE
$V_{CC}1$ = 5V, $V_{CC}2$ = 3.3V

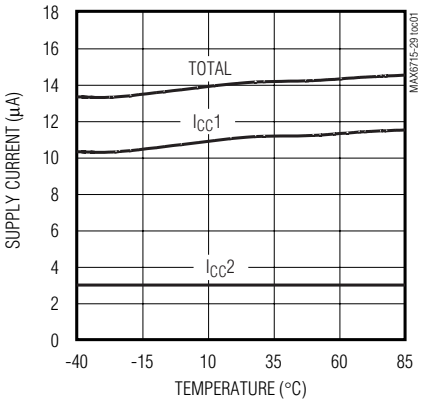

SUPPLY CURRENT vs. TEMPERATURE
$V_{CC}1$ = 3.3V, $V_{CC}2$ = 2.5V

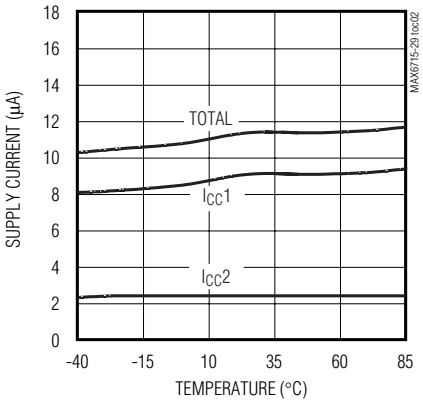

SUPPLY CURRENT vs. TEMPERATURE
$V_{CC}1$ = 2.5V, $V_{CC}2$ = 1.8V

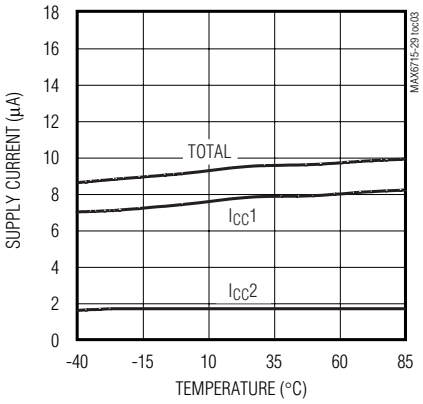

SUPPLY CURRENT vs. TEMPERATURE
$V_{CC}1$ = 1.8V, $V_{CC}2$ = 1.2V

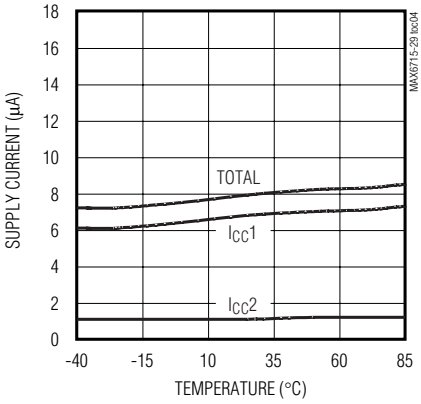

NORMALIZED RESET/WATCHDOG TIMEOUT PERIOD vs. TEMPERATURE

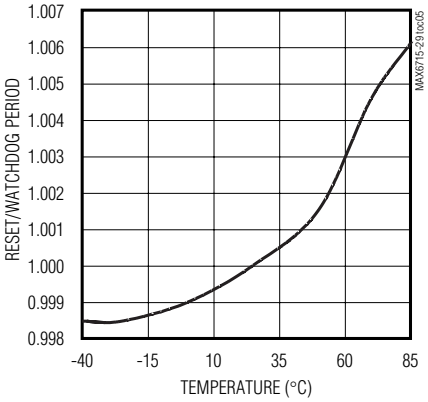

MAXIMUM V_{CC} TRANSIENT DURATION vs. RESET THRESHOLD OVERDRIVE

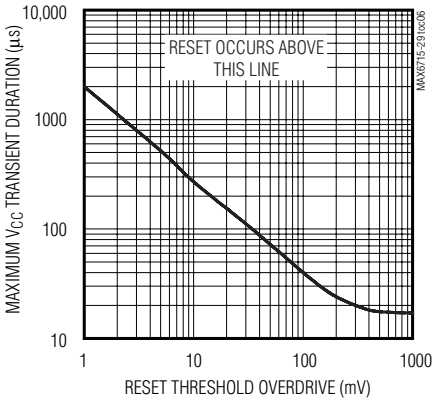

NORMALIZED V_{CC} RESET THRESHOLD vs. TEMPERATURE

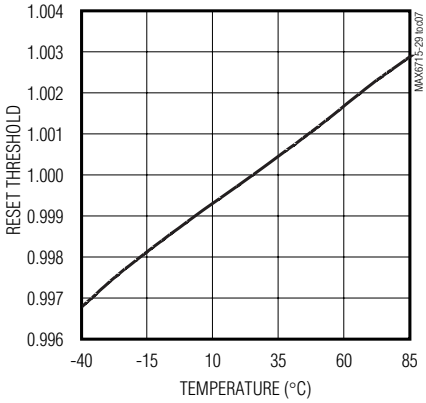

RESET INPUT AND POWER-FAIL INPUT THRESHOLD vs. TEMPERATURE

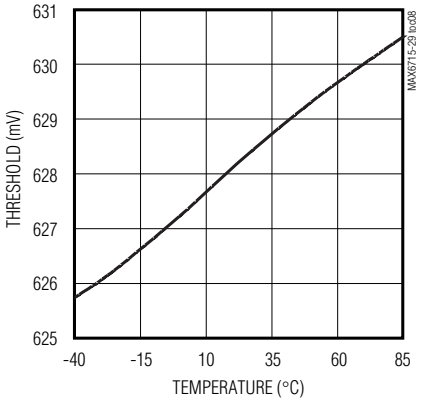

V_{CC} TO RESET DELAY vs. TEMPERATURE

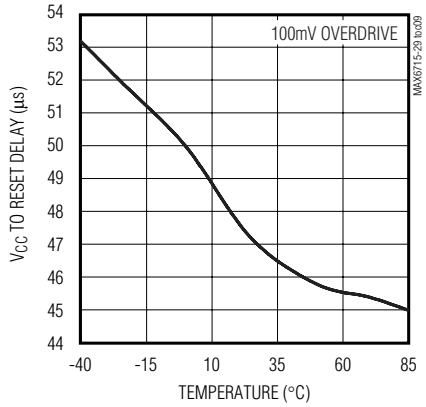

Dual/Triple Ultra-Low-Voltage SOT23 µP Supervisory Circuits

Typical Operating Characteristics (continued)

($V_{CC}1$ = 5V, $V_{CC}2$ = 3.3V, T_A = +25°C, unless otherwise noted.)

RESET INPUT TO RESET OUTPUT DELAY vs. TEMPERATURE

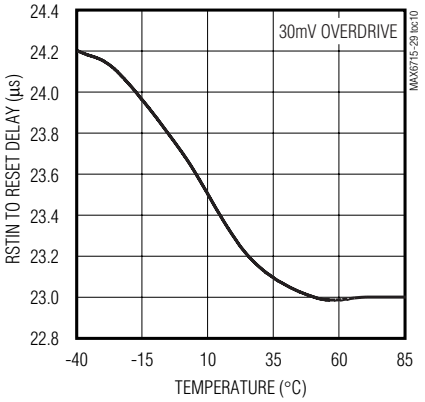

POWER-FAIL INPUT TO POWER-FAIL OUTPUT DELAY vs. TEMPERATURE

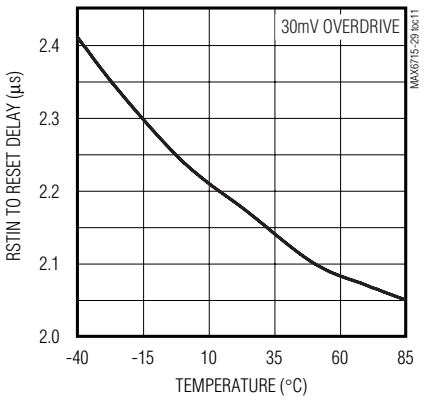

$\overline{MR}$ TO RESET OUTPUT DELAY

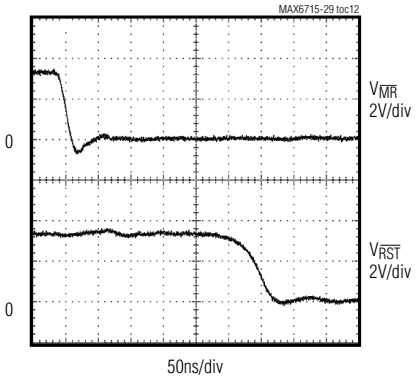

Pin Description

PIN								NAME	FUNCTION
MAX6715/ MAX6716	MAX6717/ MAX6718	MAX6719/ MAX6720	MAX6721/ MAX6722	MAX6723/ MAX6724	MAX6725/ MAX6726	MAX6727	MAX6728/ MAX6729		
1	1	1	1	1	1	1, 4	1	$\overline{RST}$/ $\overline{RST1}$	Active-Low Reset Output, Open-Drain or Push-Pull. $\overline{RST}$/$\overline{RST1}$ changes from high to low when $V_{CC}1$ or $V_{CC}2$ drops below the selected reset thresholds, RSTIN is below threshold, $\overline{MR}$ is pulled low, or the watchdog triggers a reset. $\overline{RST}$/$\overline{RST1}$ remains low for the reset timeout period after $V_{CC}1$/ $V_{CC}2$/RSTIN exceed the device reset thresholds, $\overline{MR}$ goes low to high, or the watchdog triggers a reset. Open-drain outputs require an external pullup resistor. Push-pull outputs are referenced to $V_{CC}1$.

Pin Description (continued)

PIN								NAME	FUNCTION
MAX6715/ MAX6716	MAX6717/ MAX6718	MAX6719/ MAX6720	MAX6721/ MAX6722	MAX6723/ MAX6724	MAX6725/ MAX6726	MAX6727	MAX6728/ MAX6729		
5	—	—	—	—	—	—	—	$\overline{RST2}$	Active-Low Reset Output, Open-Drain or Push-Pull. $\overline{RST2}$ changes from high to low when $V_{CC}1$ or $V_{CC}2$ drops below the selected reset thresholds or $\overline{MR}$ is pulled low. $\overline{RST2}$ remains low for the reset timeout period after $V_{CC}1/V_{CC}2$ exceed the device reset thresholds or $\overline{MR}$ goes low to high. Open-drain outputs require an external pullup resistor. Push-pull outputs are referenced to $V_{CC}2$.
2	2	2	2	2	2	2	2	GND	Ground
3	3	3	3	—	5	5	5	$\overline{MR}$	Active-Low Manual Reset Input. Internal 50kΩ pullup to $V_{CC}1$. Pull low to force a reset. Reset remains active as long as $\overline{MR}$ is low and for the reset timeout period after $\overline{MR}$ goes high. Leave unconnected or connect to $V_{CC}1$ if unused.
4	4	4	4	4	6	6	6	$V_{CC}2$	Secondary Supply Voltage Input. Powers the device when it is above $V_{CC}1$ and input for secondary reset threshold monitor.
6	5	6	6	6	8	8	8	$V_{CC}1$	Primary Supply Voltage Input. Powers the device when it is above $V_{CC}2$ and input for primary reset threshold monitor.

Dual/Triple Ultra-Low-Voltage SOT23 µP Supervisory Circuits

Pin Description (continued)

PIN								NAME	FUNCTION
MAX6715/ MAX6716	MAX6717/ MAX6718	MAX6719/ MAX6720	MAX6721/ MAX6722	MAX6723/ MAX6724	MAX6725/ MAX6726	MAX6727	MAX6728/ MAX6729		
—	—	—	5	3	3	3	3	WDI	Watchdog Input. If WDI remains high or low for longer than the watchdog timeout period, the internal watchdog timer runs out and the reset output asserts for the reset timeout period. The internal watchdog timer clears whenever a reset is asserted or WDI sees a rising or falling edge. The watchdog has a long timeout period (35s min) after each reset event and a short timeout period (1.12s min) after the first valid WDI transition.
—	—	5	—	5	7	7	—	RSTIN	Undervoltage Reset Comparator Input. High-impedance input for adjustable reset monitor. The reset output is asserted when RSTIN falls below the 0.626V internal reference voltage. Set the monitored voltage reset threshold with an external resistor-divider network. Connect RSTIN to $V_{CC}1$ or $V_{CC}2$ if not used.
—	—	—	—	—	—	—	7	PFI	Power-Fail Voltage Monitor Input. High-impedance input for internal power-fail monitor comparator. Connect PFI to an external resistor-divider network to set the power-fail threshold voltage (0.626V typical internal reference voltage). Connect to GND, $V_{CC}1$, or $V_{CC}2$ if not used.

Pin Description (continued)

PIN								NAME	FUNCTION
MAX6715/ MAX6716	MAX6717/ MAX6718	MAX6719/ MAX6720	MAX6721/ MAX6722	MAX6723/ MAX6724	MAX6725/ MAX6726	MAX6727	MAX6728/ MAX6729		
—	—	—	—	—	—	—	4	$\overline{PFO}$	Active-Low Power-Fail Monitor Output, Open-Drain or Push-Pull. $\overline{PFO}$ is asserted low when PFI is less than 0.626V. $\overline{PFO}$ deasserts without a reset timeout period. Open-drain outputs require an external pullup resistor. Push-pull outputs are referenced to $V_{CC}1$.
—	—	—	—	—	4	—	—	RST	Active-High Reset Output, Open-Drain or Push-Pull. RST changes from low to high when $V_{CC}1$ or $V_{CC}2$ drops below selected reset thresholds, RSTIN is below threshold, $\overline{MR}$ is pulled low, or the watchdog triggers a reset. RST remains HIGH for the reset timeout period after $V_{CC}1$/ V_{CC} 2/RSTIN exceed the device reset thresholds, $\overline{MR}$ goes low to high, or the watchdog triggers a reset. Open-drain outputs require an external pullup resistor. Push-pull outputs are referenced to $V_{CC}1$.

Detailed Description

Supply Voltages

The MAX6715–MAX6729 microprocessor (µP) supervisory circuits maintain system integrity by alerting the µP to fault conditions. These ICs are optimized for systems that monitor two or three supply voltages. The output-reset state is guaranteed to remain valid while either $V_{CC}1$ or $V_{CC}2$ is above 0.8V.

Threshold Levels

Input voltage threshold level combinations are indicated by a two-letter code in the *Reset Voltage Threshold Suffix Guide* (Table 1). Contact factory for availability of other voltage threshold combinations.

Reset Outputs

The MAX6715–MAX6729 provides an active-low reset output ($\overline{RST}$) and the MAX6725/MAX6726 provides both an active-high (RST) and an active-low reset output ($\overline{RST}$). RST, $\overline{RST}$, $\overline{RST1}$, and $\overline{RST2}$ are asserted when the voltage at either $V_{CC}1$ or $V_{CC}2$ falls below the voltage threshold level, RSTIN drops below threshold, or $\overline{MR}$ is pulled low. Once reset is asserted it stays low for the reset timeout period (see Table 2). If $V_{CC}1$, $V_{CC}2$, or RSTIN goes below the reset threshold before the reset timeout period is completed, the internal timer

Dual/Triple Ultra-Low-Voltage SOT23 µP Supervisory Circuits

restarts. The MAX6715/MAX6717/MAX6719/MAX6721/MAX6723/MAX6725/MAX6727/MAX6728 contain open-drain reset outputs, while the MAX6716/MAX6718/MAX6720/MAX6722/MAX6724/MAX6726/MAX6729 contain push-pull reset outputs. The MAX6727 provides two separate open-drain $\overline{RST}$ outputs driven by the same internal logic.

Manual Reset Input

Many microprocessor-based products require manual reset capability, allowing the operator, a test technician, or external logic circuitry to initiate a reset. A logic low on $\overline{MR}$ asserts the reset output. Reset remains asserted while $\overline{MR}$ is low and for the reset timeout period (t_{RP}) after $\overline{MR}$ returns high. This input has an internal 50kΩ pullup resistor to $V_{CC}1$ and can be left unconnected if not used. $\overline{MR}$ can be driven with TTL or CMOS logic levels, or with open-drain/collector outputs. Connect a normally open momentary switch from $\overline{MR}$ to GND to create a manual reset function; external debounce circuitry is not required. If $\overline{MR}$ is driven from long cables or if the device is used in a noisy environment, connect a 0.1µF capacitor from $\overline{MR}$ to GND to provide additional noise immunity.

Adjustable Input Voltage

The MAX6719/MAX6720 and MAX6723–MAX6727 provide an additional input to monitor a third system voltage. The threshold voltage at RSTIN is typically 626mV. Connect a resistor-divider network to the circuit as shown in Figure 1 to establish an externally controlled threshold voltage, V_{EXT_TH}.

$$V_{EXT_TH} = 626mV((R1 + R2)/R2)$$

Low leakage current at RSTIN allows the use of large-valued resistors resulting in reduced power consumption of the system.

Watchdog Input

The watchdog monitors µP activity through the watchdog input (WDI). To use the watchdog function, connect WDI to a bus line or µP I/O line. When WDI remains high or low for longer than the watchdog timeout period, the reset output asserts.

The MAX6721–MAX6729 include a dual-mode watchdog timer to monitor µP activity. The flexible timeout architecture provides a long period initial watchdog mode, allowing complicated systems to complete lengthy boots, and a short period normal watchdog mode, allowing the supervisor to provide quick alerts

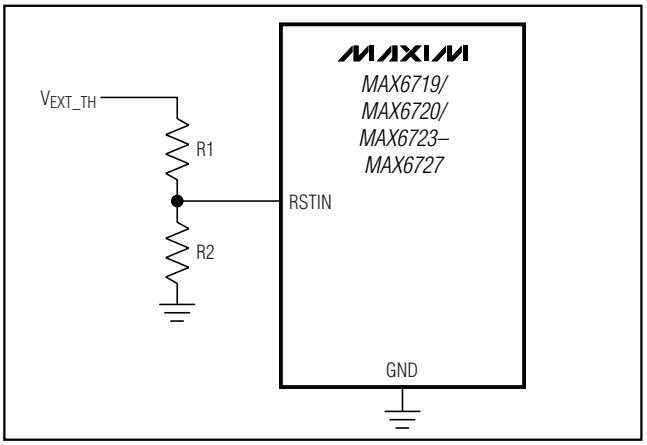

Figure 1. Monitoring a Third Voltage

when processor activity fails. After each reset event (V_{CC} power-up/brownout, manual reset, or watchdog reset), there is a long initial watchdog period of 35s minimum. The long watchdog period mode provides an extended time for the system to power-up and fully initialize all µP and system components before assuming responsibility for routine watchdog updates.

The normal watchdog timeout period (1.12s min) begins after the first transition on WDI before the conclusion of the long initial watchdog period (Figure 2). During the normal operating mode, the supervisor will issue a reset pulse for the reset timeout period if the µP does not update the WDI with a valid transition (high-to-low or low-to-high) within the standard timeout period (1.12s min).

Power-Fail Comparator

PFI is the noninverting input to a comparator. If PFI is less than V_{PFI} (626.5mV), $\overline{PFO}$ goes low. Common uses for the power-fail comparator include monitoring preregulated input of the power supply (such as a battery) or

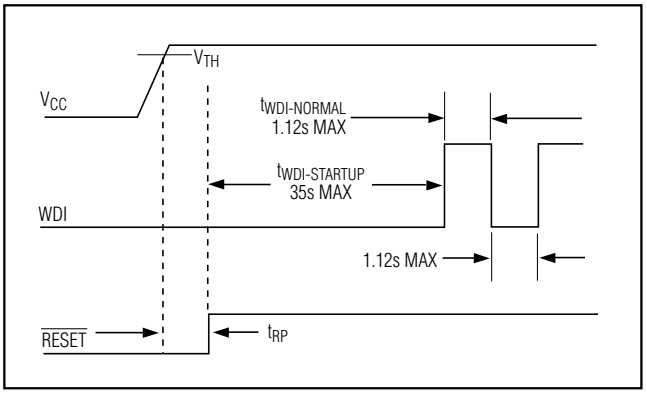

Figure 2. Normal Watchdog Startup Sequence

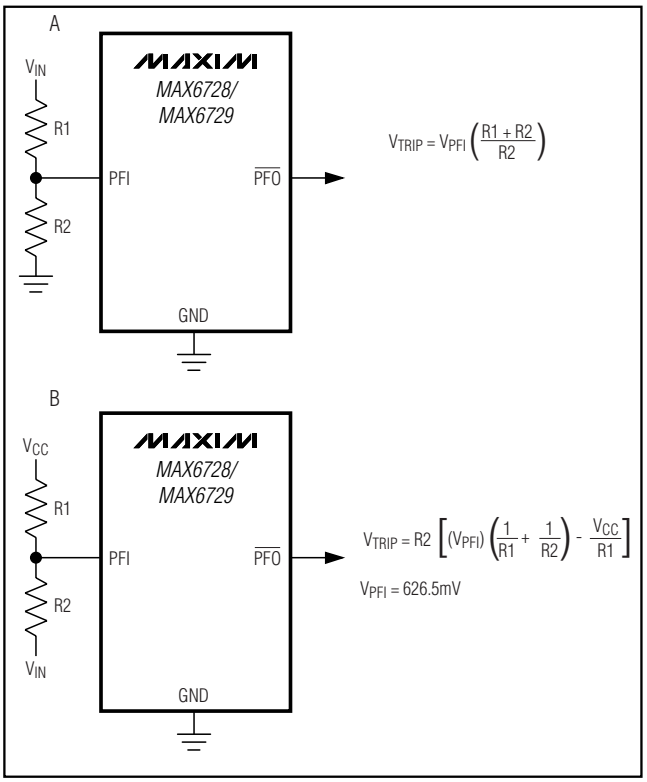

Figure 3. Using Power-Fail Input to Monitor an Additional Power-Supply a) V_{IN} is Positive b) V_{IN} is Negative

providing an early power-fail warning so software can conduct an orderly system shutdown. It can also be used to monitor supplies other than $V_{CC}1$ or $V_{CC}2$ by setting the power-fail threshold with a resistor-divider, as shown in Figure 3. PFI is the input to the power-fail comparator. The typical comparator delay is 2µs from PFI to $\overline{PFO}$. Connect PFI to ground of $V_{CC}1$ if unused.

Ensuring a Valid Reset Output Down to V_{CC} = 0

The MAX6715–MAX6729 are guaranteed to operate properly down to V_{CC} = 0.8V. In applications that require valid reset levels down to V_{CC} = 0 use a pull-down resistor at $\overline{RST}$ to ground. The resistor value used is not critical, but it must be large enough not to load the reset output when V_{CC} is above the reset threshold. For most applications, 100kΩ is adequate. This configuration does not work for the open-drain outputs of the MAX6715/MAX6717/MAX6719/MAX6721/MAX6723/MAX6725/MAX6727/MAX6728. For push-pull, active-high RST output connect the external resistor as a pullup from RST to $V_{CC}1$.

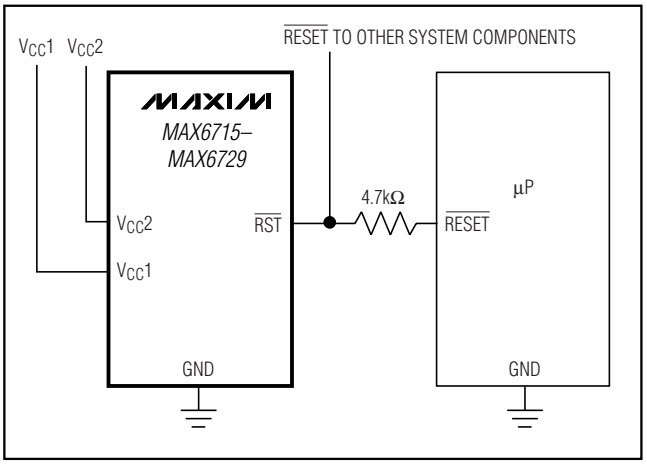

Figure 4. Interfacing to µPs with Bidirectional Reset I/O

Applications Information

Interfacing to µPs with Bidirectional Reset Pins

Most microprocessors with bidirectional reset pins can interface directly to open-drain $\overline{RST}$ output options. Systems simultaneously requiring a push-pull $\overline{RST}$ output and a bidirectional reset interface can be in logic contention. To prevent contention, connect a 4.7kΩ resistor between $\overline{RST}$ and the µP's reset I/O port as shown in Figure 4.

Adding Hysteresis to the Power-Fail Comparator

The power-fail comparator has a typical input hysteresis of 3mV. This is sufficient for most applications where a power-supply line is being monitored through an external voltage-divider (see the *Power-Fail Comparator* section). If additional noise margin is desired, connect a resistor between $\overline{PFO}$ and PFI as shown in Figure 5. Select the values of R1, R2, and R3 so PFI sees V_{PFI} (626mV) when V_{EXT} falls to its power-fail trip point (V_{FAIL}) and when VIN rises to its power-good trip point (V_{GOOD}). The hysteresis window extends between the specified V_{FAIL} and V_{GOOD} thresholds. R3 adds the additional hysteresis by sinking current from the R1/R2 divider network when $\overline{PFO}$ is logic low and sourcing current into the network when $\overline{PFO}$ is logic high. R3 is typically an order of magnitude greater than R1 or R2.

The current through R2 should be at least 2.5µA to ensure that the 25nA (max) PFI input current does not significantly shift the trip points. Therefore, R2 < V_{PFI}/2.5µA < 248kΩ for most applications. R3 will provide additional hysteresis for $\overline{PFO}$ push-pull (V_{OH} = $V_{CC}1$) or open-drain (V_{OH} = V_{PULLUP}) applications.

Dual/Triple Ultra-Low-Voltage SOT23 µP Supervisory Circuits

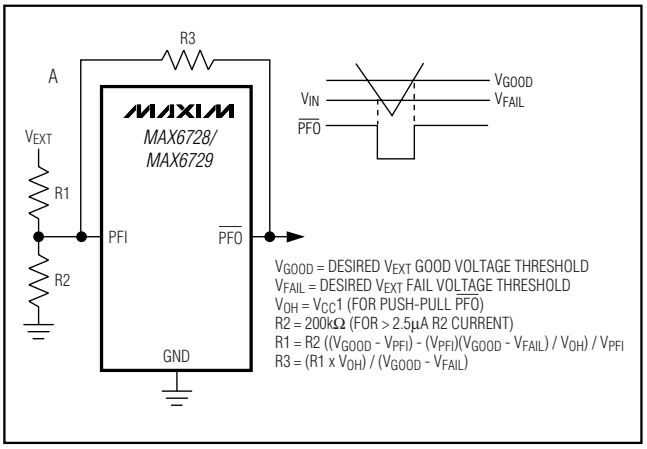

Figure 5. Adding Hysteresis to Power-Fail for Push-Pull PFO

Monitoring an Additional Power Supply

These µP supervisors can monitor either positive or negative supplies using a resistor voltage-divider to PFI. $\overline{PFO}$ can be used to generate an interrupt to the µP or cause reset to assert (Figure 3).

Monitoring a Negative Voltage

The power-fail comparator can be used to monitor a negative supply voltage using the circuit shown in Figure 3. When the negative supply is valid, $\overline{PFO}$ is low. When the negative supply voltage drops, $\overline{PFO}$ goes high. The circuit's accuracy is affected by the PFI threshold tolerance, V_{CC}, R1, and R2.

Negative-Going V_{CC} Transients

The MAX6715–MAX6729 supervisors are relatively immune to short-duration negative-going V_{CC} transients (glitches). It is usually undesirable to reset the µP when V_{CC} experiences only small glitches. The *Typical Operating Characteristics* show Maximum Transient Duration vs. Reset Threshold Overdrive, for which reset pulses are not generated. The graph was produced using negative-going V_{CC} pulses, starting above V_{TH} and ending below the reset threshold by the magnitude indicated (reset threshold overdrive). The graph shows the maximum pulse width that a negative-going V_{CC} transient may typically have without causing a reset pulse to be issued. As the amplitude of the transient increases (i.e., goes farther below the reset threshold), the maximum allowable pulse width decreases. A 0.1µF bypass capacitor mounted close to the V_{CC} pin provides additional transient immunity.

Watchdog Software Considerations

Setting and resetting the watchdog input at different points in the program, rather than "pulsing" the watchdog input high-low-high or low-high-low, helps the watchdog timer to closely monitor software execution. This technique avoids a "stuck" loop where the watchdog timer continues to be reset within the loop, keeping the watchdog from timing out. Figure 6 shows an example flow diagram where the I/O driving the watchdog input is set high at the beginning of the program, set low at the beginning of every subroutine or loop, then set high again when the program returns to the beginning. If the program should "hang" in any subroutine, the I/O is continually set low and the watchdog timer is allowed to time out, causing a reset or interrupt to be issued.

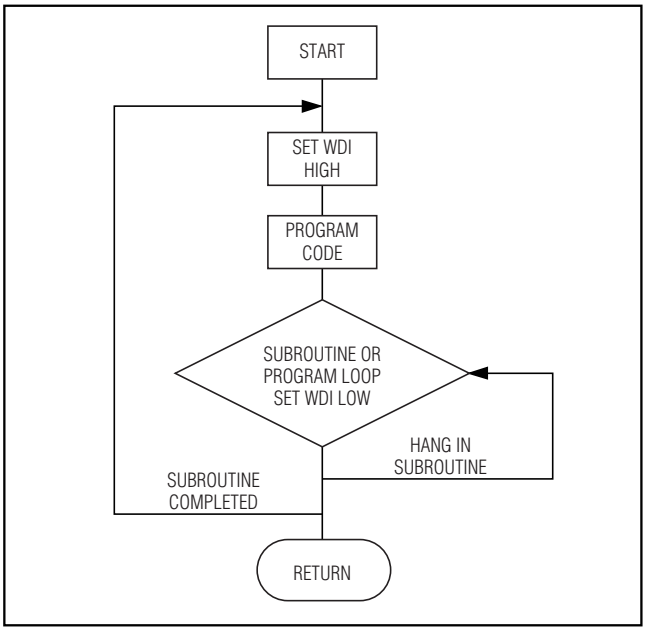

Figure 6. Watchdog Flow Diagram

Chip Information

TRANSISTOR COUNT: 1072

PROCESS: BiCMOS

Functional Diagram

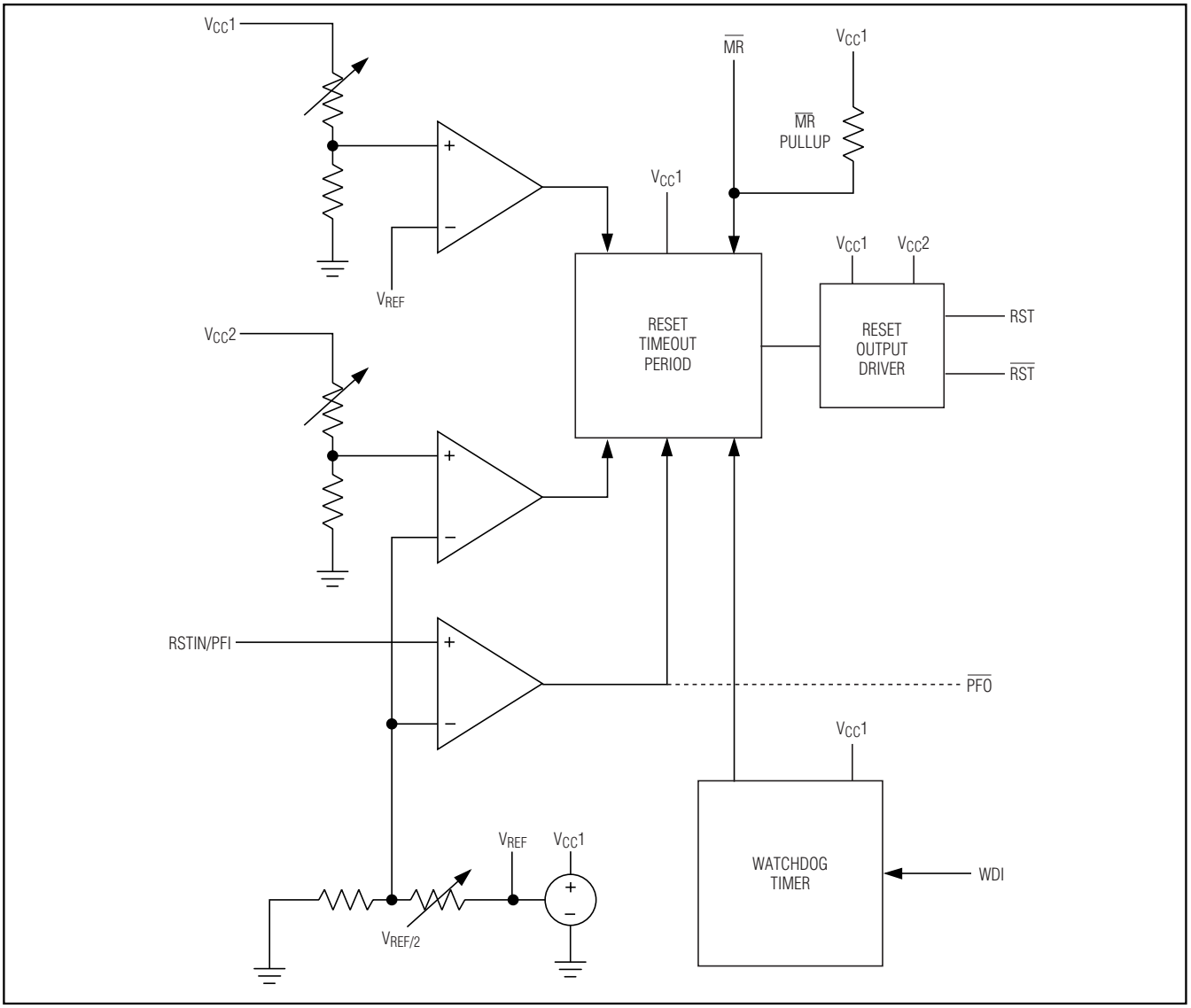

Dual/Triple Ultra-Low-Voltage SOT23 µP Supervisory Circuits

Selector Guide

PART NUMBER	NUMBER OF VOLTAGE MONITORS	OPEN-DRAIN $\overline{\text{RESET}}$	OPEN-DRAIN RESET	PUSH-PULL $\overline{\text{RESET}}$	PUSH-PULL RESET	MANUAL RESET	WATCH-DOG INPUT	POWER-FAIL INPUT/ OUTPUT
MAX6715	2	2	—	—	—	√	—	—
MAX6716	2	—	—	2	—	√	—	—
MAX6717	2	1	—	—	—	√	—	—
MAX6718	2	—	—	1	—	√	—	—
MAX6719	3	1	—	—	—	√	—	—
MAX6720	3	—	—	1	—	√	—	—
MAX6721	2	1	—	—	—	√	√	—
MAX6722	2	—	—	1	—	√	√	—
MAX6723	3	1	—	—	—	—	√	—
MAX6724	3	—	—	1	—	—	√	—
MAX6725	3	1	1	—	—	√	√	—
MAX6726	3	—	—	1	1	√	√	—
MAX6727	3	2	—	—	—	√	√	—
MAX6728	3	1	—	—	—	√	√	√ (open drain)
MAX6729	3	—	—	1	—	√	√	√ (push-pull)

Ordering Information (continued)

PART	TEMP RANGE	PIN-PACKAGE
MAX6721UT_ _D_ -T	-40°C to +85°C	6 SOT23-6
MAX6722UT_ _D_ -T	-40°C to +85°C	6 SOT23-6
MAX6723UT_ _D_ -T	-40°C to +85°C	6 SOT23-6
MAX6724UT_ _D_ -T	-40°C to +85°C	6 SOT23-6
MAX6725KA_ _D_ -T	-40°C to +85°C	8 SOT23-8
MAX6726KA_ _D_ -T	-40°C to +85°C	8 SOT23-8
MAX6727KA_ _D_ -T	-40°C to +85°C	8 SOT23-8
MAX6728KA_ _D_ -T	-40°C to +85°C	8 SOT23-8
MAX6729KA_ _D_ -T	-40°C to +85°C	8 SOT23-8

Note: *The first "_ _" are placeholders for the threshold voltage levels of the devices. Desired threshold levels are set by the part number suffix found in the Reset Voltage Threshold Suffix Guide. The "_" after the D is a placeholder for the reset timeout delay time. Desired delay time is set using the timeout period suffix found in the Reset Timeout Period Suffix Guide. For example the MAX6716UTLTD3-T is a dual-voltage supervisor $V_{TH}1$ = 4.625V, $V_{TH}2$ = 3.075V, and 210ms (typ) timeout period.*

Devices are available in both leaded and lead-free packaging. Specify lead-free by replacing "-T" with "+T" when ordering.

Table 1. Reset Voltage Threshold Suffix Guide**

PART NUMBER SUFFIX (_ _)	$V_{CC}1$ NOMINAL VOLTAGE THRESHOLD (V)	$V_{CC}2$ NOMINAL VOLTAGE THRESHOLD (V)
LT	**4.625**	**3.075**
MS	4.375	2.925
MR	4.375	2.625
TZ	3.075	2.313
SY	**2.925**	**2.188**
RY	2.625	2.188
TW	3.075	1.665
SV	**2.925**	**1.575**
RV	**2.625**	**1.575**
TI	3.075	1.388
SH	**2.925**	**1.313**
RH	2.625	1.313
TG	**3.075**	**1.110**
SF	2.925	1.050
RF	2.625	1.050
TE	3.075	0.833
SD	**2.925**	**0.788**
RD	2.625	0.788
ZW	**2.313**	**1.665**
YV	2.188	1.575
ZI	2.313	1.388
YH	**2.188**	**1.313**
ZG	**2.313**	**1.110**
YF	2.188	1.050
ZE	2.313	0.833
YD	**2.188**	**0.788**
WI	1.665	1.388
VH	**1.575**	**1.313**
WG	**1.665**	**1.110**
VF	1.575	1.050
WE	1.665	0.833
VD	**1.575**	**0.788**

Standard versions are shown in bold and are available in a D3 timeout option only. Standard versions require 2,500 piece order increments and are typically held in sample stock. There is a 10,000 order increment on nonstandard versions.* ***Other threshold voltages may be available, contact factory for availability.

Table 2. Reset Timeout Period Suffix Guide

TIMEOUT PERIOD SUFFIX	ACTIVE TIMEOUT PERIOD	
	MIN [ms]	MAX [ms]
D1	1.1	2.2
D2	8.8	17.6
D3	140	280
D5	280	560
D6	560	1120
D4	1120	2240

Dual/Triple Ultra-Low-Voltage SOT23 µP Supervisory Circuits

Pin Configurations

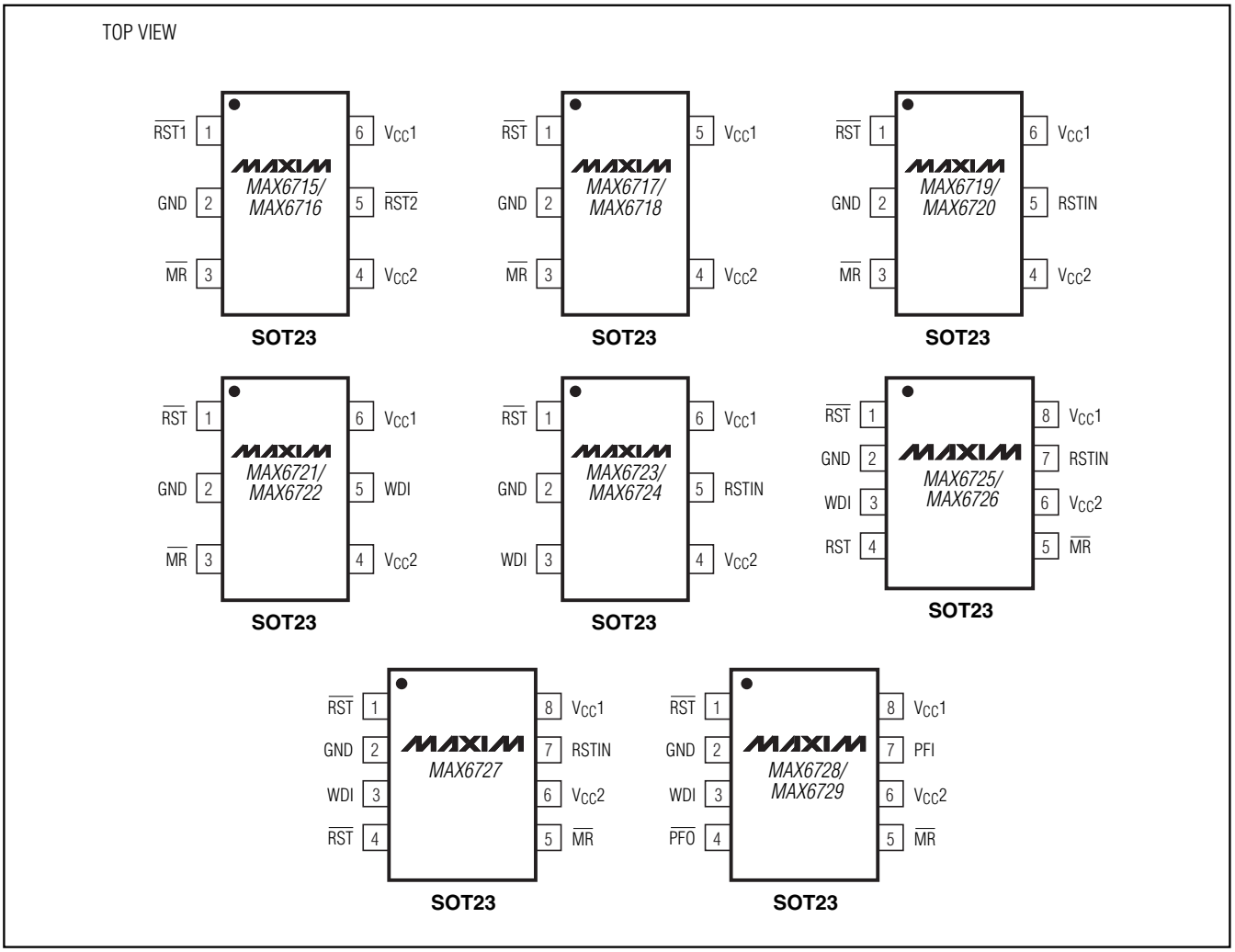

Package Information

(The package drawing(s) in this data sheet may not reflect the most current specifications. For the latest package outline information go to **www.maxim-ic.com/packages**.)

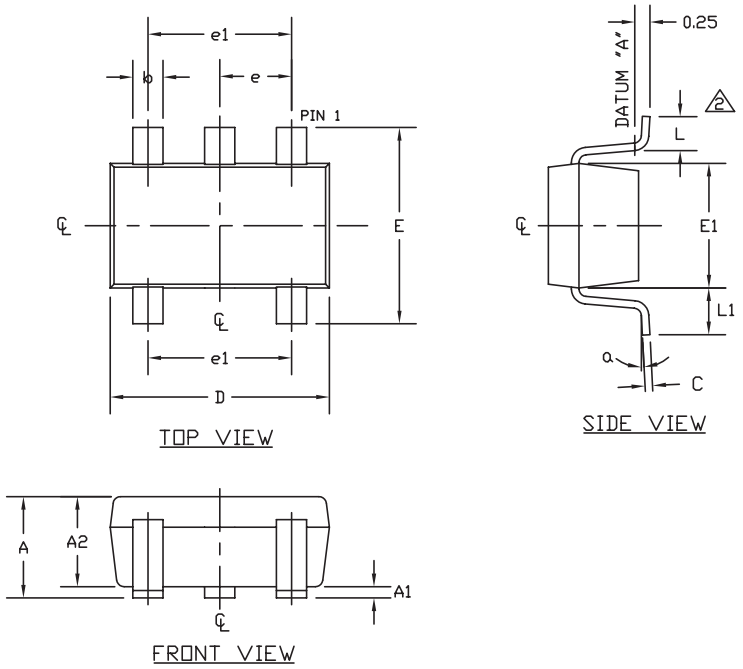

SYMBOL	MIN	MAX
A	0.90	1.45
A1	0.00	0.15
A2	0.90	1.30
b	0.35	0.50
C	0.08	0.20
D	2.80	3.00
E	2.60	3.00
E1	1.50	1.75
L	0.35	0.60
L1	0.60 REF	
e	0.95 BSC.	
e1	1.90 BSC.	
a	0°	8°

SOT-23 5L .EPS

NOTES:
1. ALL DIMENSIONS ARE IN MILLIMETERS.
2. FOOT LENGTH MEASURED AT INTERCEPT POINT BETWEEN DATUM A & LEAD SURFACE.
3. PACKAGE OUTLINE EXCLUSIVE OF MOLD FLASH & METAL BURR. MOLD FLASH, PROTRUSION OR METAL BURR SHOULD NOT EXCEED 0.25 MM.
4. PACKAGE OUTLINE INCLUSIVE OF SOLDER PLATING.
5. MEETS JEDEC MO178, VARIATION AA.
6. LEADS TO BE COPLANAR WITHIN 0.10 mm.
7. SOLDER THICKNESS MEASURED AT FLAT SECTION OF LEAD BETWEEN 0.08mm AND 0.15mm FROM LEAD TIP.

DALLAS SEMICONDUCTOR MAXIM
PROPRIETARY INFORMATION

TITLE: PACKAGE OUTLINE, SOT-23, 5L

APPROVAL	DOCUMENT CONTROL NO.	REV.	
	21-0057	E	1/1

Dual/Triple Ultra-Low-Voltage SOT23 µP Supervisory Circuits

Package Information (continued)

(The package drawing(s) in this data sheet may not reflect the most current specifications. For the latest package outline information go to **www.maxim-ic.com/packages**.)

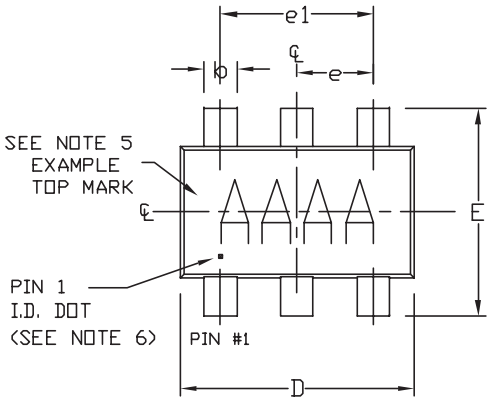

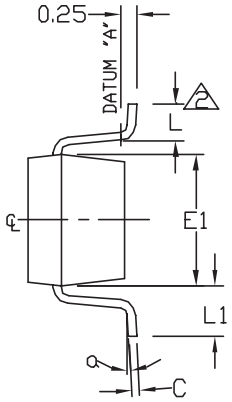

SYMBOL	MIN	MAX
A	0.90	1.45
A1	0.00	0.15
A2	0.90	1.30
b	0.35	0.50
C	0.08	0.20
D	2.80	3.00
E	2.60	3.00
E1	1.50	1.75
L	0.35	0.60
L1	0.60 REF.	
e1	1.90 BSC.	
e	0.95 BSC.	
a	0°	10°

6LSOT.EPS

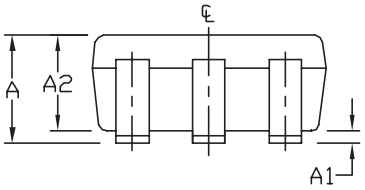

NOTES:
1. ALL DIMENSIONS ARE IN MILLIMETERS.
2. FOOT LENGTH MEASURED AT INTERCEPT POINT BETWEEN DATUM A & LEAD SURFACE.
3. PACKAGE OUTLINE EXCLUSIVE OF MOLD FLASH & METAL BURR. MOLD FLASH, PROTRUSION OR METAL BURR SHOULD NOT EXCEED 0.25 MM.
4. PACKAGE OUTLINE INCLUSIVE OF SOLDER PLATING.
5. PIN 1 IS LOWER LEFT PIN WHEN READING TOP MARK FROM LEFT TO RIGHT. (SEE EXAMPLE TOP MARK)
6. PIN 1 I.D. DOT IS 0.3 MM Ø MIN. LOCATED ABOVE PIN 1.
7. MEETS JEDEC MO178, VARIATION AB.
8. SOLDER THICKNESS MEASURED AT FLAT SECTION OF LEAD BETWEEN 0.08mm AND 0.15mm FROM LEADTIP.
9. LEAD TO BE COPLANAR WITHIN 0.1 MM.

-DRAWING NOT TO SCALE-

DALLAS SEMICONDUCTOR MAXIM

TITLE: PACKAGE OUTLINE, SOT 6L BODY

APPROVAL	DOCUMENT CONTROL NO.	REV.	
	21-0058	G	1/1

Package Information (continued)

(The package drawing(s) in this data sheet may not reflect the most current specifications. For the latest package outline information go to **www.maxim-ic.com/packages**.)

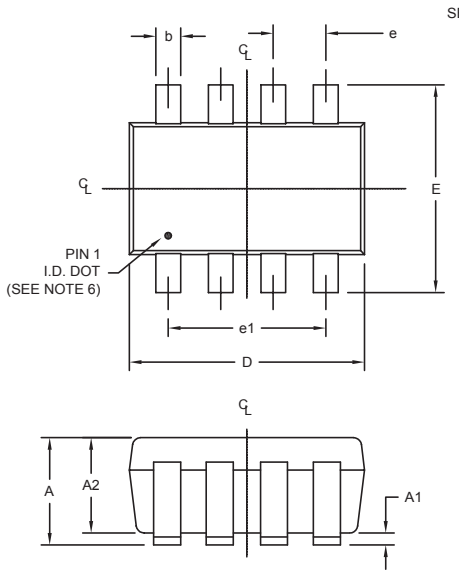

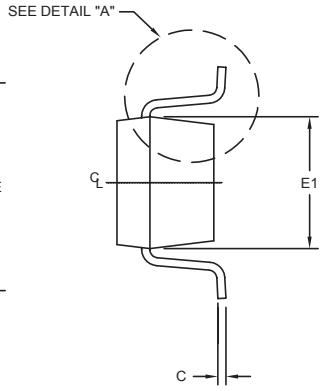

SYMBOL	MIN	MAX
A	0.90	1.45
A1	0.00	0.15
A2	0.90	1.30
b	0.28	0.45
C	0.09	0.20
D	2.80	3.00
E	2.60	3.00
E1	1.50	1.75
L	0.30	0.60
L2	0.25 BSC.	
e	0.65 BSC.	
e1	1.95 REF.	
θ	0∞	8∞

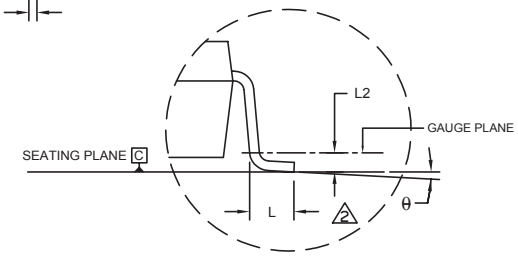

DETAIL "A"

NOTE:

1. ALL DIMENSIONS ARE IN MILLIMETERS.
2. FOOT LENGTH MEASURED FROM LEAD TIP TO UPPER RADIUS OF HEEL OF THE LEAD PARALLEL TO SEATING PLANE C.
3. PACKAGE OUTLINE EXCLUSIVE OF MOLD FLASH & METAL BURR.
4. PACKAGE OUTLINE INCLUSIVE OF SOLDER PLATING.
5. COPLANARITY 4 MILS. MAX.
6. PIN 1 I.D. DOT IS 0.3 MM ÿ MIN. LOCATED ABOVE PIN 1.
7. SOLDER THICKNESS MEASURED AT FLAT SECTION OF LEAD BETWEEN 0.08mm AND 0.15mm FROM LEAD TIP.
8. MEETS JEDEC MO178.

SOT23, 8L .EPS

DALLAS SEMICONDUCTOR MAXIM

PROPRIETARY INFORMATION

TITLE: PACKAGE OUTLINE, SOT-23, 8L BODY

APPROVAL	DOCUMENT CONTROL NO.	REV.	
	21-0078	D	1/1

Maxim cannot assume responsibility for use of any circuitry other than circuitry entirely embodied in a Maxim product. No circuit patent licenses are implied. Maxim reserves the right to change the circuitry and specifications without notice at any time.

© 2005 Maxim Integrated Products Printed USA MAXIM is a registered trademark of Maxim Integrated Products, Inc.

Компания «ЭлектроПласт» предлагает заключение долгосрочных отношений при поставках импортных электронных компонентов на взаимовыгодных условиях!

Наши преимущества:

- Оперативные поставки широкого спектра электронных компонентов отечественного и импортного производства напрямую от производителей и с крупнейших мировых складов;
- Поставка более 17-ти миллионов наименований электронных компонентов;
- Поставка сложных, дефицитных, либо снятых с производства позиций;
- Оперативные сроки поставки под заказ (от 5 рабочих дней);
- Экспресс доставка в любую точку России;
- Техническая поддержка проекта, помощь в подборе аналогов, поставка прототипов;
- Система менеджмента качества сертифицирована по Международному стандарту ISO 9001;
- Лицензия ФСБ на осуществление работ с использованием сведений, составляющих государственную тайну;
- Поставка специализированных компонентов (Xilinx, Altera, Analog Devices, Intersil, Interpoint, Microsemi, Aeroflex, Peregrine, Syfer, Eurofarad, Texas Instrument, Miteq, Cobham, E2V, MA-COM, Hittite, Mini-Circuits,General Dynamics и др.);

Помимо этого, одним из направлений компании «ЭлектроПласт» является направление «Источники питания». Мы предлагаем Вам помощь Конструкторского отдела:

- Подбор оптимального решения, техническое обоснование при выборе компонента;
- Подбор аналогов;
- Консультации по применению компонента;
- Поставка образцов и прототипов;
- Техническая поддержка проекта;
- Защита от снятия компонента с производства.

Как с нами связаться

Телефон: 8 (812) 309 58 32 (многоканальный)
Факс: 8 (812) 320-02-42
Электронная почта: org@eplast1.ru
Адрес: 198099, г. Санкт-Петербург, ул. Калинина, дом 2, корпус 4, литера А.