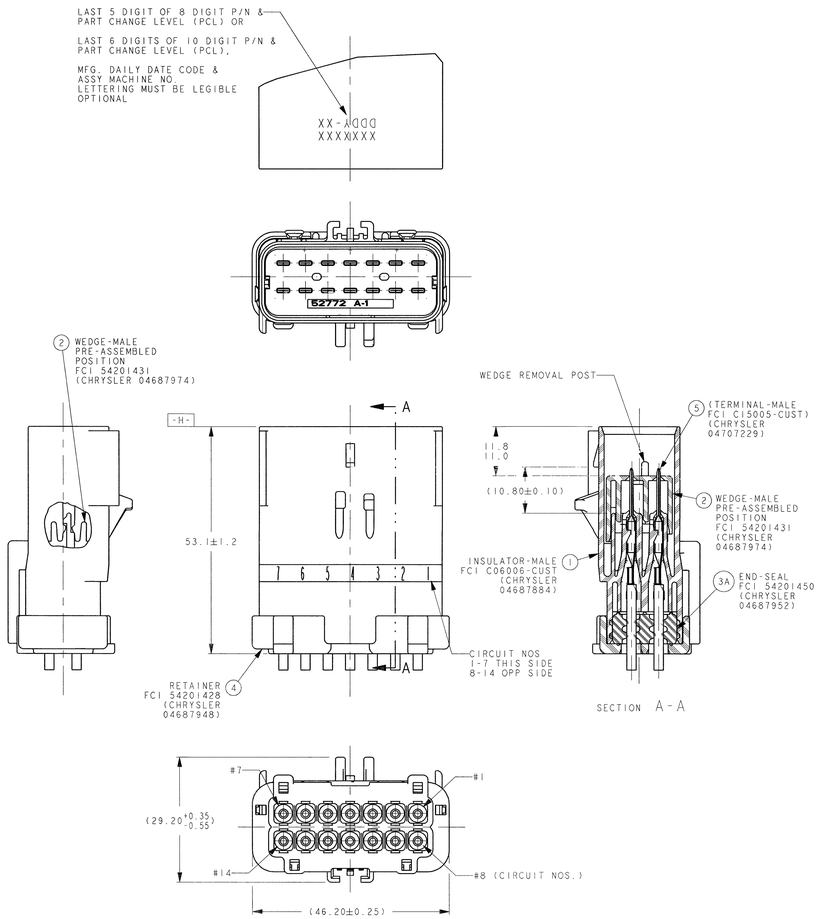

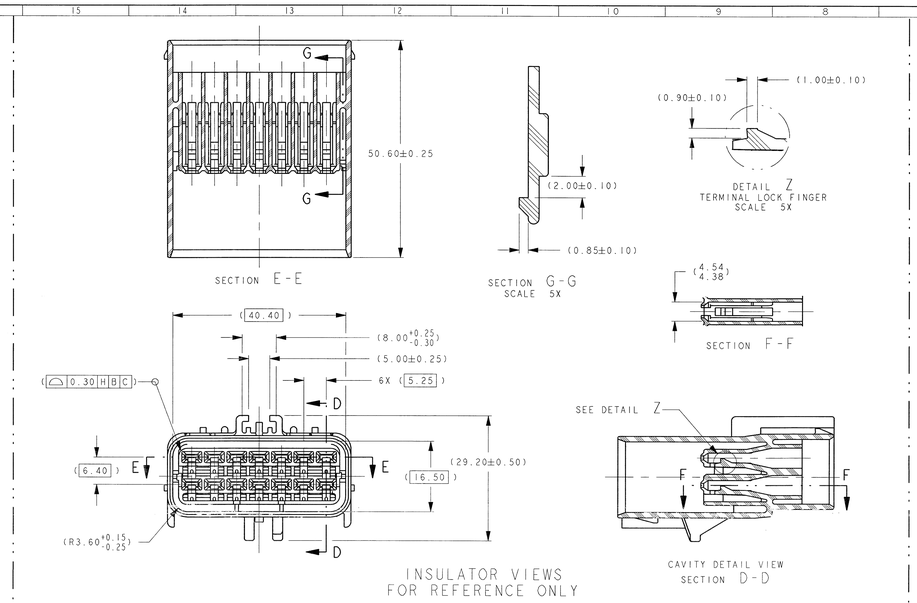

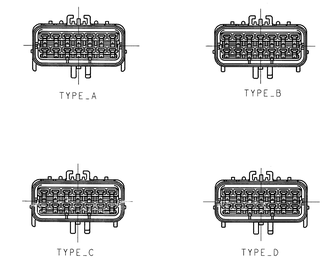

POLARIZATION OPTIONS
FULL SIZE

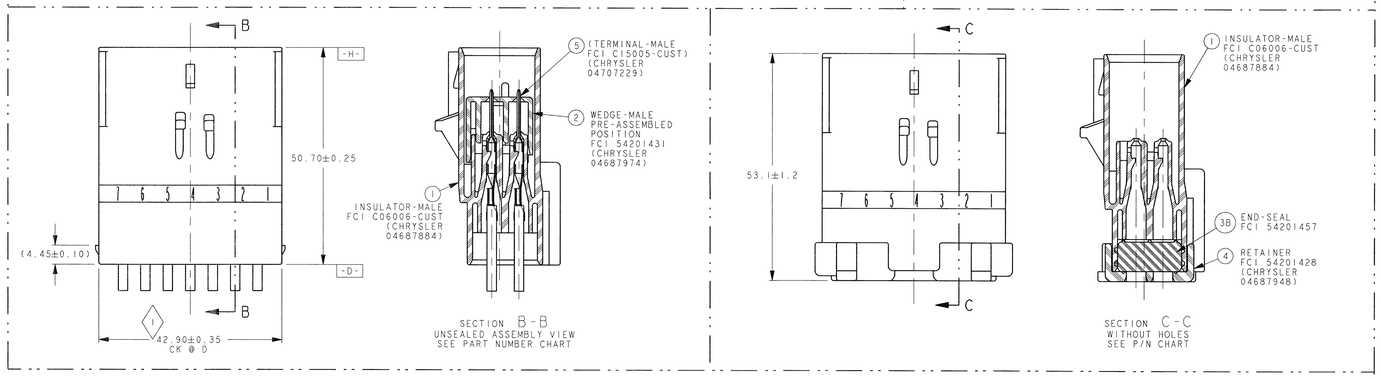

NOTES:

1. QUALITY ASSURANCE REQUIREMENTS PER CHRYSLER PS-7300: 1 SPC DATA REQUIRED
2. ENGINEERING APPROVAL OF SUPPLIER SAMPLES IS REQUIRED PRIOR TO AUTHORIZATION OF PART PRODUCTION
3. CHANGES IN DESIGN COMPOSITION OR PROCESSING FROM THE PART PREVIOUSLY APPROVED FOR PART PRODUCTION REQUIRES PRIOR ENGINEERING APPROVAL
4. WIRING FABRICATORS MUST PURCHASE FROM SOURCES SHOWN
5. ALL THE SEALED CONNECTOR APPLICATIONS MAY BE USED WITH CHRYSLER WIRE SPEC. MS-8288 OR MS-9502 THIN WALL X-LINK 20,18, 16 & 14 GAGE WIRES ONLY UNLESS OTHERWISE SPECIFIED SEE CHART (WIRE INSULATIONS Ø1.70 MIN TO Ø3.35 MAX)
6. ALL NON-SEALED APPLICATIONS MAY BE USED WITH ANY WIRE INSULATION 22 GAGE THRU 10 GAGE (EXCEPT AS NOTED) PROVIDING THAT A TERMINAL GRIP FOR THAT CORE/INSULATION COMBINATION IS SHOWN ON THE MALE TERMINAL DRAWING

   NOTE: MAX. INSULATION CRIMP WIDTH = 4.50
   MAX. INSULATION CRIMP HEIGHT = 4.50
   MAX. INSULATION CRIMP DIA. = 4.09 (10 GA THIN WALL)
7. USE WITH CAVITY PLUG FCI P/N 54200005 (CHRYSLER P/N 56038308) WHEN REQ'D
   USE WITH DOUBLE X-MAS TREE CLIP FCI P/N 54200010 W/FORWARD STOP WHEN REQ'D
   USE WITH DOUBLE X-MAS TREE CLIP CHRYSLER P/N 04707091 WHEN REQUIRED
   USE WITH SINGLE X-MAS TREE CLIP CHRYSLER P/N 04625797 WHEN REQUIRED
   USE WITH 2.80MM APEX MALE TERM PER C15005-CUST SYM ABOUT CENTERLINE FOR 180° ORIENTATION
8. DIRECT CONNECT DRAWING NO. FCI G36014 (CHRYSLER 04707029)
9. TEST METHOD PER SAE/USCAR-2 REV.5, CONNECTOR ENGAGE & DISENGAGE WITH FEMALE LATCH DEPRESSED FORCE NOT TO EXCEED 142 N [32LBS/PF-752(T)] FOR THIS SYSTEM
   PRESSURE 3 PSI (22 KPA) PER TEST PF-752(T)

   WEDGE SEATING FORCES - 150 N MAX

   X-MAS TREE CLIP INSERTION FORCES - 75 N MAX
10. SUPPLIER, MOLD & CAVITY I.D. SIGNIFIES TOOL OWNERSHIP, FOR REFERENCE
11. ANNUAL QUALITY REQUIREMENTS:
    IT IS PERMISSIBLE TO PERFORM CONTINUOUS CONFORMANCE PER FCI SPECIFICATION #AQA-001 INSTEAD OF ANNUAL LAYOUT & ANNUAL PV REQUIREMENTS OF QS-9000 SECTION 2 & PF-9600

    ALL NON-REFERENCE DIMENSIONS ARE REQUIRED

    - USE INDEX A, BLACK SEALED AND UNSEALED FOR ALL AFFECTED INSULATOR CAVITIES

    - CURRENT PRODUCTION TOOLING

    - POINT OF LAST RUN

    SERVICE TOOLING GUIDE INFORMATION PER APEX TRAINING MANUAL
12. MUST CONFORM TO THE FOLLOWING CHRYSLER/YNA STANDARDS:
    1. PF9600
    2. PS-7300 QUALITY ASSURANCE (CHRYSLER)
    3. MS-9502 SEAL APPL. 150 °C
    4. MS-8288 SEAL APPL. 125 °C
    5. PS-9227 DATA EXCHANGE (CHRYSLER), (G009-7 YNA)
    6. PS-10052 INFORMATION SECURITY (CHRYSLER)
13. THIS DRAWING (H59016) REPLACES CHRYSLER DRAWING NUMBER 04687887 LEVEL "H"
    CHRYSLER DRAWING IS FOR REFERENCE ONLY FOR PREVIOUS CHANGES

MATING PART NUMBER CHART

D	LT GREEN	UNSEALED	DIRECT CONNECT APPLICATION			54201452N	N/A	N/A
		UNSEALED	DIRECT CONNECT APPLICATION			54201452	04868345AA	N/A
	NATURAL	UNSEALED	DIRECT CONNECT APPLICATION			54201403N	N/A	N/A
		UNSEALED	DIRECT CONNECT APPLICATION			54201403	04687932	7283-4649
		SEALED	54201464	N/A	N/A	54201414	04687928	7283-4749
		SEALED	54201418	N/A	N/A	54201414N	N/A	N/A
		SEALED	54201418	04707243	N/A	54201414	04687928	7283-4749
C	DK GREY	UNSEALED	DIRECT CONNECT APPLICATION			54201402N	N/A	N/A
		UNSEALED	DIRECT CONNECT APPLICATION			54201402	04687931	7283-4648-10
		SEALED	54201463	N/A	N/A	54201413	04687927	7283-4748-10
		SEALED	54201417	N/A	N/A	54201413N	N/A	N/A
		SEALED	54201417	04707241	N/A	54201413	04687927	7283-4748-10
B	LT GREY	UNSEALED	DIRECT CONNECT APPLICATION			54201453N	N/A	N/A
		UNSEALED	DIRECT CONNECT APPLICATION			54201453	N/A	7283-4747-40 (E0001361)
		UNSEALED	54201405	N/A	N/A	54201401N	N/A	N/A
		UNSEALED	54201405	04687936	N/A	54201401	04687930	7283-4647-40
		SEALED	54201462	N/A	N/A	54201412	04687926	7283-4645-40
		SEALED	54201416	N/A	N/A	54201412N	N/A	N/A
		SEALED	54201416	04687934	N/A	54201412	04687926	7283-4645-40
A	BLACK	UNSEALED	54201404	N/A	N/A	54201442N	N/A	N/A
		UNSEALED	54201404	04687935	N/A	54201442	04868197AA	N/A
		UNSEALED	54201404	N/A	N/A	54201400N	N/A	N/A
		UNSEALED	54201404	04687935	N/A	54201400	04687929	7283-4644-30
		SEALED	54201459	N/A	N/A	54201411	04687925	7283-4641-30
		SEALED	54201415	04687933	N/A	54201411	04687925	7283-4641-30
		SEALED	54201415	04687933	N/A	54201419N	*04707442	7283-4746-30
		SEALED	54201415	04687933	N/A	54201443	*04759591AA	7283-4341-30
		SEALED	54201415	04687933	N/A	54201445N	04707405	N/A
		SEALED	54201415	04687933	N/A	54201456N	N/A	N/A
INDEX TYPE	COLOR	SEALED/ UNSEALED	FCI	(CHRYSLER)	YNA	FCI	(CHRYSLER)	YNA
			CHRYSLER APPLICATION			MATING ASSEMBLY PART NUMBERS FOR REFERENCE ONLY		
			MALE ASSEMBLY PART NUMBERS					

CHART-ASSEMBLY PART NUMBERS

	UNSEALED				SEALED							
NON-CHRYSLER P/N'S	N/A	N/A	-------	N/A	GM15125233	N/A	N/A	N/A	N/A	N/A	N/A	N/A
CHRYSLER P/N'S	04687935	04687936	-------	N/A	04687933	04687934	04707241	04707243	N/A	N/A	N/A	N/A
FCI P/N'S	54201404	54201405	-------	54201468	54201415	54201416	54201417	54201418	54201459	54201462	54201463	54201464
	REQUIRED				REQUIRED							

REQUIRED				REQUIRED								ITEM	FCI P/N	(CHRYSLER P/N)	PART NAME	MATERIAL
1				1				1				1	54201424	04687803	INS-MALE INDEX A; BLK	NYLON 66
	1				1				1			1	54201425	04687947	INS-MALE INDEX B; LT GREY	NYLON 66
						1				1		1	54201426	04707239	INS-MALE INDEX C; DK GREY	NYLON 66
			1				1				1	1	54201427	04707240	INS-MALE INDEX D; NATURAL	NYLON 66
1	1		1	1	1	1	1					2	54201431	04687974	WEDGE-MALE; RED	NYLON 66
				1	1	1	1					3A	54201450	04687952	END SEAL; LT BLUE (20, 18, 16 & 14AWG)	SILICONE
								1	1	1	1	3B	54201457	(**93008014)	END SEAL; BRT YELLOW (NO HOLES)	SILICONE
				1	1	1	1	1	1	1	1	4	54201428	04687948	RETAINER; BLACK	NYLON 66
3	3		3	3	3	3	3	3	3	3	3		CONNECTOR ASSEMBLY TEMPERATURE CLASS PER SAE/USCAR-2 REV.5			
E	G		K	G	F	G	K	G	J	J	J		PART CHANGE LEVEL (PCL)			

FCI	52772 OR 52772 H	SEE CHART	
VENDOR	VENDOR CODE	PCL	

FCI - FRAMATOME CONNECTORS INTERNATIONAL
YNA - YAZAKI NORTH AMERICA

** INTERLOCK P/N

10481	6-30-08	K3	E15,E16	SEALED AND UNSEALED CABLES CORRECTED WIRE SWITCHES USE WITH 2.80MM APEX MALE TERMINAL NOTE	ASHOK SSS SSS
10200	6-05-08	K2	E8	ADD NOTE 12 PER PS-7300	ANSU SSS SSS
-	-	-	ALL	REDRAWN ON NEW FCI TITLE BLOCK. SEE REV "K1" FOR PREVIOUS CHANGES. DCA REPLACED BY CHRYSLER	- - -
ECN NUMBER	DATE M-D-YY	REVISION	ZONE	CHANGE DESCRIPTION	DRAWN BY CHK. BY APPR. BY

PROJECT SPEC. — PACKAGING SPEC. — APPLICATION SPEC.

APEX 2.80MM

THIS DRAWING AND ALL OTHER INFORMATION CONTAINED THEREIN IS PROPRIETARY AND THE PROPERTY OF FCI. This drawing may not be copied, reproduced or disclosed to any third party without the expressed written permission of FCI. (C) FCI April 1999

TOLERANCES: 1 PLACE DIM ±0.25; 2 PLACE DIM ±0.10; ANGULAR DIM ±2°

CONTRACT NO. H59008 — MATERIAL: NOTED ON COMPONENT PRINTS — SURFACE FINISH: - — COLOR: - — DO NOT SCALE DRAWING — TOOL NO. A041 — DOD Lnk. Code NA

DRAWN 01/05/05 RAJKUMAR
CHECKED 01/05/05 SUCHA SIAN
APPROVED 01/05/05 SUCHA SIAN

TITLE: CHART ASSEMBLY
14 WAY MALE
(2.80MM APEX CONNECTOR SYSTEM)

DRAWING NUMBER: H59016 — SHEET 1 OF 1

DIMENSION IN MILLIMETERS — DRAW ANGLE pro / eng — DWG SIZE A0 — SCALE 2:1

SOR NO. WT-225, 6243 EXT. NO. - — FILE NAME H59016.DWG

(SEE TABLE)	---------	----	---	---------
PART NUMBER FCI	PART NUMBER	REV DATE	REV	DRAWING NUMBER
CUSTOMER				

Компания «ЭлектроПласт» предлагает заключение долгосрочных отношений при поставках импортных электронных компонентов на взаимовыгодных условиях!

Наши преимущества:

- Оперативные поставки широкого спектра электронных компонентов отечественного и импортного производства напрямую от производителей и с крупнейших мировых складов;
- Поставка более 17-ти миллионов наименований электронных компонентов;
- Поставка сложных, дефицитных, либо снятых с производства позиций;
- Оперативные сроки поставки под заказ (от 5 рабочих дней);
- Экспресс доставка в любую точку России;
- Техническая поддержка проекта, помощь в подборе аналогов, поставка прототипов;
- Система менеджмента качества сертифицирована по Международному стандарту ISO 9001;
- Лицензия ФСБ на осуществление работ с использованием сведений, составляющих государственную тайну;
- Поставка специализированных компонентов (Xilinx, Altera, Analog Devices, Intersil, Interpoint, Microsemi, Aeroflex, Peregrine, Syfer, Eurofarad, Texas Instrument, Miteq, Cobham, E2V, MA-COM, Hittite, Mini-Circuits,General Dynamics и др.);

Помимо этого, одним из направлений компании «ЭлектроПласт» является направление «Источники питания». Мы предлагаем Вам помощь Конструкторского отдела:

- Подбор оптимального решения, техническое обоснование при выборе компонента;
- Подбор аналогов;
- Консультации по применению компонента;
- Поставка образцов и прототипов;
- Техническая поддержка проекта;
- Защита от снятия компонента с производства.

Как с нами связаться

Телефон: 8 (812) 309 58 32 (многоканальный)
Факс: 8 (812) 320-02-42
Электронная почта: org@eplast1.ru
Адрес: 198099, г. Санкт-Петербург, ул. Калинина, дом 2, корпус 4, литера А.