19-5212; Rev 4/10

DS1705/DS1706
3.3V and 5.0V MicroMonitor

www.maxim-ic.com

FEATURES

- Halts and restarts an out-of-control microprocessor
- Holds microprocessor in check during power transients
- Automatically restarts microprocessor after power failure
- Monitors pushbutton for external override
- Accurate 5%, 10% or 20% resets for 3.3V systems and 5% or 10% resets for 5.0V systems
- Eliminates the need for discrete components
- 3.3V 20% tolerance for use with 3.0V systems
- Pin-compatible with the MAXIM MAX705/MAX706 in 8-pin DIP, 8-pin SOIC, and µ-SOP
- 8-pin DIP, 8-pin SOIC and 8-pin µ-SOP packages
- Industrial temperature range -40°C to +85°C

PIN ASSIGNMENT

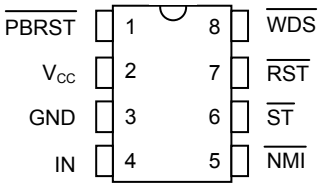

8-Pin DIP (300 -mil)

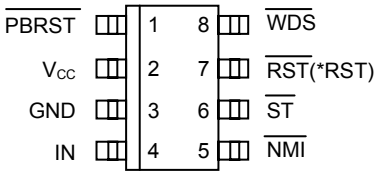

8-Pin SOIC (150-mil)

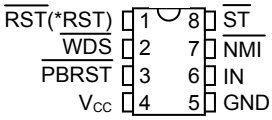

8-Pin µ-SOP (118-mil)
See Mech. Drawings Section on website

DS1705 and DS1706_R/S/T
(*DS1706L and DS1706P)

PIN DESCRIPTION

$\overline{\text{PBRST}}$	- Pushbutton Reset Input
V_{CC}	- Power Supply
GND	- Ground
IN	- Input
$\overline{\text{NMI}}$	- Non-maskable Interrupt
$\overline{\text{ST}}$	- Strobe Input
$\overline{\text{RST}}$	- Active Low Reset Output
*RST	- Active High Reset Output (DS1706P and DS1706L only)
$\overline{\text{WDS}}$	- Watchdog Status Output

DESCRIPTION

The DS1705/DS1706 3.3- or 5.0-Volt MicroMonitor monitors three vital conditions for a microprocessor: power supply, software execution, and external override. A precision temperature compensated reference and comparator circuit monitor the status of V_{CC} at the device and at an upstream point for maximum protection. When the sense input detects an out-of-tolerance condition, a non-maskable interrupt is generated. As the voltage at the device degrades, an internal power fail signal is generated which forces

the reset to an active state. When V_{CC} returns to an in-tolerance condition, the reset signal is kept in the active state for a minimum of 130 ms to allow the power supply and processor to stabilize.

The second function the DS1705/DS1706 performs is pushbutton reset control. The DS1705/DS1706 debounces the pushbutton input and guarantees an active reset pulse width of 130 ms minimum.

The third function is a watchdog timer. The DS1705/DS1706 has an internal timer that forces the $\overline{WDS}$ output signal to the active state if the strobe input is not driven low prior to time-out.

OPERATION

Power Monitor

The DS1705/DS1706 detects out-of-tolerance power supply conditions and warns a processor-based system of impending power failure. When V_{CC} falls below the minimum V_{CC} tolerance, a comparator outputs the $\overline{RST}$ (or RST) signal. $\overline{RST}$ (or RST) is an excellent control signal for a microprocessor, as processing is stopped at the last possible moment of valid V_{CC}. On power-up, $\overline{RST}$ (or RST) are kept active for a minimum of 130 ms to allow the power supply and processor to stabilize.

Pushbutton Reset

The DS1705/DS1706 provides an input pin for direct connection to a pushbutton reset (see Figure 2). The pushbutton reset input requires an active low signal. Internally, this input is debounced and timed such that a $\overline{RST}$ (or RST) signal of at least 130 ms minimum will be generated. The 130 ms delay commences as the pushbutton reset input is released from the low level. The pushbutton can be initiated by connecting the $\overline{WDS}$ or $\overline{NMI}$ outputs to the $\overline{PBRST}$ input as shown in Figure 3.

Non-Maskable Interrupt

The DS1705/DS1706 generates a non-maskable interrupt ($\overline{NMI}$) for early warning of a power failure. A precision comparator monitors the voltage level at the IN pin relative to an on-chip reference generated by an internal band gap. The IN pin is a high impedance input allowing for a user-defined sense point. An external resistor voltage divider network (Figure 5) is used to interface with high voltage signals. This sense point may be derived from a regulated supply or from a higher DC voltage level closer to the main system power input. Since the IN trip point V_{TP} is 1.25 volts, the proper values for R1 and R2 can be determined by the equation as shown in Figure 5. Proper operation of the DS1705/DS1706 requires that the voltage at the IN pin be limited to V_{CC}. Therefore, the maximum allowable voltage at the supply being monitored (V_{MAX}) can also be derived as shown in Figure 5. A simple approach to solving the equation is to select a value for R2 high enough to keep power consumption low, and solve for R1. The flexibility of the IN input pin allows for detection of power loss at the earliest point in a power supply system, maximizing the amount of time for system shutdown between $\overline{NMI}$ and $\overline{RST}$ (or RST).

When the supply being monitored decays to the voltage sense point, the DS1705/DS1706 pulses the $\overline{NMI}$ output to the active state for a minimum 200 µs. The $\overline{NMI}$ power-fail detection circuitry also has built-in hysteresis of 100 µV. The supply must be below the voltage sense point for approximately 5 µs before a low $\overline{NMI}$ will be generated. In this way, power supply noise is removed from the monitoring function, preventing false interrupts. During a power-up, any detected IN pin levels below V_{TP} by the comparator are disabled from generating an interrupt until V_{CC} rises to V_{CCTP}. As a result, any potential $\overline{NMI}$ pulse will not be initiated until V_{CC} reaches V_{CCTP}.

Connecting $\overline{NMI}$ to $\overline{PBRST}$ would allow non-maskable interrupt to generate an automatic reset when an out-of-tolerance condition occurred in a monitored supply. An example is shown in Figure 3.

Watchdog Timer

The watchdog timer function forces $\overline{WDS}$ signals active when the $\overline{ST}$ input is not clocked within the 1 second time-out period. Time-out of the watchdog starts when $\overline{RST}$ (or RST) becomes inactive. If a high-to-low transition occurs on the $\overline{ST}$ input pin prior to time-out, the watchdog timer is reset and begins to time out again. If the watchdog timer is allowed to time out, the $\overline{WDS}$ signal is driven active (low) for a minimum of 130 ms. The $\overline{ST}$ input can be derived from many microprocessor outputs. The typical signals used are the microprocessors address signals, data signals, or control signals. When the microprocessor functions normally, these signals would, as a matter of routine, cause the watchdog to be reset prior to time-out. To guarantee that the watchdog timer does not time out, a high-to-low transition must occur at or less than the minimum watchdog time-out of 1 second. A typical circuit example is shown in Figure 6.

MICROMONITOR BLOCK DIAGRAM Figure 1

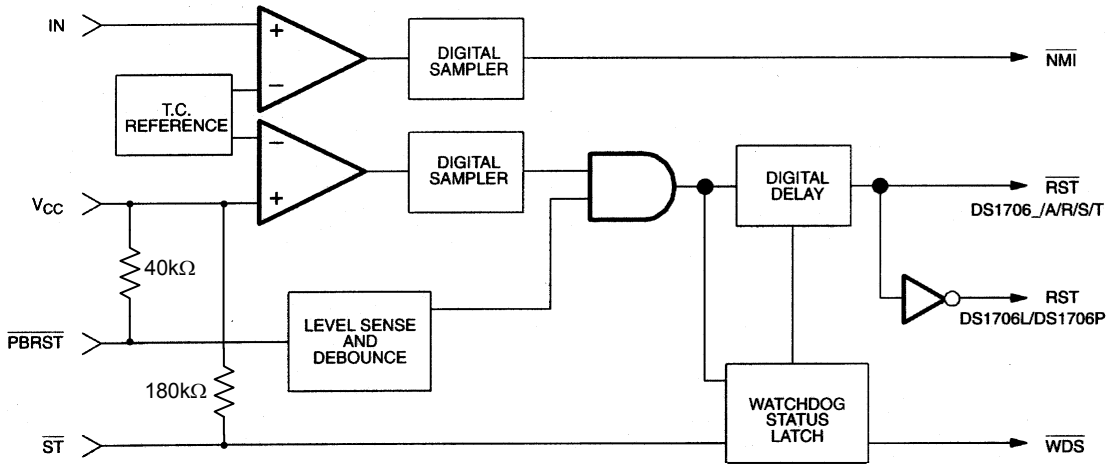

PUSH-BUTTON RESET Figure 2

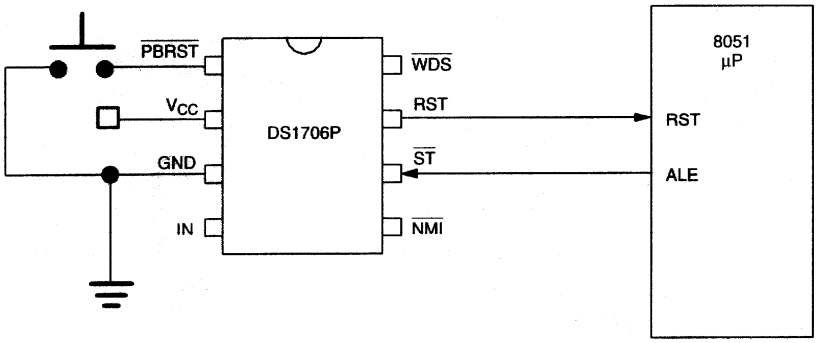

PUSH-BUTTON RESET CONTROLLED BY $\overline{NMI}$ AND $\overline{WDS}$ Figure 3

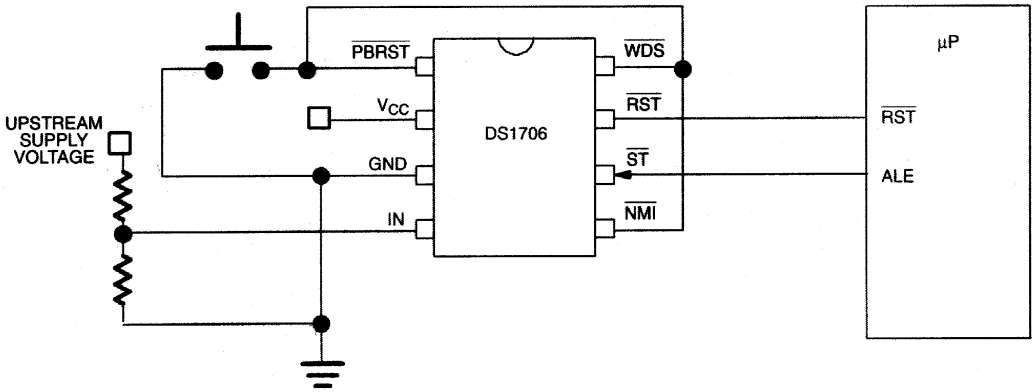

TIMING DIAGRAM: PUSHBUTTON RESET Figure 4

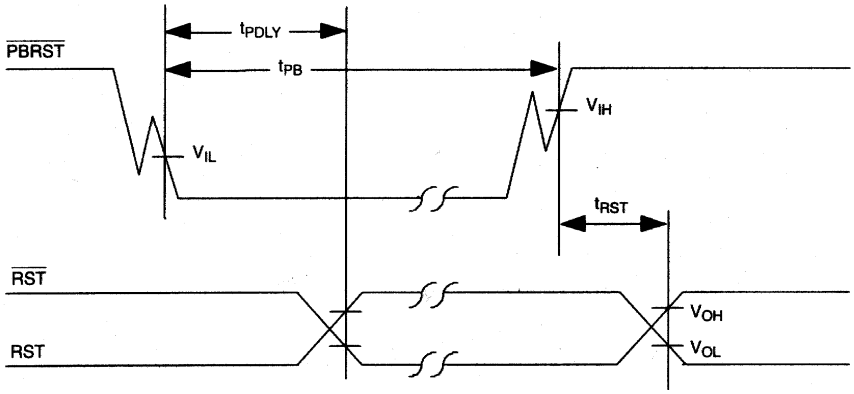

NON-MASKABLE INTERRUPT CIRCUIT EXAMPLE Figure 5

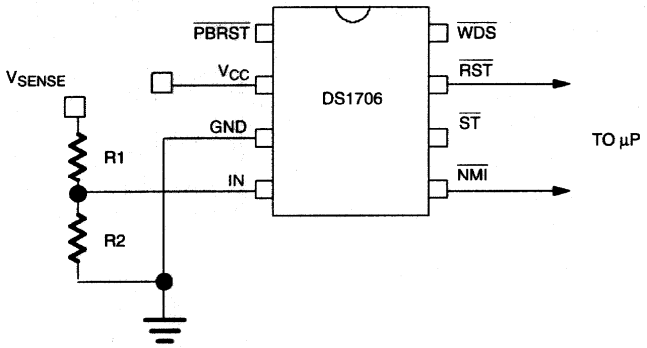

$$V_{SENSE} = \frac{R1 + R2}{R2} \text{ X } 1.25 \qquad V_{MAX} = \frac{V_{SENSE}}{V_{TP}} \text{ X } V_{CC}$$

Example: V_{SENSE} = 4.50V at the trip point
V_{CC} = 3.3V
10 kΩ = R2

Therefore: $\frac{4.50}{1.25}$ X 3.3 = 11.88V maximum

$$4.5 = \frac{R1 + 10k}{10k} \text{ X } 1.25 \qquad R1 = 26 \text{ k}\Omega$$

WATCHDOG TIMER Figure 6

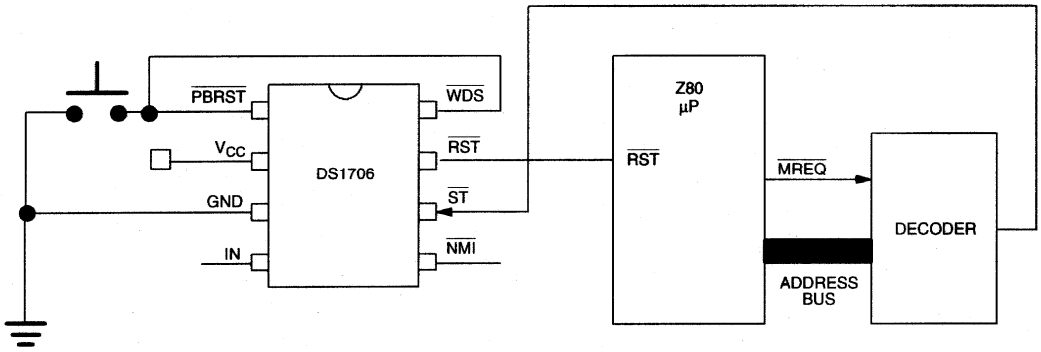

TIMING DIAGRAM: STROBE INPUT Figure 7

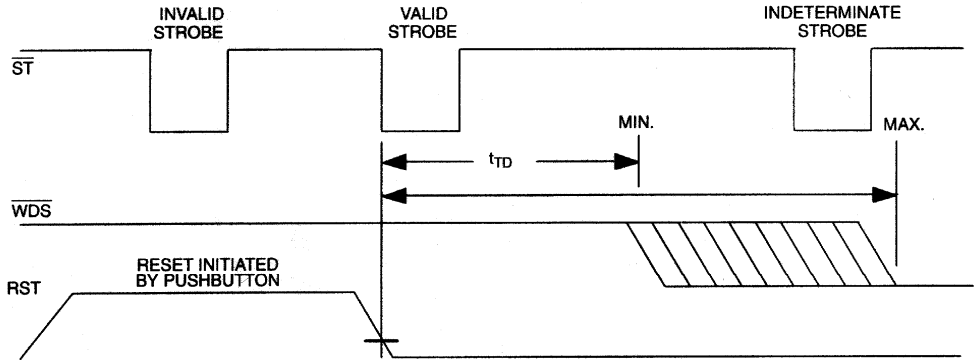

TIMING DIAGRAM: NON-MASKABLE INTERRUPT Figure 8

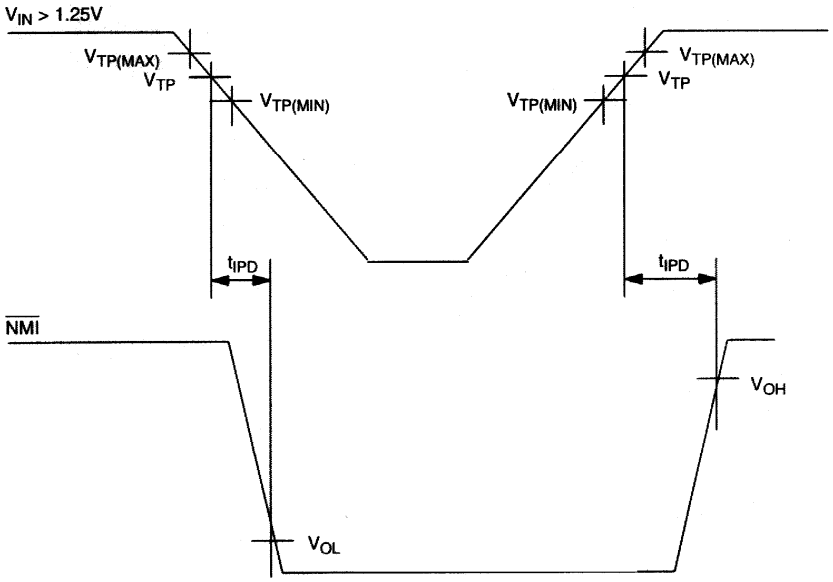

TIMING DIAGRAM: POWER-DOWN Figure 9

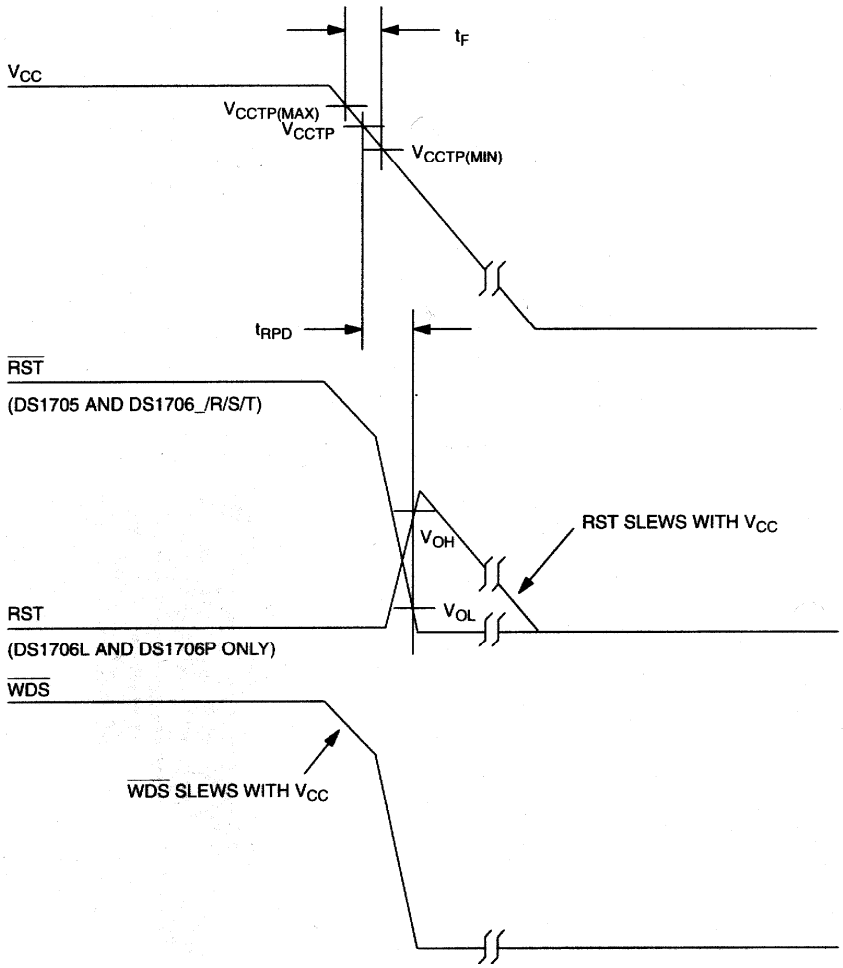

TIMING DIAGRAM: POWER-UP Figure 10

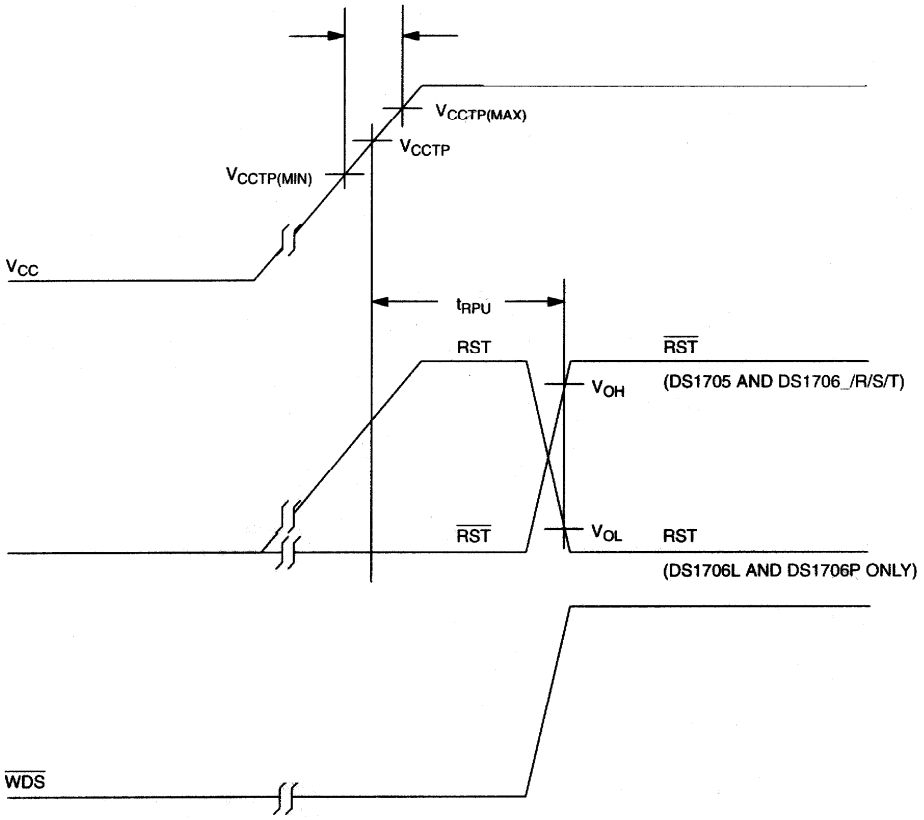

ABSOLUTE MAXIMUM RATINGS

Voltage Range on V_{CC} Pin Relative to Ground	-0.5V to +7.0V
Voltage Range on I/O Relative to Ground*	-0.5V to (V_{CC} + 0.5V)
Operating Temperature Range	-40°C to +85°C
Storage Temperature Range	-55°C to +125°C
Lead Temperature (soldering, 10s)	+260°C
Soldering Temperature (reflow)	
Lead(Pb)-free	+260°C
Containing lead(Pb)	+240°C

This is a stress rating only and functional operation of the device at these or any other conditions above those indicated in the operation sections of this specification is not implied. Exposure to absolute maximum rating conditions for extended periods of time may affect reliability.

**The voltage input on IN, ST, and $\overline{PBRST}$ can be exceeded if the input current is less than 10 mA.*

RECOMMENDED DC OPERATING CONDITIONS (T_A = -40°C to +85°C)

PARAMETER	SYMBOL	MIN	TYP	MAX	UNITS	NOTES
Supply Voltage	V_{CC}	1.2		5.5	V	1
$\overline{ST}$ and $\overline{PBRST}$ Input High Level	V_{IH}	2.0 V_{CC}-0.5		V_{CC}+0.3	V	1, 3 1, 4
$\overline{ST}$ and $\overline{PBRST}$ Input Low Level	V_{IL}	-0.03		+0.5	V	1

DC ELECTRICAL CHARACTERISTICS (V_{CC} = 1.2V to 5.5V, T_A = -40°C to +85°C.)

PARAMETER	SYMBOL	MIN	TYP	MAX	UNITS	NOTES
V_{CC} Trip Point DS1705/DS1706L	V_{CCTP}	4.50	4.65	4.75	V	1
V_{CC} Trip Point DS1706	V_{CCTP}	4.25	4.40	4.50	V	1
V_{CC} Trip Point DS1706T	V_{CCTP}	3.00	3.08	3.15	V	1
V_{CC} Trip Point DS1706S	V_{CCTP}	2.85	2.93	3.00	V	1
V_{CC} Trip Point DS1706P or R	V_{CCTP}	2.55	2.63	2.70	V	1
Input Leakage	I_{IL}	-1.0		+1.0	µA	2
Output Current @ 2.4V	I_{OH}		350		µA	3
Output Current @ 0.4V	I_{OL}	10			mA	3
Output Voltage @ -500 µA	V_{OH}	V_{CC}-0.3	V_{CC}-0.1		V	3
Operating Current @ V_{CC} < 5.5V	I_{CC}			60	µA	5
Operating Current @ V_{CC} < 3.6V	I_{CC}			50	µA	5
IN Input Trip Point	V_{TP}	1.20	1.25	1.30	V	1

CAPACITANCE (T_A = +25°C)

PARAMETER	SYMBOL	MIN	TYP	MAX	UNITS	NOTES
Input Capacitance	C_{IN}			5	pF	
Output Capacitance	C_{OUT}			7	pF	

AC ELECTRICAL CHARACTERISTICS (V_{CC} = 1.2V to 5.5V, T_A = -40°C to +85°C.)

PARAMETER	SYMBOL	MIN	TYP	MAX	UNITS	NOTES
$\overline{PBRST}$ = V_{IL}	t_{PB}	150			ns	
Reset Active Time	t_{RST}	130	205	285	ms	
$\overline{ST}$ Pulse Width	t_{ST}	10			ns	6
V_{CC} Detect to RST and $\overline{RST}$	t_{RPD}		5	8	µs	9
V_{CC} Slew Rate	t_F	20			µs	
V_{CC} Detect to RST and $\overline{RST}$	t_{RPU}	130	205	285	ms	7
V_{CC} Slew Rate	t_R	0			ns	
$\overline{PBRST}$ Stable Low to RST and $\overline{RST}$	t_{PDLY}			250	ns	
Watchdog Timeout	t_{TD}	1.0	1.6	2.2	s	8
VIN Detect to $\overline{NMI}$	t_{IPD}		5	8	µs	9

NOTES:

1. All voltages are referenced to ground.
2. $\overline{PBRST}$ is internally pulled up to V_{CC} with an internal impedance of 40 kΩ typical and the $\overline{ST}$ input is internally pulled up to V_{CC} with an internal impedance of 180 kΩ typical.
3. $V_{CC} \geq 2.4V$.
4. $V_{CC} < 2.4V$.
5. Measured with outputs open and all inputs at V_{CC} or ground.
6. Must not exceed t_{TD} minimum.
7. t_R = 5 µs.
8. Minimum watchdog time-out tested at 2.7V for the 3.3V devices and 4.5V for the 5.0V devices.
9. Noise immunity – pulses < 2 µs will not cause a reset.

PART MARKING CODES

8-pin DIP
(300 MIL)

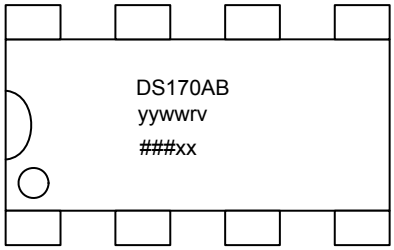

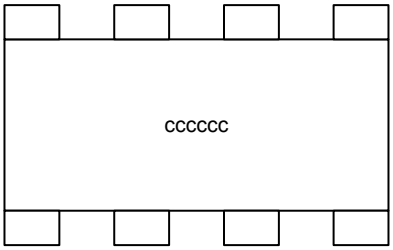

8-pin SOIC
(150 MIL)

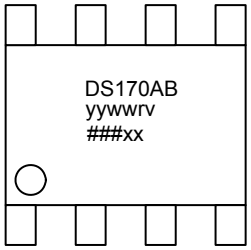

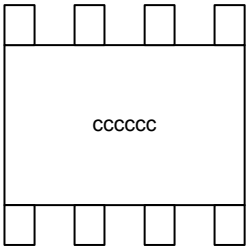

8-pin µSOP
(118 MIL)

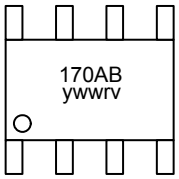

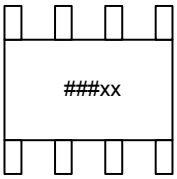

BRAND CODES		
CODE	**DESCRIPTION**	**VALUES**
AB	Device type and tolerance	5_, 6_, 6L, 6P, 6R, 6S, 6T (where'_' is a blank)
yww or yyww	Date Code. Identifies the year and work week the device was assembled.	y, the last digit of the year. yy, the last two digits of the year. ww, the work week (values 01 through 52).
rv	Die Revision	A letter followed by a number (eg. B1)
###xx	Lot Code	Three numbers followed by 2 letters
cccccc	Country of Assembly	Abbreviation of country name.

ORDERING INFORMATION

PART	TEMP RANGE	PIN-PACKAGE	VERSION
DS1705EPA	-40°C to +85°C	8-pin PDIP (300 mils)	5V-5% MONITOR, /RST, /WDS
DS1705ESA	-40°C to +85°C	8-pin SO (150 mils)	5V-5% MONITOR, /RST, /WDS
DS1705EUA	-40°C to +85°C	8-pin µSOP (118 mils)	5V-5% MONITOR, /RST, /WDS
DS1706EPA	-40°C to +85°C	8-pin PDIP (300 mils)	5V-10% MONITOR, /RST, /WDS
DS1706ESA	-40°C to +85°C	8-pin SO (150 mils)	5V-10% MONITOR, /RST, /WDS
DS1706EUA	-40°C to +85°C	8-pin µSOP (118 mils)	5V-10% MONITOR, /RST, /WDS
DS1706LEPA	-40°C to +85°C	8-pin PDIP (300 mils)	5V-5% MONITOR, RST, /WDS
DS1706LESA	-40°C to +85°C	8-pin SO (150 mils)	5V-5% MONITOR, RST, /WDS
DS1706LEUA	-40°C to +85°C	8-pin µSOP (118 mils)	5V-5% MONITOR, RST, /WDS
DS1706PEPA	-40°C to +85°C	8-pin PDIP (300 mils)	3.3V-20% MONITOR, RST, /WDS
DS1706PESA	-40°C to +85°C	8-pin SO (150 mils)	3.3V-20% MONITOR, RST, /WDS
DS1706PEUA	-40°C to +85°C	8-pin µSOP (118 mils)	3.3V-20% MONITOR, RST, /WDS
DS1706REPA	-40°C to +85°C	8-pin PDIP (300 mils)	3.3V-20% MONITOR, /RST, /WDS
DS1706RESA	-40°C to +85°C	8-pin SO (150 mils)	3.3V-20% MONITOR, /RST, /WDS
DS1706REUA	-40°C to +85°C	8-pin µSOP (118 mils)	3.3V-20% MONITOR, /RST, /WDS
DS1706SEPA	-40°C to +85°C	8-pin PDIP (300 mils)	3.3V-10% MONITOR, /RST, /WDS
DS1706SESA	-40°C to +85°C	8-pin SO (150 mils)	3.3V-10% MONITOR, /RST, /WDS
DS1706SEUA	-40°C to +85°C	8-pin µSOP (118 mils)	3.3V-10% MONITOR, /RST, /WDS
DS1706TEPA	-40°C to +85°C	8-pin PDIP (300 mils)	3.3V-5% MONITOR, /RST, /WDS
DS1706TESA	-40°C to +85°C	8-pin SO (150 mils)	3.3V-5% MONITOR, /RST, /WDS
DS1706TEUA	-40°C to +85°C	8-pin µSOP (118 mils)	3.3V-5% MONITOR, /RST, /WDS

Note: *Devices are also available in a lead(Pb)-free/RoHS-compliant package. Specify lead-free by adding a plus (+) to the part number when ordering.*

E = -40°C to +85°C temperature range
A = 8-lead device
P = Plastic DIP (300 mils)
S = SO (150 mils)
U = µSOP (118 mils)

PACKAGE INFORMATION

For the latest package outline information and land patterns, go to **www.maxim-ic.com/packages.** Note that a "+", "#", or "-" in the package code indicates RoHS status only. Package drawings may show a different suffix character, but the drawing pertains to the package regardless of RoHS status.

PACKAGE TYPE	PACKAGE CODE	DOCUMENT NO.
8 PDIP	P8-2	**21-0043**
8 SO	S8-2	**21-0041**
8 µSOP	U8-1	**21-0036**

REVISION HISTORY

REVISION DATE	DESCRIPTION	PAGES CHANGED
4/10	Added the lead temperature and updated the soldering temperature in the *Absolute Maximum Ratings*; corrected Note 9.	8, 9

Maxim cannot assume responsibility for use of any circuitry other than circuitry entirely embodied in a Maxim product. No circuit patent licenses are implied. Maxim reserves the right to change the circuitry and specifications without notice at any time.

Maxim Integrated Products, 120 San Gabriel Drive, Sunnyvale, CA 94086 408-737-7600

© 2010 Maxim Integrated Products
Maxim is a registered trademark of Maxim Integrated Products, Inc. The Dallas logo is a registered trademark of Maxim Integrated Products, Inc.

Компания «ЭлектроПласт» предлагает заключение долгосрочных отношений при поставках импортных электронных компонентов на взаимовыгодных условиях!

Наши преимущества:

- Оперативные поставки широкого спектра электронных компонентов отечественного и импортного производства напрямую от производителей и с крупнейших мировых складов;
- Поставка более 17-ти миллионов наименований электронных компонентов;
- Поставка сложных, дефицитных, либо снятых с производства позиций;
- Оперативные сроки поставки под заказ (от 5 рабочих дней);
- Экспресс доставка в любую точку России;
- Техническая поддержка проекта, помощь в подборе аналогов, поставка прототипов;
- Система менеджмента качества сертифицирована по Международному стандарту ISO 9001;
- Лицензия ФСБ на осуществление работ с использованием сведений, составляющих государственную тайну;
- Поставка специализированных компонентов (Xilinx, Altera, Analog Devices, Intersil, Interpoint, Microsemi, Aeroflex, Peregrine, Syfer, Eurofarad, Texas Instrument, Miteq, Cobham, E2V, MA-COM, Hittite, Mini-Circuits,General Dynamics и др.);

Помимо этого, одним из направлений компании «ЭлектроПласт» является направление «Источники питания». Мы предлагаем Вам помощь Конструкторского отдела:

- Подбор оптимального решения, техническое обоснование при выборе компонента;
- Подбор аналогов;
- Консультации по применению компонента;
- Поставка образцов и прототипов;
- Техническая поддержка проекта;
- Защита от снятия компонента с производства.

Как с нами связаться

Телефон: 8 (812) 309 58 32 (многоканальный)
Факс: 8 (812) 320-02-42
Электронная почта: org@eplast1.ru
Адрес: 198099, г. Санкт-Петербург, ул. Калинина, дом 2, корпус 4, литера А.