Features

- Industry-standard Architecture
  - Emulates Many 20-pin PALs
  - Low-cost Easy-to-use Software Tools
- High-speed Electrically-erasable Programmable Logic Devices
  - 12 ns Maximum Pin-to-pin Delay
- Low-power - 5 µA (Typ) Standby Current
- CMOS and TTL Compatible Inputs and Outputs
  - Input and I/O Pin Keeper Circuits
- Advanced Flash Technology
  - Reprogrammable
  - 100% Tested
- High-reliability CMOS Process
  - 20 Year Data Retention
  - 100 Erase/Write Cycles
  - 2,000V ESD Protection
  - 200 mA Latchup Immunity
- Commercial and Industrial Temperature Ranges
- Dual-in-line and Surface Mount Packages in Standard Pinouts
- PCI-compliant
- Green (Pb/Halide-free/RoHS Compliant) Package Options Available

High-performance EE PLD

ATF16V8CZ

1. Description

The ATF16V8CZ is a high-performance EECMOS programmable logic device that utilizes Atmel's proven electrically-erasable Flash memory technology. Speeds down to 12 ns and a 5 µA (Typ) edge-sensing power-down mode are offered. All speed ranges are specified over the full 5V ±10% range for industrial temperature ranges; 5V ±5% for commercial range 5-volt devices.

The ATF16V8CZ incorporates a superset of the generic architectures, which allows direct replacement of the 16R8 family and most 20-pin combinatorial PLDs. Eight outputs are each allocated eight product terms. Three different modes of operation, configured automatically with software, allow highly complex logic functions to be realized.

The ATF16V8CZ can significantly reduce total system power, thereby enhancing system reliability and reducing power supply costs. When all the inputs and internal nodes are not switching, supply current drops to less than 5 µA typically. This automatic power-down feature (or sleep mode) allows for power savings in slow clock systems and asynchronous applications. Also, the pin-keeper circuits eliminate the need for internal pull-up resistors along with their attendant power consumption.

0453H–PLD–7/05

Figure 1-1. Block Diagram

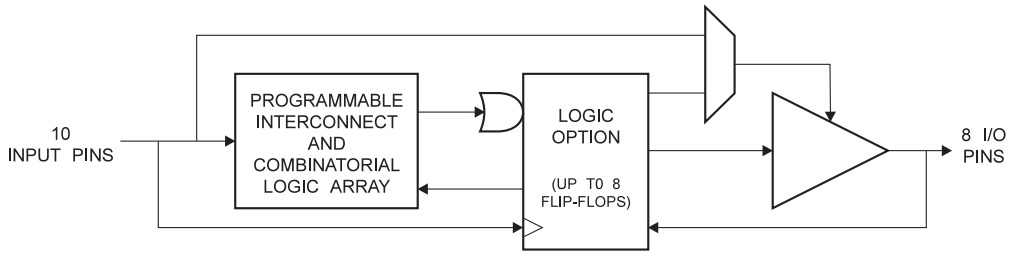

2. Pin Configuration and Pinouts

Table 2-1. Pinouts - All Pinouts Top View

Pin Name	Function
CLK	Clock
I	Logic Inputs
I/O	Bi-directional Buffers
$\overline{OE}$	Output Enable
VCC	+5V Supply

Figure 2-1. TSSOP

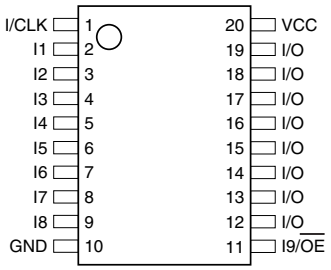

Figure 2-2. DIP/SOIC

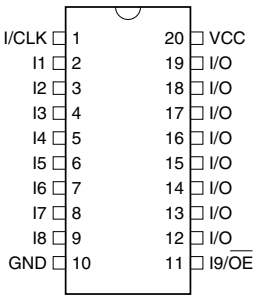

Figure 2-3. PLCC

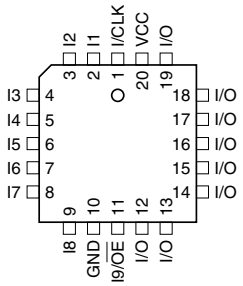

3. Absolute Maximum Ratings*

Temperature Under Bias..... -40°C to +85°C

Storage Temperature..... -65°C to +150°C

Voltage on Any Pin with
Respect to Ground .....-2.0V to +7.0V(1)

Voltage on Input Pins
with Respect to Ground
During Programming.....-2.0V to +14.0V(1)

Programming Voltage with
Respect to Ground .....-2.0V to +14.0V(1)

*NOTICE: Stresses beyond those listed under "Absolute Maximum Ratings" may cause permanent damage to the device. This is a stress rating only and functional operation of the device at these or any other conditions beyond those indicated in the operational sections of this specification is not implied. Exposure to absolute maximum rating conditions for extended periods may affect device reliability.

Note: 1. Minimum voltage is -0.6V DC, which may undershoot to -2.0V for pulses of less than 20 ns. Maximum output pin voltage is V_{CC} + 0.75V DC, which may overshoot to 7.0V for pulses of less than 20 ns.

4. DC and AC Operating Conditions

	Commercial	Industrial
Operating Temperature (Ambient)	0°C - 70°C	-40°C - 85°C
V_{CC} Power Supply	5V ±5%	5V ±10%

4.1 DC Characteristics

Symbol	Parameter	Condition		Min	Typ	Max	Units
I_{IL}	Input or I/O Low Leakage Current	$0 \le V_{IN} \le V_{IL}$(Max)				-10	µA
I_{IH}	Input or I/O High Leakage Current	$3.5 \le V_{IN} \le V_{CC}$				10	µA
I_{CC1}	Power Supply Current	15 MHz, V_{CC} = Max, V_{IN} = 0, V_{CC}, Outputs Open	Com			95	mA
			Ind.			105	mA
I_{CC}(1)	Power Supply Current, Standby Mode	0 MHz, V_{CC} = Max, V_{IN} = 0, V_{CC}, Outputs Open	Com.		5		µA
			Ind		5		µA
I_{OS}	Output Short Circuit Current	V_{OUT} = 0.5V; V_{CC}= 5V; TA = 25°C				-150	mA
V_{IL}	Input Low Voltage	Min < V_{CC} < Max		-0.5		0.8	V
V_{IH}	Input High Voltage			2.0		V_{CC}+1	V
V_{OL}	Output Low Voltage	V_{CC} = Min, All Outputs I_{OL} = -16 mA	Com, Ind.			0.5	V

4.1 DC Characteristics

Symbol	Parameter	Condition		Min	Typ	Max	Units
V_{OH}	Output High Voltage	V_{CC} = Min I_{OL} = -3.2 mA		2.4			V
I_{OL}	Output Low Current	V_{CC} = Min	Com.	24			mA
			Ind.	12			
I_{OH}	Output High Current	V_{CC} = Min	Com., Ind.	4			mA

Note: 1. All I_{CC} parameters measured with outputs open. Data is based on Atmel test patterns. Reading may vary with pattern.

4.2 AC Waveforms[1]

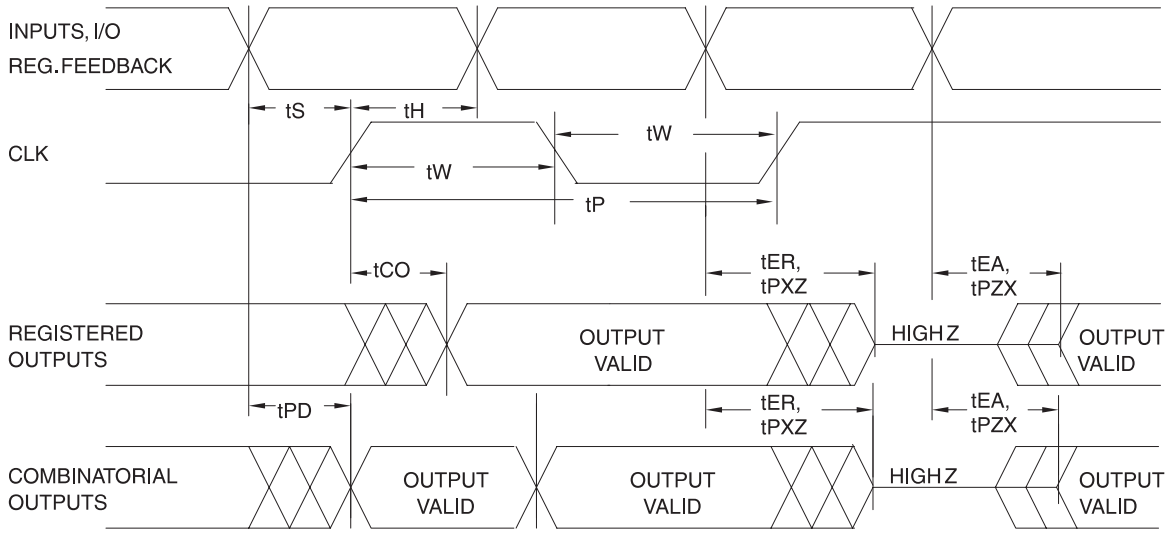

Note: 1. Timing measurement reference is 1.5V. Input AC driving levels are 0.0V and 3.0V, unless otherwise specified.

4.3 AC Characteristics

Symbol	Parameter	-12		-15		Units
		Min	Max	Min	Max	
t_{PD}	Input or Feedback to Non-registered Output	3	12	3	15	ns
t_{CF}	Clock to Feedback		6		8	ns
t_{CO}	Clock to Output	2	8	2	10	ns
t_S	Input or Feedback Setup Time	10		12		ns
t_H	Input Hold Time	0		0		ns
t_P	Clock Period	12		16		ns
t_W	Clock Width	6		8		ns
f_{MAX}	External Feedback $1/(t_S + t_{CO})$		55		45	MHz
	Internal Feedback $1/(t_S + t_{CF})$		62		50	MHz
	No Feedback $1/(t_P)$		83		62	MHz
t_{EA}	Input to Output Enable – Product Term	3	12	3	15	ns
t_{ER}	Input to Output Disable – Product Term	2	15	2	15	ns
t_{PZX}	$\overline{OE}$ pin to Output Enable	2	12	2	15	ns
t_{PXZ}	$\overline{OE}$ pin to Output Disable	1.5	12	1.5	15	ns

4.4 Input Test Waveforms

4.4.1 Input Test Waveforms and Measurement Levels

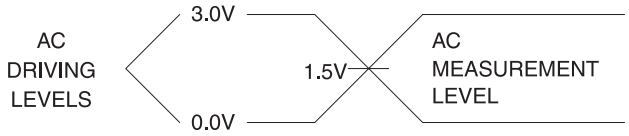

t_R, t_F < 1.5 ns (10% to 90%)

4.4.2 Output Test Loads

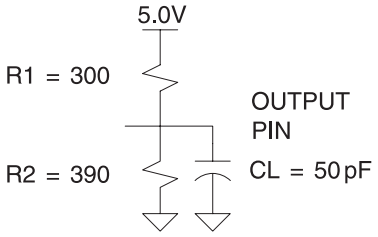

Note: Similar devices are tested with slightly different loads. These load differences may affect output signals' delay and slew rate. Atmel devices are tested with sufficient margins to meet compatible devices.

4.4.3 Pin Capacitance

Table 4-1. Pin Capacitance (f = 1 MHz, T = 25°C[1])

	Typ	Max	Units	Conditions
C_{IN}	5	8	pF	V_{IN} = 0V
C_{OUT}	6	8	pF	V_{OUT} = 0V

Note: 1. Typical values for nominal supply voltage. This parameter is only sampled and is not 100% tested.

4.5 Power-up Reset

The ATF16V8CZ's registers are designed to reset during power-up. At a point delayed slightly from V_{CC} crossing V_{RST}, all registers will be reset to the low state. As a result, the registered output state will always be high on power-up.

This feature is critical for state machine initialization. However, due to the asynchronous nature of reset and the uncertainty of how V_{CC} actually rises in the system, the following conditions are required:

1. The V_{CC} rise must be monotonic, from below 0.7V,
2. After reset occurs, all input and feedback setup times must be met before driving the clock term high, and
3. The signals from which the clock is derived must remain stable during t_{PR}.

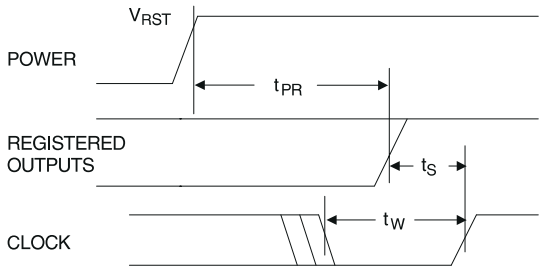

Parameter	Description	Typ	Max	Units
t_{PR}	Power-up Reset Time	600	1,000	ns
V_{RST}	Power-up Reset Voltage	3.8	4.5	V

4.6 Preload of Registered Outputs

The ATF16V8CZ's registers are provided with circuitry to allow loading of each register with either a high or a low. This feature will simplify testing since any state can be forced into the registers to control test sequencing. A JEDEC file with preload is generated when a source file with vectors is compiled. Once downloaded, the JEDEC file preload sequence will be done automatically by approved programmers.

5. Security Fuse Usage

A single fuse is provided to prevent unauthorized copying of the ATF16V8CZ fuse patterns. Once programmed, fuse verify and preload are inhibited. However, the 64-bit User Signature remains accessible.

The security fuse should be programmed last, as its effect is immediate.

6. Input and I/O Pin-keeper Circuits

The ATF16V8CZ contains internal input and I/O pin-keeper circuits. These circuits allow each ATF16V8CZ pin to hold its previous value even when it is not being driven by an external source or by the device's output buffer. This helps insure that all logic array inputs are at known, valid logic levels. This reduces system power by preventing pins from floating to indeterminate levels. By using pin-keeper circuits rather than pull-up resistors, there is no DC current required to hold the pins in either logic state (high or low).

These pin-keeper circuits are implemented as weak feedback inverters, as shown in the Input Diagram below. These keeper circuits can easily be overdriven by standard TTL- or CMOS-compatible drivers. The typical overdrive current required is 40 µA.

Figure 6-1. Input Diagram

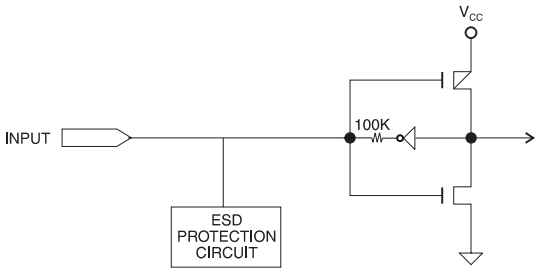

Figure 6-2. I/O Diagram

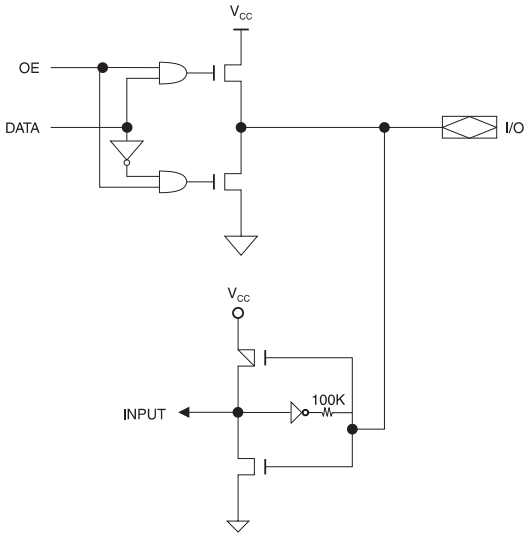

7. Functional Logic Diagram Description

The Logic Option and Functional Diagrams describe the ATF16V8CZ architecture. Eight configurable macrocells can be configured as a registered output, combinatorial I/O, combinatorial output, or dedicated input.

The ATF16V8CZ can be configured in one of three different modes. Each mode makes the ATF16V8CZ look like a different device. Most PLD compilers can choose the right mode automatically. The user can also force the selection by supplying the compiler with a mode selection. The determining factors would be the usage of register versus combinatorial outputs and dedicated outputs versus outputs with output enable control.

The ATF16V8CZ universal architecture can be programmed to emulate many 20-pin PAL devices. These architectural subsets can be found in each of the configuration modes described in the following pages. The user can download the listed subset device JEDEC programming file to the PLD programmer, and the ATF16V8CZ can be configured to act like the chosen device. Check with your programmer manufacturer for this capability.

Unused product terms are automatically disabled by the compiler to decrease power consumption. A security fuse, when programmed, protects the content of the ATF16V8CZ. Eight bytes (64 fuses) of User Signature are accessible to the user for purposes such as storing project name, part number, revision, or date. The User Signature is accessible regardless of the state of the security fuse.

Table 7-1. Compiler Mode Selection

	Registered	Complex	Simple	Auto Select
ABEL, Atmel-ABEL	P16C8R	P16V8C	P16V8AS	P16V8
CUPL	G16V8MS	G16V8MA	G16V8AS	G16V8A
LOG/iC	GAL16V8_R[(1)]	GAL16V8_C7[(1)]	GAL16V8_C8[(1)]	GAL16V8
OrCAD-PLD	“Registered”	“Complex”	“Simple”	GAL16V8A
PLDesigner	P16V8R	P16V8C	P16V8C	P16V8A
Tango-PLD	G16V8R	G16V8C	G16V8AS	G16V8

Notes: 1. Only applicable for version 3.4 or lower.

8. Macrocell Configuration

Software compilers support the three different OMC modes as different device types. These device types are listed in the table below. Most compilers have the ability to automatically select the device type, generally based on the register usage and output enable ($\overline{OE}$) usage. Register usage on the device forces the software to choose the registered mode. All combinatorial outputs with $\overline{OE}$ controlled by the product term will force the software to choose the complex mode. The software will choose the simple mode only when all outputs are dedicated combinatorial without $\overline{OE}$ control. The different device types listed in the table can be used to override the automatic device selection by the software. For further details, refer to the compiler software manuals.

When using compiler software to configure the device, the user must pay special attention to the following restrictions in each mode.

In **registered mode** pin 1 and pin 11 are permanently configured as clock and output enable, respectively. These pins cannot be configured as dedicated inputs in the registered mode.

In **complex mode** pin 1 and pin 11 become dedicated inputs and use the feedback paths of pin 19 and pin 12 respectively. Because of this feedback path usage, pin 19 and pin 12 do not have the feedback option in this mode.

In **simple mode** all feedback paths of the output pins are routed via the adjacent pins. In doing so, the two inner most pins (pins 15 and 16) will not have the feedback option as these pins are always configured as dedicated combinatorial output.

8.1 ATF16V8CZ Registered Mode

PAL Device Emulation/PAL Replacement. The registered mode is used if one or more registers are required. Each macrocell can be configured as either a registered or combinatorial output or I/O, or as an input. For a registered output or I/O, the output is enabled by the $\overline{OE}$ pin, and the register is clocked by the CLK pin. Eight product terms are allocated to the sum term. For a combinatorial output or I/O, the output enable is controlled by a product term, and seven product terms are allocated to the sum term. When the macrocell is configured as an input, the output enable is permanently disabled.

Any register usage will make the compiler select this mode. The following registered devices can be emulated using this mode:

16R8	16RP8
16R6	16RP6
16R4	16RP4

Figure 8-1. Registered Configuration for Registered Mode[1][2]

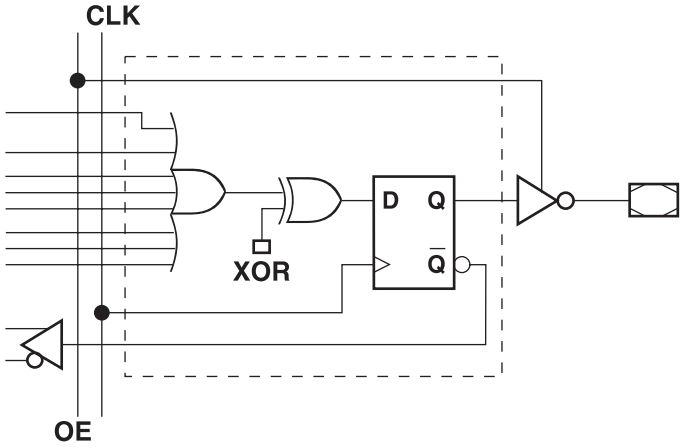

Notes: 1. Pin 1 controls common CLK for the registered outputs.
Pin 11 controls common $\overline{OE}$ for the registered outputs.
Pin 1 and Pin 11 are permanently configured as CLK and $\overline{OE}$.

2. The development software configures all the architecture control bits and checks for proper pin usage automatically.

Figure 8-2. Combinatorial Configuration for Registered Mode[1][2]

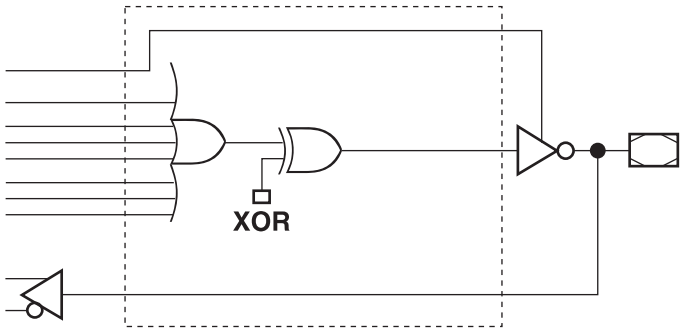

Notes: 1. Pin 1 and Pin 11 are permanently configured as CLK and $\overline{OE}$.

2. The development software configures all the architecture control bits and checks for proper pin usage automatically.

Figure 8-3. Registered Mode Logic Diagram

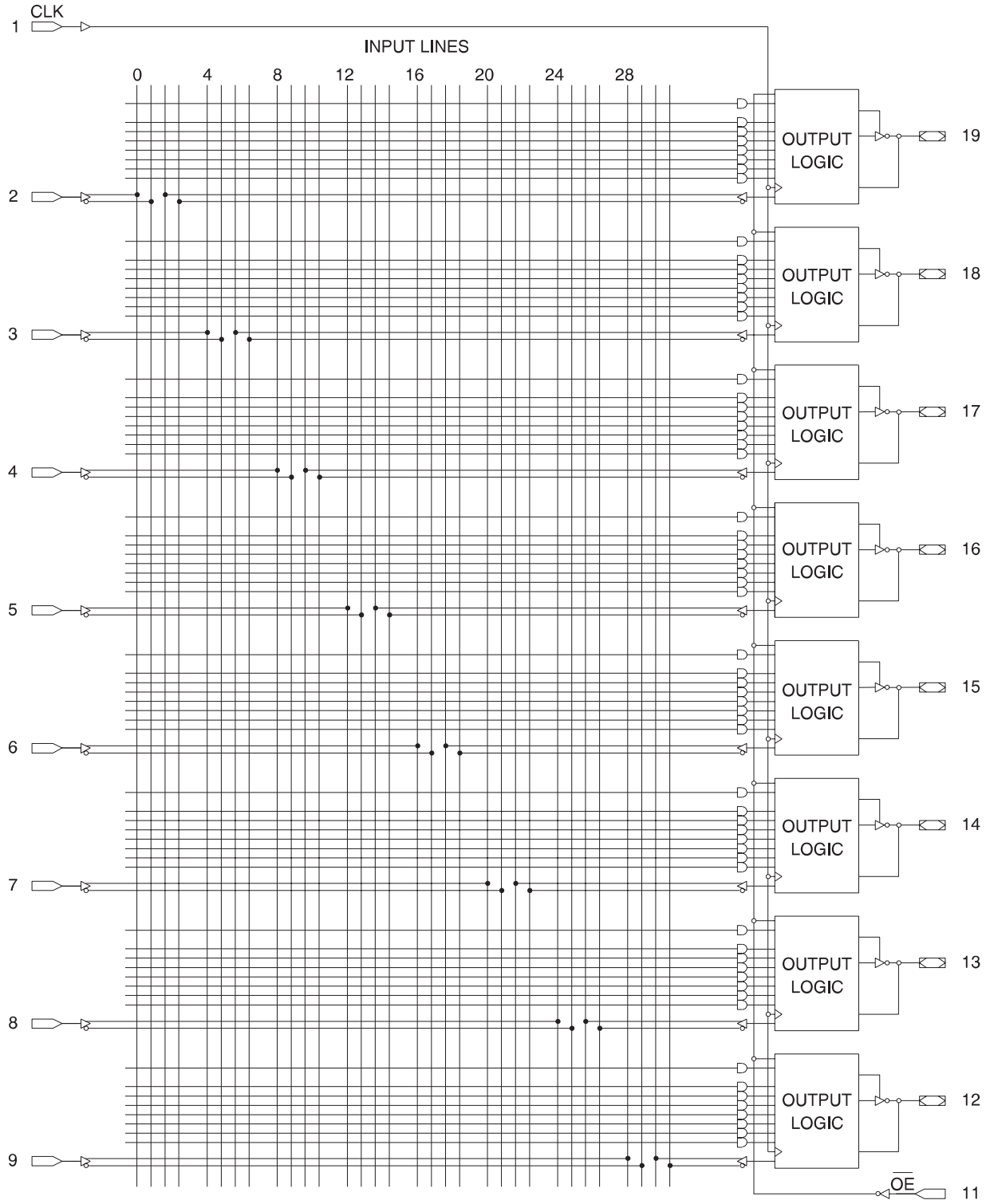

8.2 ATF16V8CZ Complex Mode

PAL Device Emulation/PAL Replacement. In the complex mode, combinatorial output and I/O functions are possible. Pins 1 and 11 are regular inputs to the array. Pins 13 through 18 have pin feedback paths back to the AND-array, which makes full I/O capability possible. Pins 12 and 19 (outermost macrocells) are outputs only. They do not have input capability. In this mode, each macrocell has seven product terms going to the sum term and one product term enabling the output.

Combinatorial applications with an $\overline{OE}$ requirement will make the compiler select this mode. The following devices can be emulated using this mode:

16L8

16H8

16P8

Figure 8-4. Complex Mode Option

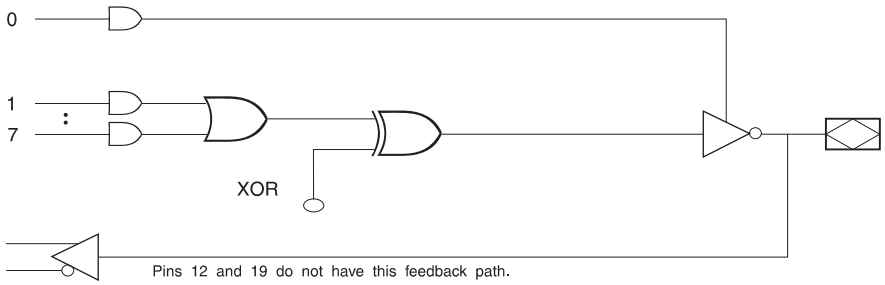

9. ATF16V8CZ Simple Mode

PAL Device Emulation/PAL Replacement. In the Simple Mode, 8 product terms are allocated to the sum term. Pins 15 and 16 (center macrocells) are permanently configured as combinatorial outputs. Other macrocells can be either inputs or combinatorial outputs with pin feedback to the AND-array. Pins 1 and 11 are regular inputs.

The compiler selects this mode when all outputs are combinatorial without $\overline{OE}$ control. The following simple PALs can be emulated using this mode:

10L8 10H8 10P8

12L6 12H6 12P6

14L4 14H4 14P4

16L2 16H2 16P2

Figure 9-1. Simple Mode Option

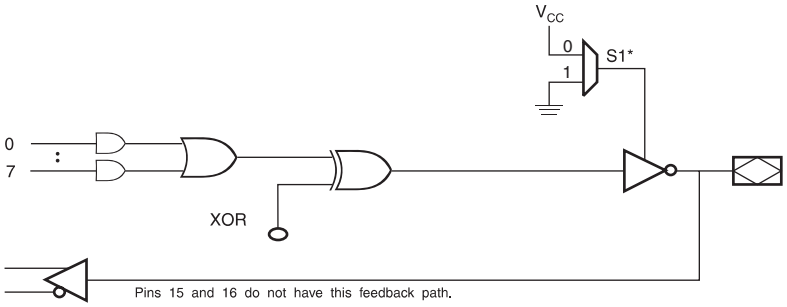

* - Pins 15 and 16 are always enabled.

Figure 9-2. Complex Mode Logic Diagram

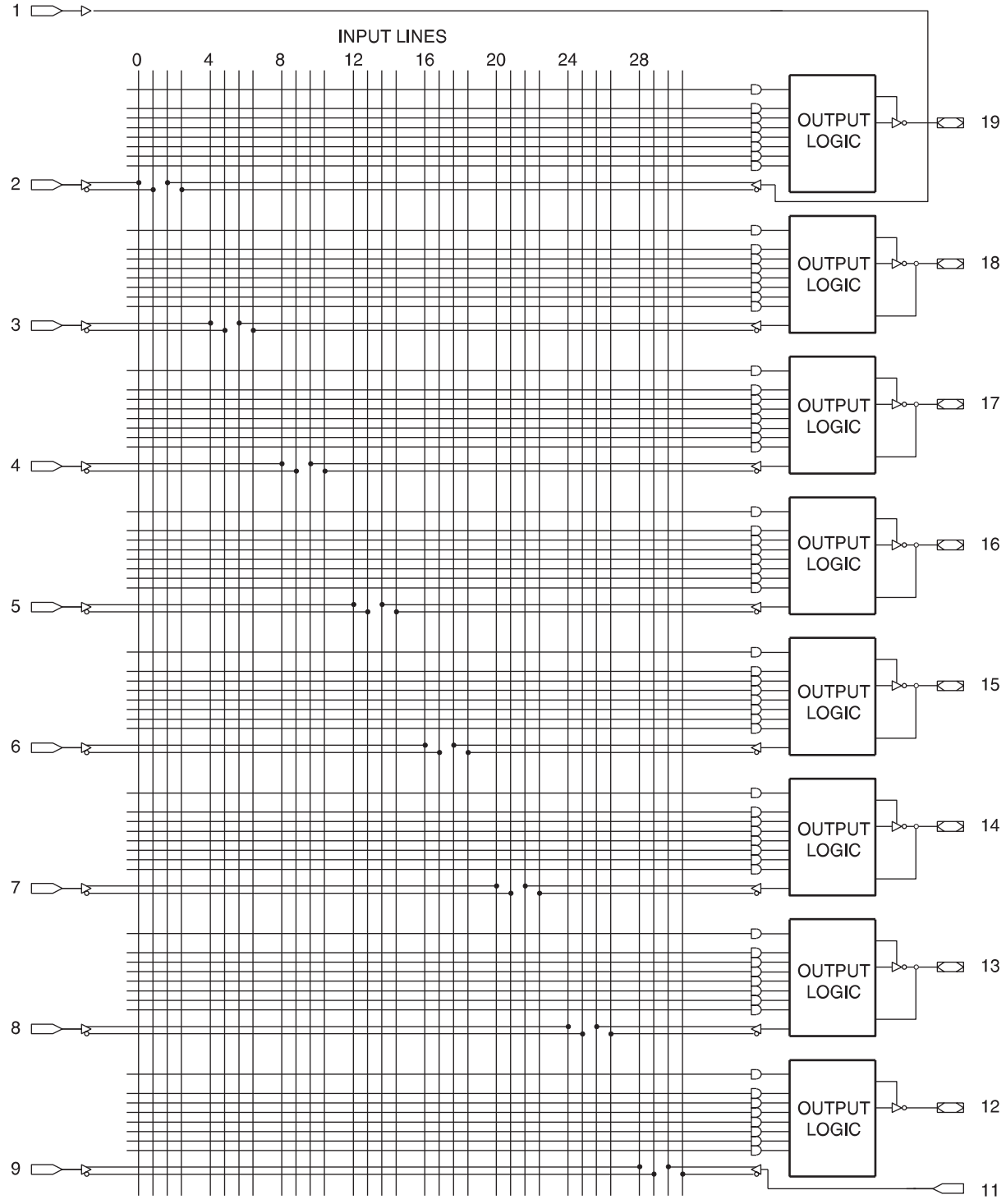

Figure 9-3. Simple Mode Logic Diagram

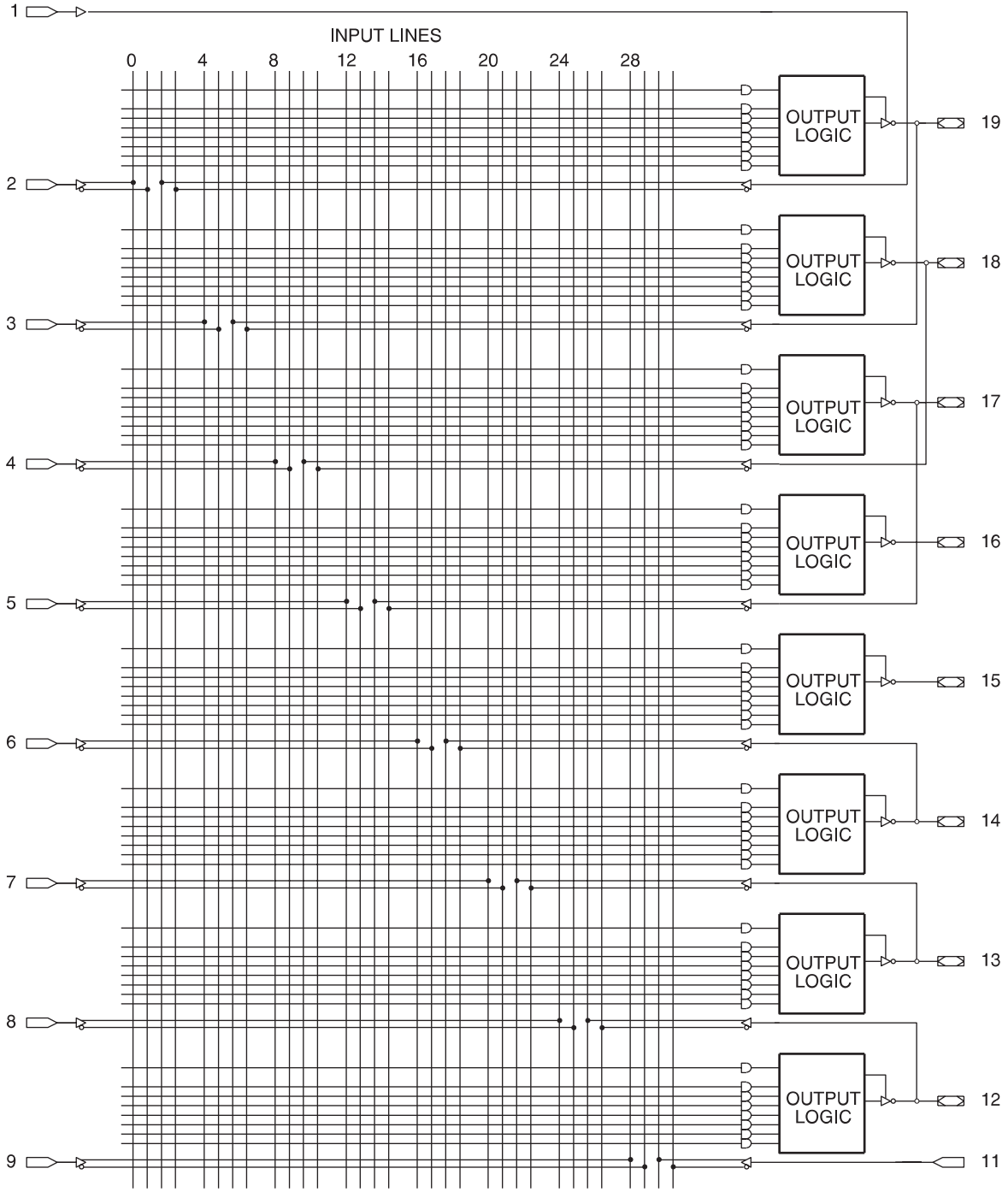

9.1 Test Characterization Data

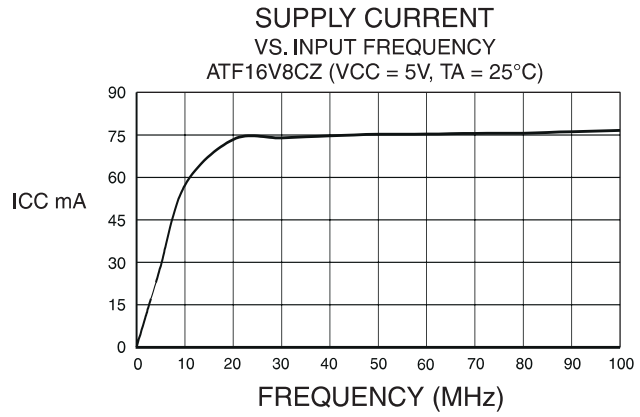

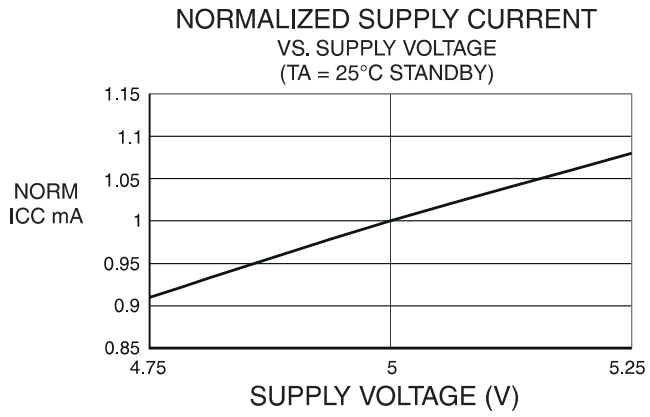

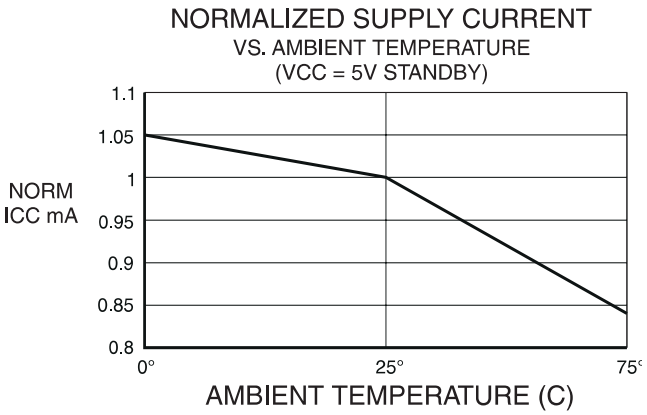

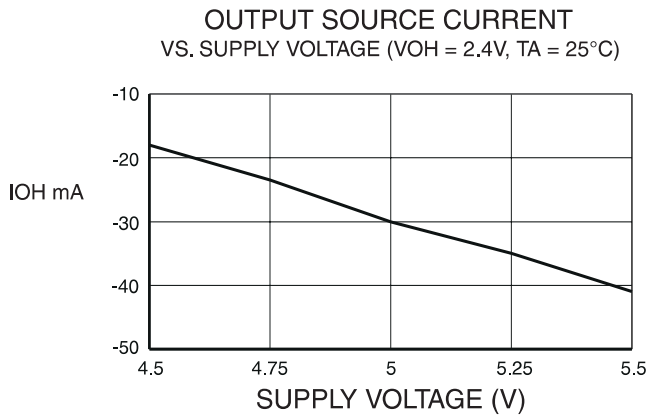

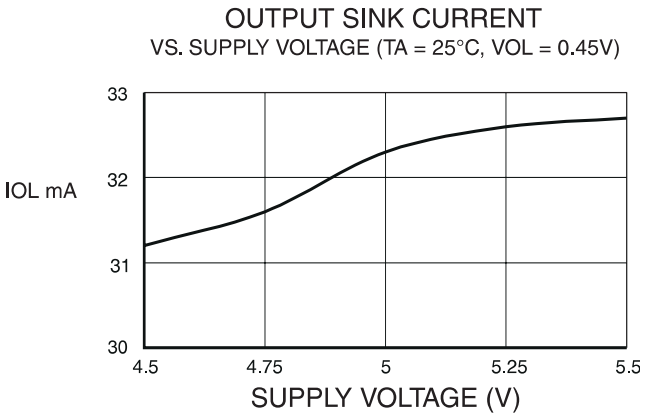

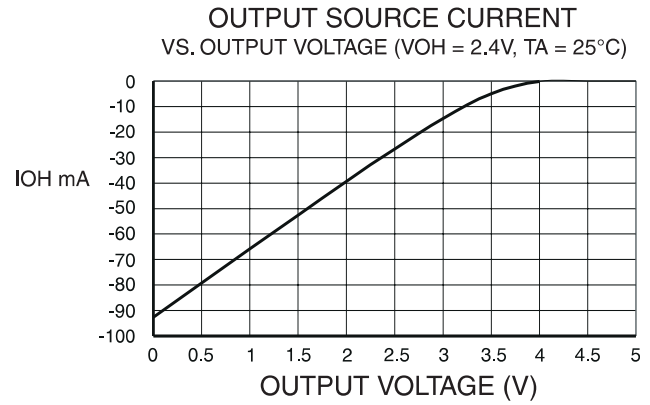

OUTPUT SINK CURRENT
VS. OUTPUT VOLTAGE (VCC = 5V, TA = 25°C)

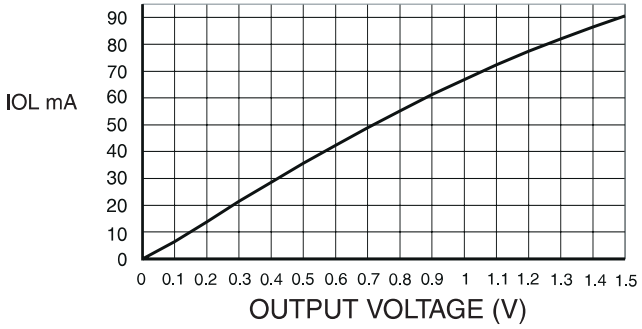

NORMALIZED t_{PD}
VS. SUPPLY VOLTAGE (TA = 25°C)

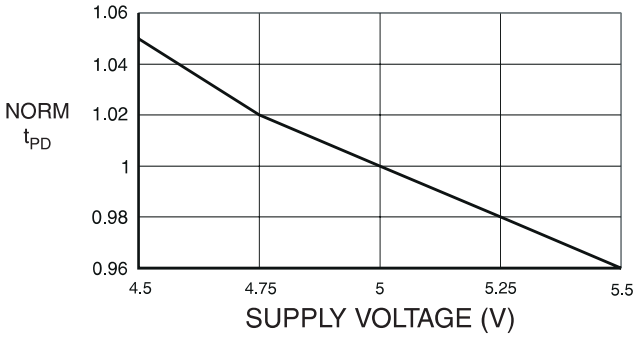

NORMALIZED t_{PD}
VS. AMBIENT TEMPERATURE (TA = 25°C)

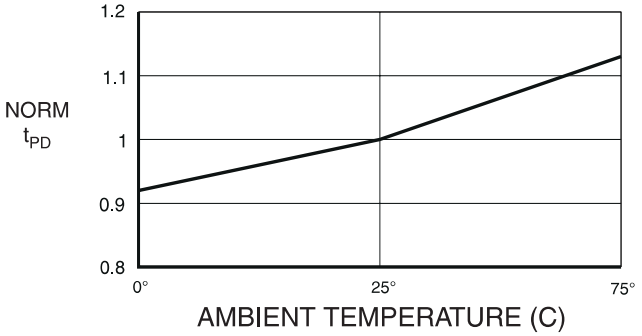

NORMALIZED t_{CO}
VS. SUPPLY VOLTAGE (TA = 25°C)

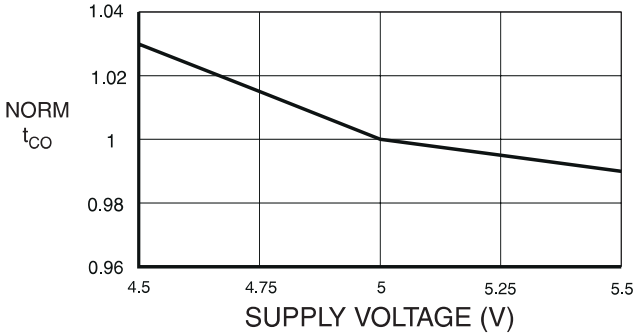

NORMALIZED t_{CO}
VS. AMBIENT TEMPERATURE (VCC = 5V)

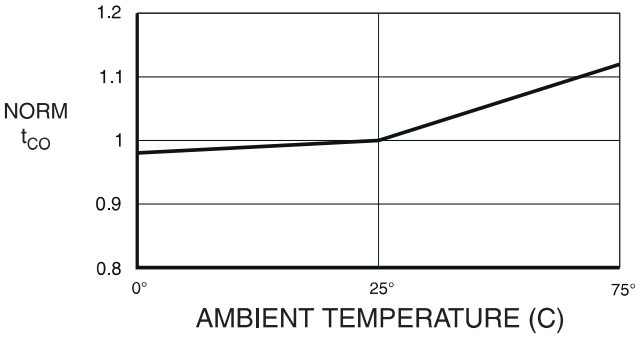

NORMALIZED t_S
VS. SUPPLY VOLTAGE (TA = 25C)

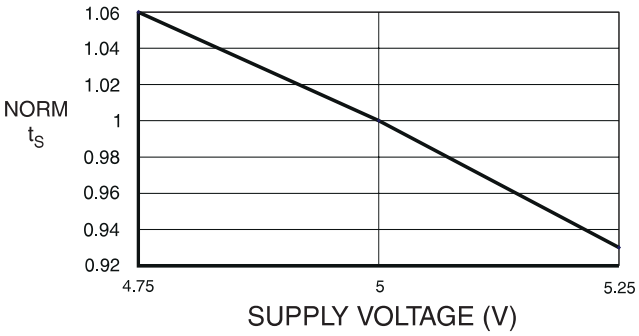

NORMALIZED t_S
VS. AMBIENT TEMPERATURE (TA = 25°C)

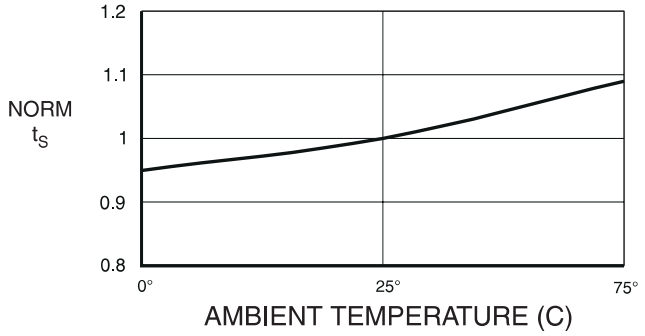

NORMALIZED t_H
VS. SUPPLY VOLTAGE (TA = 25°C)

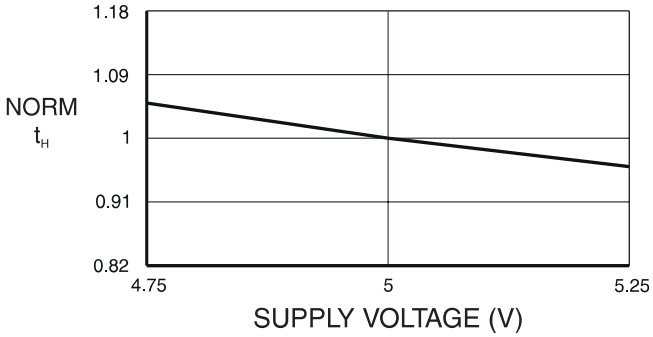

NORMALIZED t_H
VS. AMBIENT TEMPERATURE (VCC = 5V)

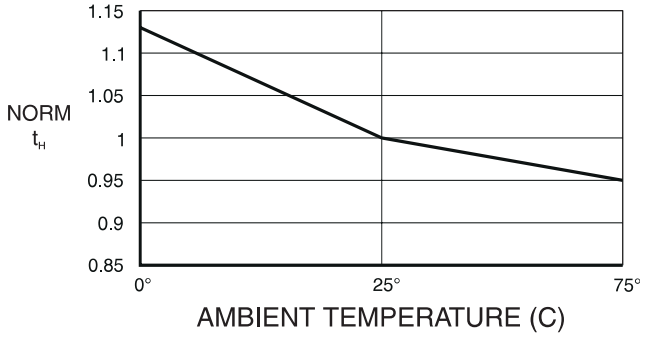

INPUT CLAMP CURRENT
VS. INPUT VOLTAGE (TA = 25°C, VCC = 5V)

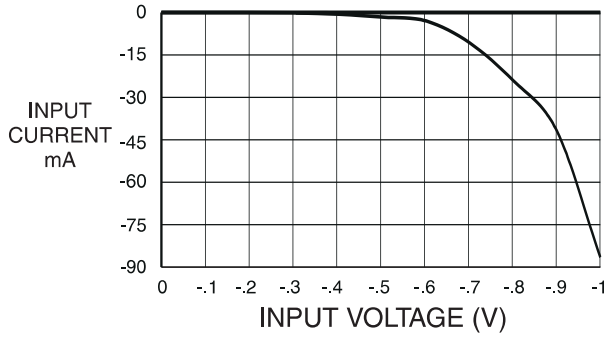

INPUT CURRENT
VS. INPUT VOLTAGE (VCC = 5V, TA = 25°C)

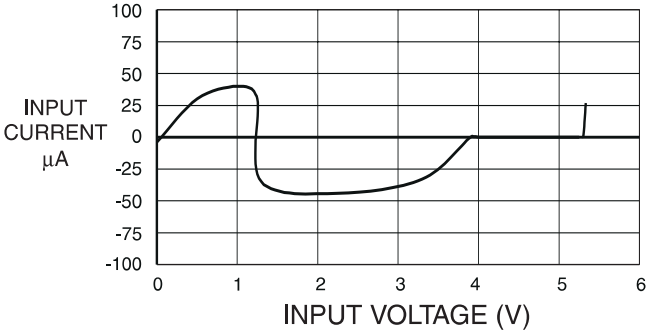

10. Ordering Information

10.1 Standard Package Options

t_{PD} (ns)	t_S (ns)	t_{CO} (ns)	Ordering Code	Package	Operation Range
12	10	8	ATF16V8CZ-12JC ATF16V8CZ-12PC ATF16V8CZ-12SC ATF16V8CZ-12XC	20J 20P3 20S 20X	Commercial (0°C to 70°C)
15	12	10	ATF16V8CZ-15JC ATF16V8CZ-15PC ATF16V8CZ-15SC ATF16V8CZ-15XC	20J 20P3 20S 20X	Commercial (0°C to 70°C)
	12	10	ATF16V8CZ-15JI ATF16V8CZ-15PI ATF16V8CZ-15SI ATF16V8CZ-15XI	20J 20P3 20S 20X	Industrial (-40°C to 85°C)

Note: Shaded parts are being obsoleted in Q3-05 and being replaced by Green parts.

10.2 Using “C” Product for Industrial

To use commercial product for Industrial temperature ranges, down-grade one speed grade from the “I” to the “C” device (7 ns “C” = 10 ns “I”) and de-rate power by 30%.

10.3 Green Package Options (Pb/Halide-free/RoHS Compliant)

t_{PD} (ns)	t_S (ns)	t_{CO} (ns)	Ordering Code	Package	Operation Range
15	12	10	ATF16V8CZ-15JU ATF16V8CZ-15PU ATF16V8CZ-15SU ATF16V8CZ-15XU	20J 20P3 20S 20X	Industrial (-40°C to 85°C)

Package Type	
20J	20-lead, Plastic J-leaded Chip Carrier (PLCC)
20P3	20-lead, 0.300" Wide, Plastic Dual Inline Package (PDIP)
20S	20-lead, 0.300" Wide, Plastic Gull-wing Small Outline (SOIC)
20X	20-lead, 4.4 mm Wide, Plastic Thin Shrink Small Outline (TSSOP)

11. Package Information

11.1 20J – PLCC

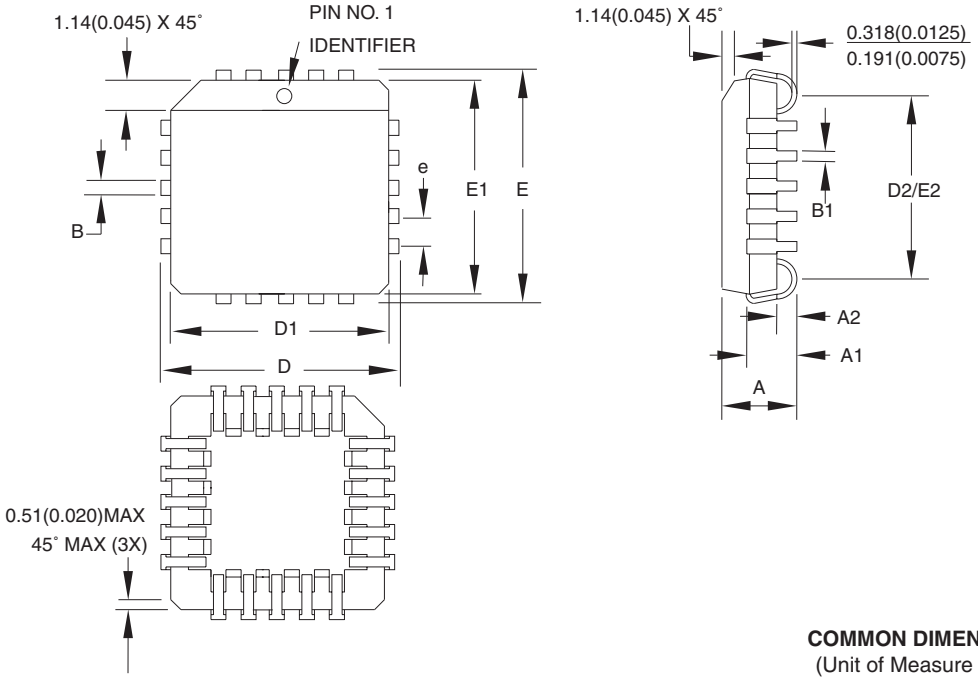

COMMON DIMENSIONS
(Unit of Measure = mm)

SYMBOL	MIN	NOM	MAX	NOTE
A	4.191	–	4.572	
A1	2.286	–	3.048	
A2	0.508	–	–	
D	9.779	–	10.033	
D1	8.890	–	9.042	Note 2
E	9.779	–	10.033	
E1	8.890	–	9.042	Note 2
D2/E2	7.366	–	8.382	
B	0.660	–	0.813	
B1	0.330	–	0.533	
e	1.270 TYP			

Notes:
1. This package conforms to JEDEC reference MS-018, Variation AA.
2. Dimensions D1 and E1 do not include mold protrusion. Allowable protrusion is .010"(0.254 mm) per side. Dimension D1 and E1 include mold mismatch and are measured at the extreme material condition at the upper or lower parting line.
3. Lead coplanarity is 0.004" (0.102 mm) maximum.

10/04/01

	TITLE	DRAWING NO.	REV.
2325 Orchard Parkway San Jose, CA 95131	**20J**, 20-lead, Plastic J-leaded Chip Carrier (PLCC)	20J	B

11.2 20P3 – PDIP

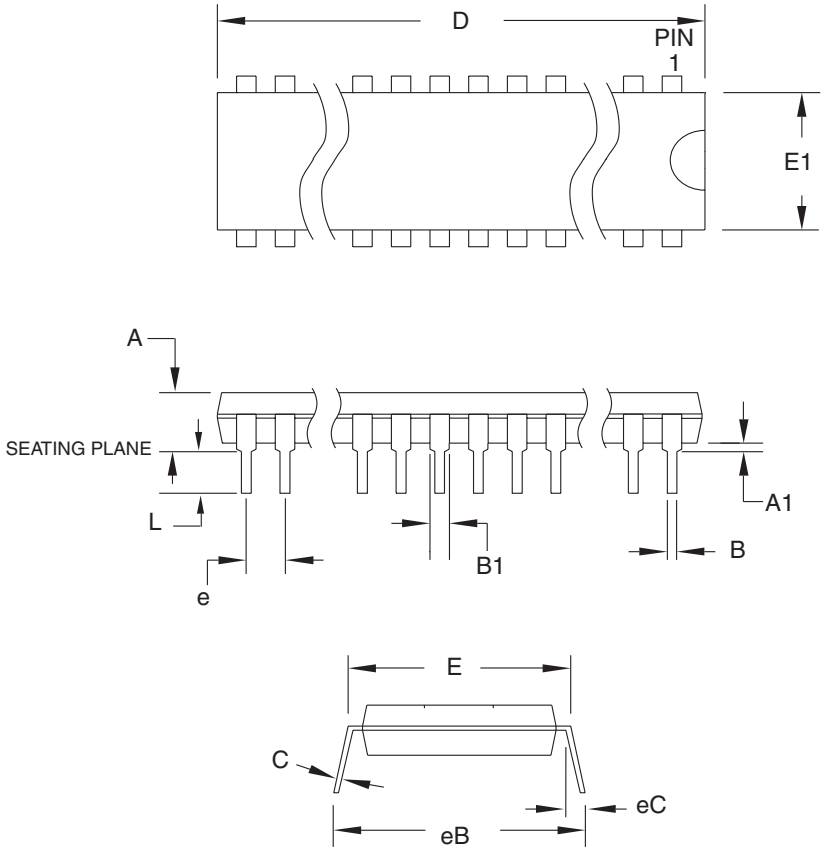

COMMON DIMENSIONS
(Unit of Measure = mm)

SYMBOL	MIN	NOM	MAX	NOTE
A	–	–	5.334	
A1	0.381	–	–	
D	24.892	–	26.924	Note 2
E	7.620	–	8.255	
E1	6.096	–	7.112	Note 2
B	0.356	–	0.559	
B1	1.270	–	1.551	
L	2.921	–	3.810	
C	0.203	–	0.356	
eB	–	–	10.922	
eC	0.000	–	1.524	
e	2.540 TYP			

Notes:
1. This package conforms to JEDEC reference MS-001, Variation AD.
2. Dimensions D and E1 do not include mold Flash or Protrusion. Mold Flash or Protrusion shall not exceed 0.25 mm (0.010").

1/23/04

	TITLE	DRAWING NO.	REV.
2325 Orchard Parkway San Jose, CA 95131	**20P3**, 20-lead (0.300"/7.62 mm Wide) Plastic Dual Inline Package (PDIP)	20P3	D

11.3 20S – SOIC

Dimensions in Millimeters and (Inches).
Controlling dimension: Inches.
JEDEC Standard MS-013

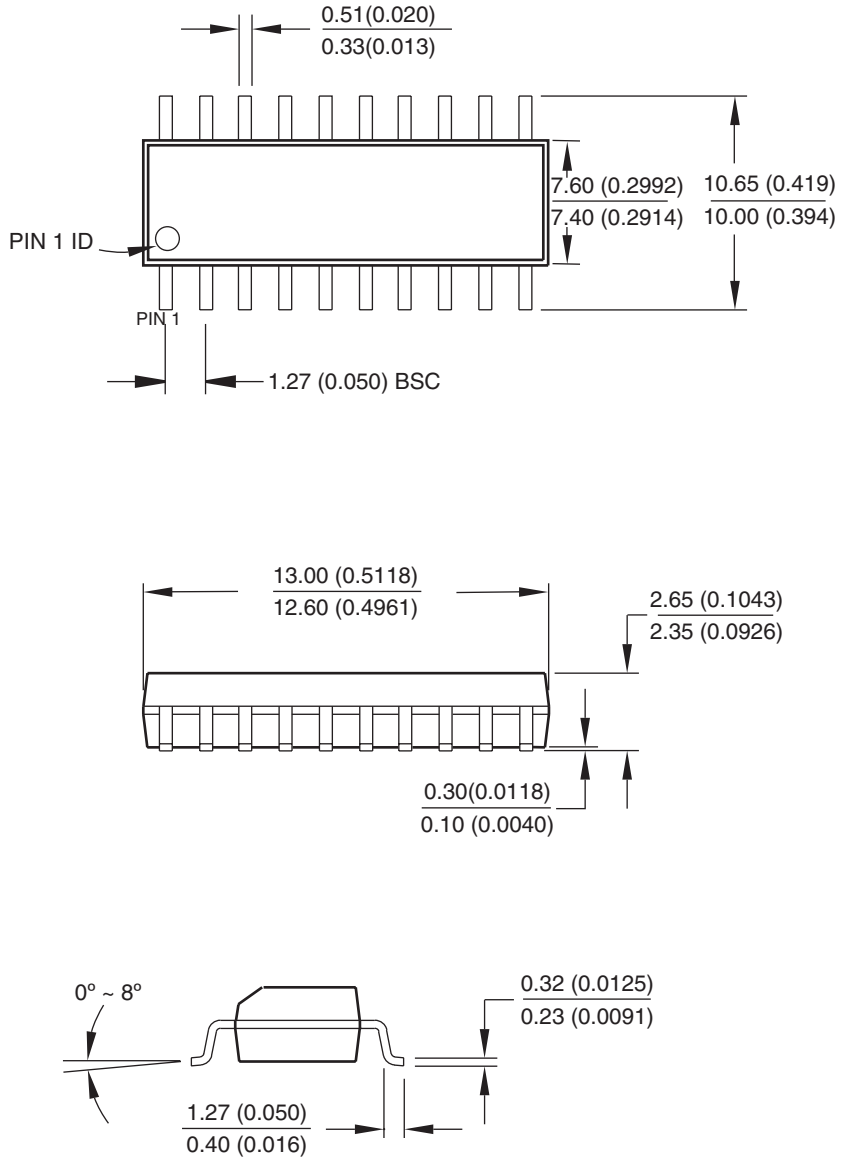

10/23/03

	TITLE	DRAWING NO.	REV.
2325 Orchard Parkway San Jose, CA 95131	**20S**, 20-lead, 0.300" Body, Plastic Gull Wing Small Outline (SOIC)	20S	B

11.4 20X – TSSOP

Dimensions in Millimeters and (Inches).
Controlling dimension: Millimeters.
JEDEC Standard MO-153 AC

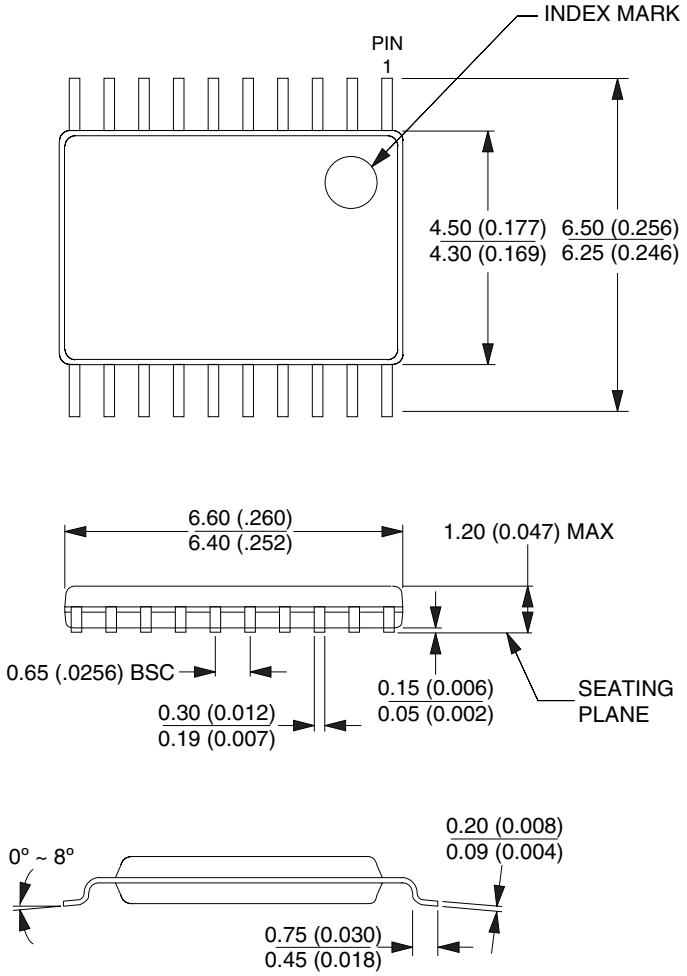

10/23/03

	TITLE	DRAWING NO.	REV.
2325 Orchard Parkway San Jose, CA 95131	**20X**, (Formerly 20T), 20-lead, 4.4 mm Body Width, Plastic Thin Shrink Small Outline Package (TSSOP)	20X	C

12. Revision History

12.1 0453H

1. Green Package options added in 2005.

Atmel Corporation

2325 Orchard Parkway
San Jose, CA 95131, USA
Tel: 1(408) 441-0311
Fax: 1(408) 487-2600

Regional Headquarters

Europe
Atmel Sarl
Route des Arsenaux 41
Case Postale 80
CH-1705 Fribourg
Switzerland
Tel: (41) 26-426-5555
Fax: (41) 26-426-5500

Asia
Room 1219
Chinachem Golden Plaza
77 Mody Road Tsimshatsui
East Kowloon
Hong Kong
Tel: (852) 2721-9778
Fax: (852) 2722-1369

Japan
9F, Tonetsu Shinkawa Bldg.
1-24-8 Shinkawa
Chuo-ku, Tokyo 104-0033
Japan
Tel: (81) 3-3523-3551
Fax: (81) 3-3523-7581

Atmel Operations

Memory
2325 Orchard Parkway
San Jose, CA 95131, USA
Tel: 1(408) 441-0311
Fax: 1(408) 436-4314

Microcontrollers
2325 Orchard Parkway
San Jose, CA 95131, USA
Tel: 1(408) 441-0311
Fax: 1(408) 436-4314

La Chantrerie
BP 70602
44306 Nantes Cedex 3, France
Tel: (33) 2-40-18-18-18
Fax: (33) 2-40-18-19-60

ASIC/ASSP/Smart Cards
Zone Industrielle
13106 Rousset Cedex, France
Tel: (33) 4-42-53-60-00
Fax: (33) 4-42-53-60-01

1150 East Cheyenne Mtn. Blvd.
Colorado Springs, CO 80906, USA
Tel: 1(719) 576-3300
Fax: 1(719) 540-1759

Scottish Enterprise Technology Park
Maxwell Building
East Kilbride G75 0QR, Scotland
Tel: (44) 1355-803-000
Fax: (44) 1355-242-743

RF/Automotive
Theresienstrasse 2
Postfach 3535
74025 Heilbronn, Germany
Tel: (49) 71-31-67-0
Fax: (49) 71-31-67-2340

1150 East Cheyenne Mtn. Blvd.
Colorado Springs, CO 80906, USA
Tel: 1(719) 576-3300
Fax: 1(719) 540-1759

Biometrics/Imaging/Hi-Rel MPU/
High Speed Converters/RF Datacom
Avenue de Rochepleine
BP 123
38521 Saint-Egreve Cedex, France
Tel: (33) 4-76-58-30-00
Fax: (33) 4-76-58-34-80

Literature Requests
www.atmel.com/literature

Disclaimer: The information in this document is provided in connection with Atmel products. No license, express or implied, by estoppel or otherwise, to any intellectual property right is granted by this document or in connection with the sale of Atmel products. **EXCEPT AS SET FORTH IN ATMEL'S TERMS AND CONDITIONS OF SALE LOCATED ON ATMEL'S WEB SITE, ATMEL ASSUMES NO LIABILITY WHATSOEVER AND DISCLAIMS ANY EXPRESS, IMPLIED OR STATUTORY WARRANTY RELATING TO ITS PRODUCTS INCLUDING, BUT NOT LIMITED TO, THE IMPLIED WARRANTY OF MERCHANTABILITY, FITNESS FOR A PARTICULAR PURPOSE, OR NON-INFRINGEMENT. IN NO EVENT SHALL ATMEL BE LIABLE FOR ANY DIRECT, INDIRECT, CONSEQUENTIAL, PUNITIVE, SPECIAL OR INCIDENTAL DAMAGES (INCLUDING, WITHOUT LIMITATION, DAMAGES FOR LOSS OF PROFITS, BUSINESS INTERRUPTION, OR LOSS OF INFORMATION) ARISING OUT OF THE USE OR INABILITY TO USE THIS DOCUMENT, EVEN IF ATMEL HAS BEEN ADVISED OF THE POSSIBILITY OF SUCH DAMAGES.** Atmel makes no representations or warranties with respect to the accuracy or completeness of the contents of this document and reserves the right to make changes to specifications and product descriptions at any time without notice. Atmel does not make any commitment to update the information contained herein. Unless specifically provided otherwise, Atmel products are not suitable for, and shall not be used in, automotive applications. Atmel's products are not intended, authorized, or warranted for use as components in applications intended to support or sustain life.

© Atmel Corporation 2005. **All rights reserved.** Atmel®, logo and combinations thereof, Everywhere You Are® and others, are registered trademarks or trademarks of Atmel Corporation or its subsidiaries. Other terms and product names may be trademarks of others.

Printed on recycled paper.

0453H–PLD–7/05

Компания «ЭлектроПласт» предлагает заключение долгосрочных отношений при поставках импортных электронных компонентов на взаимовыгодных условиях!

Наши преимущества:

- Оперативные поставки широкого спектра электронных компонентов отечественного и импортного производства напрямую от производителей и с крупнейших мировых складов;
- Поставка более 17-ти миллионов наименований электронных компонентов;
- Поставка сложных, дефицитных, либо снятых с производства позиций;
- Оперативные сроки поставки под заказ (от 5 рабочих дней);
- Экспресс доставка в любую точку России;
- Техническая поддержка проекта, помощь в подборе аналогов, поставка прототипов;
- Система менеджмента качества сертифицирована по Международному стандарту ISO 9001;
- Лицензия ФСБ на осуществление работ с использованием сведений, составляющих государственную тайну;
- Поставка специализированных компонентов (Xilinx, Altera, Analog Devices, Intersil, Interpoint, Microsemi, Aeroflex, Peregrine, Syfer, Eurofarad, Texas Instrument, Miteq, Cobham, E2V, MA-COM, Hittite, Mini-Circuits,General Dynamics и др.);

Помимо этого, одним из направлений компании «ЭлектроПласт» является направление «Источники питания». Мы предлагаем Вам помощь Конструкторского отдела:

- Подбор оптимального решения, техническое обоснование при выборе компонента;
- Подбор аналогов;
- Консультации по применению компонента;
- Поставка образцов и прототипов;
- Техническая поддержка проекта;
- Защита от снятия компонента с производства.

Как с нами связаться

Телефон: 8 (812) 309 58 32 (многоканальный)
Факс: 8 (812) 320-02-42
Электронная почта: org@eplast1.ru
Адрес: 198099, г. Санкт-Петербург, ул. Калинина, дом 2, корпус 4, литера А.