3M™ MetPak™ 2-FB Shroud

2 mm Backplane, Rear Plug

MP2 Series

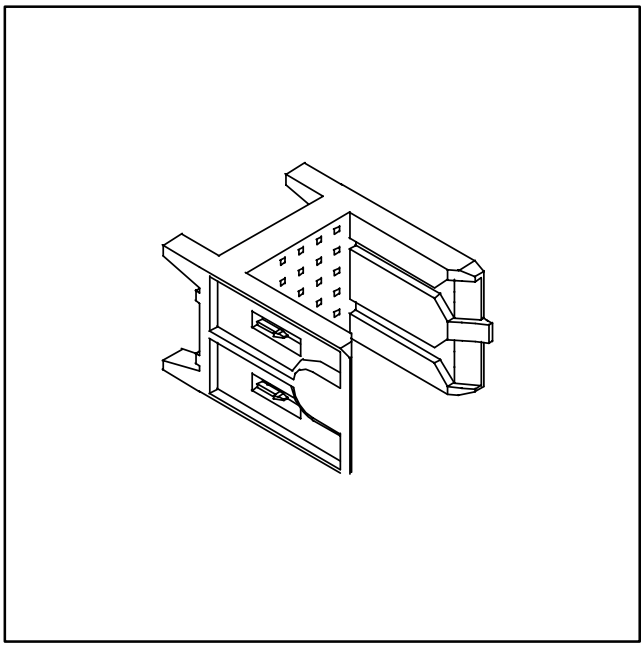

- Ideal for backplane plug-up/feed-through applications
- Available in three stand-off heights

Date Modified: May 30, 2003

TS-1130-01
Sheet 1 of 3

Physical

Insulation
Material: High Temp LCP
Flammability: UL 94V-0
Color: Beige

Electrical

N/A

Environmental

Temperature Ratings: -55°C to +125°C

MetPak is a trademark of 3M Company.
Futurebus+ is a registered trademark of the Institute of Electrical and Electronic Engineers, Inc. (IEEE).

UL File No: E68080

3M™ MetPak™ 2-FB Shroud

2 mm Backplane, Rear Plug

MP2 Series

4-Row

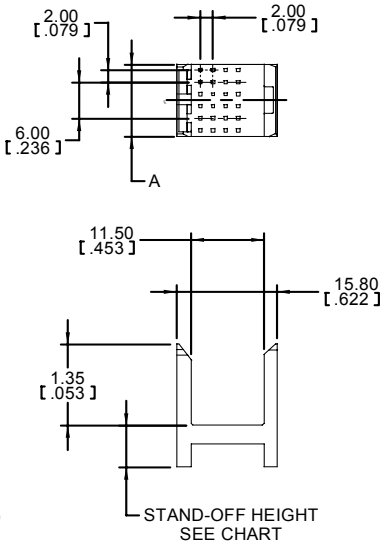

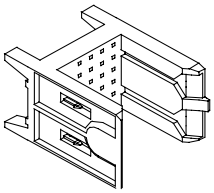

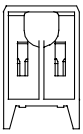

Interference-Fit Cores
4 Per Module
1 Module = 4 Rows x 6 Positions

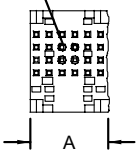

BOTTOM VIEW

mm
[in.]

Tolerance Unless Noted		
	0.0	0.00
mm	±.1	±.10

[ ] Dimensions for Reference Only

REAR PLUG UP MATE LENGTHS								
METPAK 2-FB SHROUD	METPAK 2-FB HEADER	PRINTED CIRCUIT BOARD THICKNESS						
		1.60mm (.062in.)	2.40mm (.093in.)	3.20mm (.125in.)	4.00mm (.156in.)	4.80mm (.187in.)	5.60mm (.218in.)	6.40mm (.250in.)
MP2-HSXXX-41	MP2-HXXX-4XP5-XXXX	----------	7.70mm	6.90mm	6.10mm	5.30mm	----------	----------
	MP2-HXXX-4XP7-XXXX	----------	----------	----------	----------	----------	7.90mm	7.10mm
MP2-HSXXX-42	MP2-HXXX-4XP5-XXXX	7.60mm	6.80mm	6.00mm	5.20mm	4.40mm	----------	----------
	MP2-HXXX-4XP7-XXXX	----------	----------	----------	----------	----------	7.00mm	6.20mm
MP2-HSXXX-43	MP2-HXXX-4XP5-XXXX	5.10mm	----------	----------	----------	----------	----------	----------
	MP2-HXXX-4XP7-XXXX	----------	7.70mm	6.90mm	6.10mm	5.30mm	4.50mm	----------

DESCRIPTION	CONTACT QUANTITY	A	STAND-OFF HEIGHT		
			MP2-HSXXX-41	MP2-HSXXX-42	MP2-HSXXX-43
MP2-HS024-4X	24	11.95 mm	3.50 mm	4.40 mm	6.90 mm
MP2-HS048-4X	48	23.95 mm	3.50 mm	4.40 mm	6.90 mm
MP2-HS072-4X	72	35.95 mm	3.50 mm	4.40 mm	6.90 mm
MP2-HS096-4X	96	47.95 mm	3.50 mm	4.40 mm	6.90 mm
MP2-HS120-4X	120	59.95 mm	3.50 mm	4.40 mm	6.90 mm
MP2-HS144-4X	144	71.95 mm	3.50 mm	4.40 mm	6.90 mm
MP2-HS168-4X	168	83.95 mm	3.50 mm	4.40 mm	6.90 mm
MP2-HS192-4X	192	95.95 mm	3.50 mm	4.40 mm	6.90 mm

Ordering Information

MP2 - HS XXX - X X

Number of Positions
See Table

Rows
4 = 4 Rows
5 = 5 Rows

Stand-off Height
1 = 3.50 mm [0.138″]
2 = 4.40 mm [0.173″]
3 = 6.90 mm [0.271″]

TS-1130-01
Sheet 2 of 3

3M is a trademark of 3M Company.

5-Row

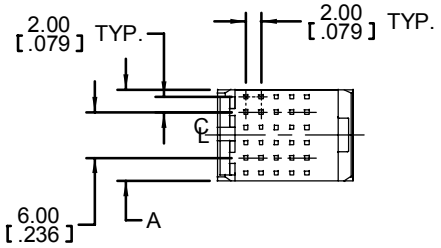

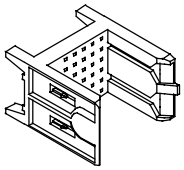

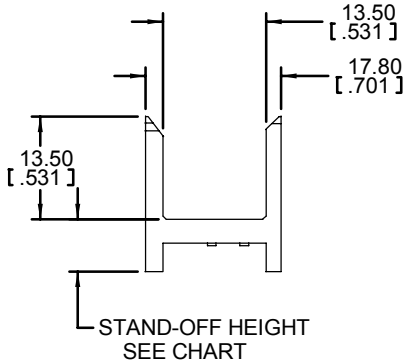

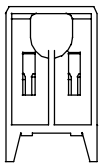

mm
[in.]

Tolerance Unless Noted		
	0.0	0.00
mm	±.1	±.10

[ ] Dimensions for Reference Only

REAR PLUG UP MATE LENGTHS								
METPAK 2 SHROUD	METPAK 2-FB HEADER	PRINTED CIRCUIT BOARD THICKNESS						
		1.60mm (.062in.)	2.40mm (.093in.)	3.20mm (.125in.)	4.00mm (.156in.)	4.80mm (.187in.)	5.60mm (.218in.)	6.40mm (.250in.)
MP2-HSXXX-51	MP2-HXXX-5XP5-XXXX	----------	7.70mm	6.90mm	6.10mm	5.30mm	----------	----------
	MP2-HXXX-5XP7-XXXX	----------	----------	----------	----------	----------	7.90mm	7.10mm
MP2-HSXXX-52	MP2-HXXX-5XP5-XXXX	7.60mm	6.80mm	6.00mm	5.20mm	4.40mm	----------	----------
	MP2-HXXX-5XP7-XXXX	----------	----------	----------	----------	----------	7.00mm	6.20mm
MP2-HSXXX-53	MP2-HXXX-5XP5-XXXX	5.10mm	----------	----------	----------	----------	----------	----------
	MP2-HXXX-5XP7-XXXX	----------	7.70mm	6.90mm	6.10mm	5.30mm	4.50mm	----------

DESCRIPTION	CONTACT QUANTITY	A	STAND-OFF HEIGHT		
			MP2-HSXXX-51	MP2-HSXXX-52	MP2-HSXXX-53
MP2-HS030-5X	30	11.95 mm	3.50 mm	4.40 mm	6.90 mm
MP2-HS060-5X	60	23.95 mm	3.50 mm	4.40 mm	6.90 mm
MP2-HS090-5X	90	35.95 mm	3.50 mm	4.40 mm	6.90 mm
MP2-HS120-5X	120	47.95 mm	3.50 mm	4.40 mm	6.90 mm
MP2-HS150-5X	150	59.95 mm	3.50 mm	4.40 mm	6.90 mm
MP2-HS180-5X	180	71.95 mm	3.50 mm	4.40 mm	6.90 mm
MP2-HS210-5X	210	83.95 mm	3.50 mm	4.40 mm	6.90 mm
MP2-HS240-5X	240	95.95 mm	3.50 mm	4.40 mm	6.90 mm

TS-1130-01
Sheet 3 of 3

3M is a trademark of 3M Company.

Important Notice

All statements, technical information, and recommendations related to 3M's products are based on information believed to be reliable, but the accuracy or completeness is not guaranteed. Before using this product, you must evaluate it and determine if it is suitable for your intended application. You assume all risks and liability associated with such use. Any statements related to the product which are not contained in 3M's current publications, or any contrary statements contained on your purchase order shall have no force or effect unless expressly agreed upon, in writing, by an authorized officer of 3M.

Warranty; Limited Remedy; Limited Liability.

This product will be free from defects in material and manufacture for a period of 1 year from the date of purchase. **3M MAKES NO OTHER WARRANTIES INCLUDING, BUT NOT LIMITED TO, ANY IMPLIED WARRANTY OF MERCHANTABILITY OR FITNESS FOR A PARTICULAR PURPOSE.** If this product is defective within the warranty period stated above, your exclusive remedy shall be, at 3M's option, to replace or repair the 3M product or refund the purchase price of the 3M product. **Except where prohibited by law, 3M will not be liable for any loss or damage arising from this 3M product, whether direct, indirect, special, incidental or consequential regardless of the legal theory asserted.**

3M

Electronic and Interconnect Solutions Division

6801 River Place Blvd.
Austin, TX 78726-9000
www.3M.com/eisd

© 3M 2003

Компания «ЭлектроПласт» предлагает заключение долгосрочных отношений при поставках импортных электронных компонентов на взаимовыгодных условиях!

Наши преимущества:

- Оперативные поставки широкого спектра электронных компонентов отечественного и импортного производства напрямую от производителей и с крупнейших мировых складов;
- Поставка более 17-ти миллионов наименований электронных компонентов;
- Поставка сложных, дефицитных, либо снятых с производства позиций;
- Оперативные сроки поставки под заказ (от 5 рабочих дней);
- Экспресс доставка в любую точку России;
- Техническая поддержка проекта, помощь в подборе аналогов, поставка прототипов;
- Система менеджмента качества сертифицирована по Международному стандарту ISO 9001;
- Лицензия ФСБ на осуществление работ с использованием сведений, составляющих государственную тайну;
- Поставка специализированных компонентов (Xilinx, Altera, Analog Devices, Intersil, Interpoint, Microsemi, Aeroflex, Peregrine, Syfer, Eurofarad, Texas Instrument, Miteq, Cobham, E2V, MA-COM, Hittite, Mini-Circuits,General Dynamics и др.);

Помимо этого, одним из направлений компании «ЭлектроПласт» является направление «Источники питания». Мы предлагаем Вам помощь Конструкторского отдела:

- Подбор оптимального решения, техническое обоснование при выборе компонента;
- Подбор аналогов;
- Консультации по применению компонента;
- Поставка образцов и прототипов;
- Техническая поддержка проекта;
- Защита от снятия компонента с производства.

Как с нами связаться

Телефон: 8 (812) 309 58 32 (многоканальный)
Факс: 8 (812) 320-02-42
Электронная почта: org@eplast1.ru
Адрес: 198099, г. Санкт-Петербург, ул. Калинина, дом 2, корпус 4, литера А.