PSoC® 5LP: CY8C56LP Family Datasheet

Programmable System-on-Chip (PSoC®)

General Description

With its unique array of configurable blocks, PSoC® 5LP is a true system level solution providing MCU, memory, analog, and digital peripheral functions in a single chip. The CY8C56LP family offers a modern method of signal acquisition, signal processing, and control with high accuracy, high bandwidth, and high flexibility. Analog capability spans the range from thermocouples (near DC voltages) to ultrasonic signals. The CY8C56LP family can handle dozens of data acquisition channels and analog inputs on every general-purpose input/output (GPIO) pin. The CY8C56LP family is also a high performance configurable digital system with some part numbers including interfaces such as USB, multimaster inter-integrated circuit (I2C), and controller area network (CAN). In addition to communication interfaces, the CY8C56LP family has an easy to configure logic array, flexible routing to all I/O pins, and a high performance 32-bit ARM® Cortex™-M3 microprocessor core. You can easily create system level designs using a rich library of prebuilt components and boolean primitives using PSoC Creator™, a hierarchical schematic design entry tool. The CY8C56LP family provides unparalleled opportunities for analog and digital bill of materials integration while easily accommodating last minute design changes through simple firmware updates.

Features

- 32-bit ARM Cortex-M3 CPU core
  - DC to 67 MHz operation
  - Flash program memory, up to 256 KB, 100,000 write cycles, 20 year retention, and multiple security features
  - Up to 32-KB flash error correcting code (ECC) or configuration storage
  - Up to 64 KB SRAM
  - 2-KB electrically erasable programmable read-only memory (EEPROM) memory, 1 M cycles, and 20 years retention
  - 24-channel direct memory access (DMA) with multilayer AHB[1] bus access
    - Programmable chained descriptors and priorities
    - High bandwidth 32-bit transfer support
- Low voltage, ultra low power
  - Wide operating voltage range: 0.5 V to 5.5 V
  - High efficiency boost regulator from 0.5 V input to 1.8 V to 5.0 V output
  - 3.1 mA at 6 MHz
  - Low-power modes including:
    - 2 µA sleep mode with real time clock and low voltage detect (LVD) interrupt
    - 300 nA hibernate mode with RAM retention
- Versatile I/O system
  - 28 to 72 I/Os (62 GPIOs, 8 SIOs, 2 USBIOs[2])
  - Any GPIOs to any digital or analog peripheral routability
  - LCD direct drive from any GPIO, up to 46 × 16 segments
  - CapSense® support from any GPIO[3]
  - 1.2 V to 5.5 V I/O interface voltages, up to four domains
  - Maskable, independent IRQ on any pin or port
  - Schmitt-trigger TTL inputs
  - All GPIOs configurable as open drain high/low, pull-up/pull-down, High Z, or strong output
  - Configurable GPIO pin state at power-on reset (POR)
  - 25 mA sink on SIO
- Digital peripherals
  - 20 to 24 programmable PLD based universal digital blocks (UDB)
  - Full CAN 2.0b 16 RX, 8 TX buffers[2]
  - Full-Speed (FS) USB 2.0 12 Mbps using internal oscillator[2]
  - Four 16-bit configurable timer, counter, and PWM blocks
  - 67-MHz, 24-bit fixed point digital filter block (DFB) to implement FIR and IIR filters
  - Library of standard peripherals
    - 8-, 16-, 24-, and 32-bit timers, counters, and PWMs
    - Serial peripheral interface (SPI), universal asynchronous transmitter receiver (UART), I^2C
    - Many others available in catalog
  - Library of advanced peripherals
    - Cyclic redundancy check (CRC)
    - Pseudo random sequence (PRS) generator
    - LIN bus 2.0
    - Quadrature decoder
- Analog peripherals (1.71 V ≤ V_{DDA} ≤ 5.5 V)
  - 1.024 V±0.1% internal voltage reference across –40 °C to +85 °C
  - Configurable delta-sigma ADC with 8- to12-bit resolution[2]
    - Programmable gain stage: ×0.25 to ×16
    - 12-bit mode, 192-ksps, 66-dB signal to noise and distortion ratio (SINAD), ±1-bit INL/DNL
  - Up to two SAR ADCs, each 12-bit at 1 Msps
  - Four 8-bit 8 Msps IDACs or 1 Msps VDACs
  - Four comparators with 95 ns response time
  - Four uncommitted opamps with 25 mA drive capability
  - Four configurable multifunction analog blocks. Example configurations are PGA, TIA. Mixer and sample and hold
  - CapSense support
- Programming, debug, and trace
  - JTAG (4 wire), serial-wire debug (SWD) (2 wire), single-wire viewer (SWV), and TRACEPORT interfaces
  - Cortex-M3 flash patch and breakpoint (FPB) block
  - Cortex-M3 Embedded Trace Macrocell™ (ETM™) generates an instruction trace stream.
  - Cortex-M3 data watchpoint and trace (DWT) generates data trace information
  - Cortex-M3 Instrumentation Trace Macrocell (ITM) can be used for printf-style debugging
  - DWT, ETM, and ITM blocks communicate with off-chip debug and trace systems via the SWV or TRACEPORT
  - Bootloader programming supportable through I^2C, SPI, UART, USB, and other interfaces
- Precision, programmable clocking
  - 3 to 62 MHz internal oscillator over full temperature and voltage range
  - 4 to 25 MHz crystal oscillator for crystal PPM accuracy
  - Internal PLL clock generation up to 67 MHz
  - 32.768-kHz watch crystal oscillator
  - Low-power internal oscillator at 1, 33, and 100 kHz
- Temperature and packaging
  - –40 °C to +85 °C degrees industrial temperature
  - 68-pin QFN and 100-pin TQFP package options

Notes
1. AHB – AMBA (advanced microcontroller bus architecture) high-performance bus, an ARM data transfer bus
2. This feature on select devices only. See Ordering Information on page 113 for details.
3. GPIOs with opamp outputs are not recommended for use with CapSense.

Contents

1. Architectural Overview 3
2. Pinouts 5
3. Pin Descriptions 9
4. CPU 10
4.1 ARM Cortex-M3 CPU 10
4.2 Cache Controller 11
4.3 DMA and PHUB 12
4.4 Interrupt Controller 14
5. Memory 16
5.1 Static RAM 16
5.2 Flash Program Memory 16
5.3 Flash Security 16
5.4 EEPROM 16
5.5 Nonvolatile Latches (NVLs) 17
5.6 External Memory Interface 18
5.7 Memory Map 19
6. System Integration 20
6.1 Clocking System 20
6.2 Power System 24
6.3 Reset 27
6.4 I/O System and Routing 28
7. Digital Subsystem 34
7.1 Example Peripherals 35
7.2 Universal Digital Block 36
7.3 UDB Array Description 40
7.4 DSI Routing Interface Description 41
7.5 CAN 42
7.6 USB 44
7.7 Timers, Counters, and PWMs 45
7.8 I^2C 45
7.9 Digital Filter Block 46
8. Analog Subsystem 46
8.1 Analog Routing 48
8.2 Delta-sigma ADC 50
8.3 Successive Approximation ADCs 51
8.4 Comparators 51
8.5 Opamps 53
8.6 Programmable SC/CT Blocks 53
8.7 LCD Direct Drive 55
8.8 CapSense 55
8.9 Temp Sensor 55
8.10 DAC 56
8.11 Up/Down Mixer 56
8.12 Sample and Hold 57
9. Programming, Debug Interfaces, Resources 57
9.1 JTAG Interface 58
9.2 SWD Interface 59
9.3 Debug Features 60
9.4 Trace Features 60
9.5 SWV and TRACEPORT Interfaces 60
9.6 Programming Features 60
9.7 Device Security 60
10. Development Support 61
10.1 Documentation 61
10.2 Online 61
10.3 Tools 61
11. Electrical Specifications 62
11.1 Absolute Maximum Ratings 62
11.2 Device Level Specifications 63
11.3 Power Regulators 66
11.4 Inputs and Outputs 69
11.5 Analog Peripherals 77
11.6 Digital Peripherals 97
11.7 Memory 102
11.8 PSoC System Resources 106
11.9 Clocking 109
12. Ordering Information 113
12.1 Part Numbering Conventions 114
13. Packaging 115
14. Acronyms 117
15. Reference Documents 118
16. Document Conventions 119
16.1 Units of Measure 119
17. Revision History 120
18. Sales, Solutions, and Legal Information 120

1. Architectural Overview

Introducing the CY8C56LP family of ultra low power, flash Programmable System-on-Chip (PSoC) devices, part of a scalable 8-bit PSoC 3 and 32-bit PSoC 5LP platform. The CY8C56LP family provides configurable blocks of analog, digital, and interconnect circuitry around a CPU subsystem. The combination of a CPU with a flexible analog subsystem, digital subsystem, routing, and I/O enables a high level of integration in a wide variety of consumer, industrial, and medical applications.

Figure 1-1. Simplified Block Diagram

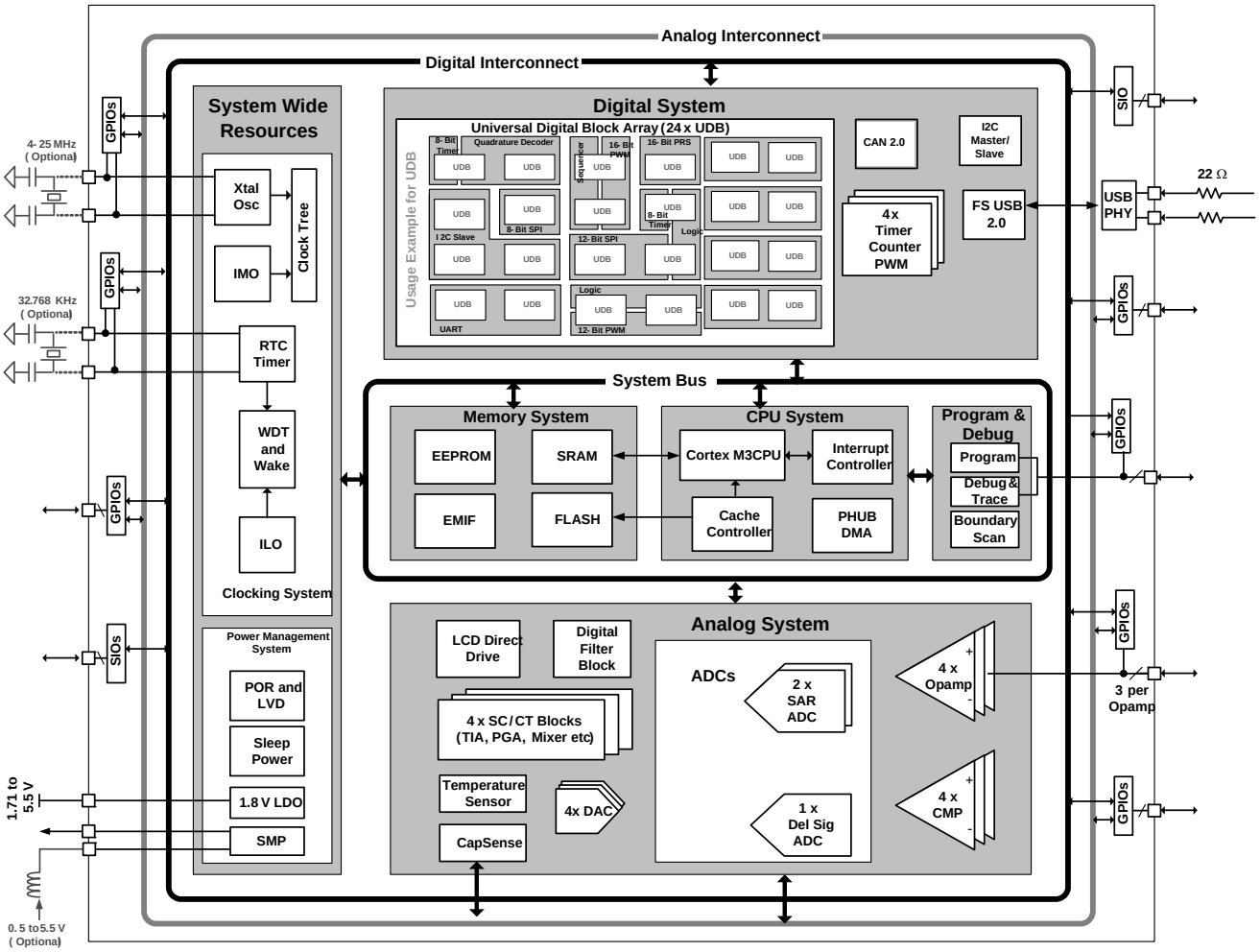

Figure 1-1 illustrates the major components of the CY8C56LP family. They are:

- ARM Cortex-M3 CPU subsystem
- Nonvolatile subsystem
- Programming, debug, and test subsystem
- Inputs and outputs
- Clocking
- Power
- Digital subsystem
- Analog subsystem

PSoC's digital subsystem provides half of its unique configurability. It connects a digital signal from any peripheral to any pin through the digital system interconnect (DSI). It also provides functional flexibility through an array of small, fast, low power UDBs. PSoC Creator provides a library of pre-built and tested standard digital peripherals (UART, SPI, LIN, PRS, CRC, timer, counter, PWM, AND, OR, and so on) that are mapped to the UDB array. You can also easily create a digital circuit using boolean primitives by means of graphical design entry. Each UDB contains programmable array logic (PAL)/programmable logic device (PLD) functionality, together with a small state machine engine to support a wide variety of peripherals. In addition to the flexibility of the UDB array, PSoC also provides configurable digital blocks targeted at specific functions. For the CY8C56LP family these blocks can include four 16-bit timer, counter, and PWM blocks; I^2C slave, master, and multi-master; Full-Speed USB; and Full CAN 2.0.

For more details on the peripherals see the "Example Peripherals" section on page 35 of this datasheet. For information on UDBs, DSI, and other digital blocks, see the "Digital Subsystem" section on page 34 of this datasheet.

PSoC's analog subsystem is the second half of its unique configurability. All analog performance is based on a highly accurate absolute voltage reference with less than 0.1% error over temperature and voltage. The configurable analog subsystem includes:

- Analog muxes
- Comparators
- Analog mixers
- Voltage references
- ADCs
- DACs
- DFB

All GPIO pins can route analog signals into and out of the device using the internal analog bus. This allows the device to interface up to 62 discrete analog signals.

Some CY8C56LP devices offer a fast, accurate, configurable delta-sigma ADC with these features:

- Less than 100 µV offset
- A gain error of 0.2 percent
- INL less than ±1 LSB
- DNL less than ±1 LSB
- SINAD better than 66 dB

The CY8C56LP family also offers one or two successive approximation register (SAR) ADCs, depending on device selected. Featuring 12-bit conversions at up to 1 M samples per second, they also offer low nonlinearity and offset errors and SNR better than 70 dB. They are well suited for a variety of higher speed analog applications.

The output of either ADC can optionally feed the programmable DFB via DMA without CPU intervention. You can configure the DFB to perform IIR and FIR digital filters and several user defined custom functions. The DFB can implement filters with up to 64 taps. It can perform a 48-bit multiply-accumulate (MAC) operation in one clock cycle.

Four high speed voltage or current DACs support 8-bit output signals at an update rate of up to 8 Msps. They can be routed out of any GPIO pin. You can create higher resolution voltage PWM DAC outputs using the UDB array. This can be used to create a pulse width modulated (PWM) DAC of up to 10 bits, at up to 48 kHz. The digital DACs in each UDB support PWM, PRS, or delta-sigma algorithms with programmable widths.

In addition to the ADCs, DACs, and DFB, the analog subsystem provides multiple:

- Comparators
- Uncommitted opamps
- Configurable switched capacitor/continuous time (SC/CT) blocks. These support:
  - Transimpedance amplifiers
  - Programmable gain amplifiers
  - Mixers
  - Other similar analog components

See the "Analog Subsystem" section on page 46 of this datasheet for more details.

PSoC's CPU subsystem is built around a 32-bit three-stage pipelined ARM Cortex-M3 processor running at up to 67 MHz. The Cortex-M3 includes a tightly integrated nested vectored interrupt controller (NVIC) and various debug and trace modules. The overall CPU subsystem includes a DMA controller, flash cache, and RAM. The NVIC provides low latency, nested interrupts, and tail-chaining of interrupts and other features to increase the efficiency of interrupt handling. The DMA controller enables peripherals to exchange data without CPU involvement. This allows the CPU to run slower (saving power) or use those CPU cycles to improve the performance of firmware algorithms. The flash cache also reduces system power consumption by allowing less frequent flash access.

PSoC's nonvolatile subsystem consists of flash, byte-writeable EEPROM, and nonvolatile configuration options. It provides up to 256 KB of on-chip flash. The CPU can reprogram individual blocks of flash, enabling boot loaders. You can enable an ECC for high reliability applications. A powerful and flexible protection model secures the user's sensitive information, allowing selective memory block locking for read and write protection. Two KB of byte-writable EEPROM is available on-chip to store application data. Additionally, selected configuration options such as boot speed and pin drive mode are stored in nonvolatile memory. This allows settings to activate immediately after power on reset (POR).

The three types of PSoC I/O are extremely flexible. All I/Os have many drive modes that are set at POR. PSoC also provides up to four I/O voltage domains through the VDDIO pins. Every GPIO has analog I/O, LCD drive, CapSense, flexible interrupt generation, slew rate control, and digital I/O capability. The SIOs on PSoC allow V_{OH} to be set independently of VDDIO when used as outputs. When SIOs are in input mode they are high impedance. This is true even when the device is not powered or when the pin voltage goes above the supply voltage. This makes the SIO ideally suited for use on an I^2C bus where the PSoC may not be powered when other devices on the bus are. The SIO pins also have high current sink capability for applications such as LED drives. The programmable input threshold feature of the SIO can be used to make the SIO function as a general purpose analog comparator. For devices with FS USB the USB physical interface is also provided (USBIO). When not using USB these pins may also be used for limited digital functionality and device programming. All the features of the PSoC I/Os are covered in detail in the "I/O System and Routing" section on page 28 of this datasheet.

The PSoC device incorporates flexible internal clock generators, designed for high stability and factory trimmed for high accuracy. The Internal Main Oscillator (IMO) is the master clock base for the system, and has 1% accuracy at 3 MHz. The IMO can be configured to run from 3 MHz up to 62 MHz. Multiple clock derivatives can be generated from the main clock frequency to meet application needs. The device provides a PLL to generate system clock frequencies up to 67 MHz from the IMO, external crystal, or external reference clock. It also contains a separate,

very low power internal low-speed oscillator (ILO) for the sleep and watchdog timers. A 32.768-kHz external watch crystal is also supported for use in RTC applications. The clocks, together with programmable clock dividers, provide the flexibility to integrate most timing requirements.

The CY8C56LP family supports a wide supply operating range from 1.71 to 5.5 V. This allows operation from regulated supplies such as 1.8 ± 5%, 2.5 V ±10%, 3.3 V ± 10%, or 5.0 V ± 10%, or directly from a wide range of battery types. In addition, it provides an integrated high efficiency synchronous boost converter that can power the device from supply voltages as low as 0.5 V. This enables the device to be powered directly from a single battery. In addition, you can use the boost converter to generate other voltages required by the device, such as a 3.3 V supply for LCD glass drive. The boost's output is available on the VBOOST pin, allowing other devices in the application to be powered from the PSoC.

PSoC supports a wide range of low power modes. These include a 300 nA hibernate mode with RAM retention and a 2 µA sleep mode with RTC. In the second mode the optional 32.768-kHz watch crystal runs continuously and maintains an accurate RTC.

Power to all major functional blocks, including the programmable digital and analog peripherals, can be controlled independently by firmware. This allows low power background processing when some peripherals are not in use. This, in turn, provides a total device current of only 3.1 mA when the CPU is running at 6 MHz.

The details of the PSoC power modes are covered in the "Power System" section on page 24 of this datasheet.

PSoC uses JTAG (4 wire) or SWD (2 wire) interfaces for programming, debug, and test. Using these standard interfaces you can debug or program the PSoC with a variety of hardware solutions from Cypress or third party vendors. The Cortex-M3 debug and trace modules include Flash Patch and Breakpoint (FPB), Data Watchpoint and Trace (DWT), Embedded Trace Macrocell (ETM), and Instrumentation Trace Macrocell (ITM). These modules have many features to help solve difficult debug and trace problems. Details of the programming, test, and debugging interfaces are discussed in the "Programming, Debug Interfaces, Resources" section on page 57 of this datasheet.

2. Pinouts

Each VDDIO pin powers a specific set of I/O pins. (The USBIOs are powered from VDDD.) Using the VDDIO pins, a single PSoC can support multiple voltage levels, reducing the need for off-chip level shifters. The black lines drawn on the pinout diagrams in Figure 2-3 and Figure 2-4 show the pins that are powered by each VDDIO.

Each VDDIO may source up to 100 mA total to its associated I/O pins, as shown in Figure 2-1.

Figure 2-1. VDDIO Current Limit

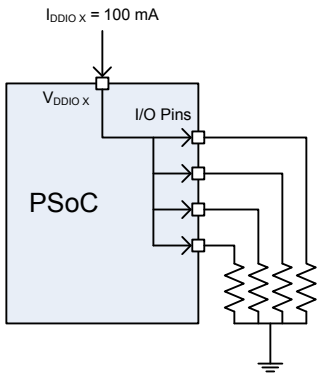

Conversely, for the 100-pin and 68-pin devices, the set of I/O pins associated with any VDDIO may sink up to 100 mA total, as shown in Figure 2-2.

Figure 2-2. I/O Pins Current Limit

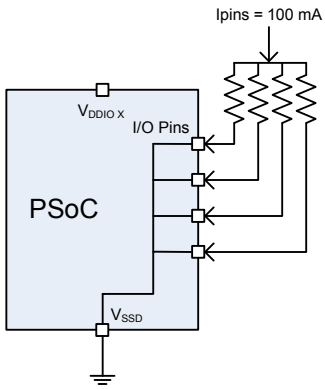

Note
4. Pins are Do Not Use (DNU) on devices without USB. The pin must be left floating.

Figure 2-3. 68-pin QFN Part Pinout[5]

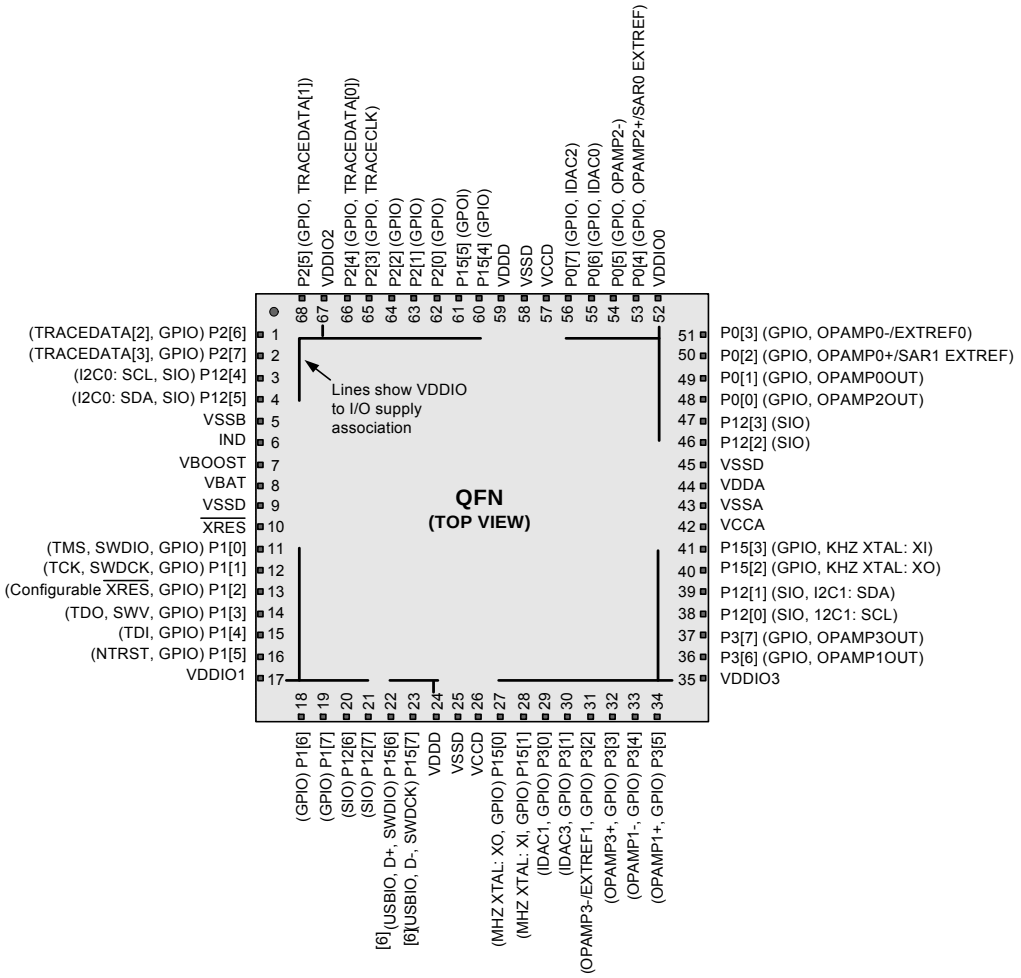

Notes

5. The center pad on the QFN package should be connected to digital ground (VSSD) for best mechanical, thermal, and electrical performance. If not connected to ground, it should be electrically floated and not connected to any other signal.
6. Pins are Do Not Use (DNU) on devices without USB. The pin must be left floating.

Figure 2-4. 100-pin TQFP Part Pinout

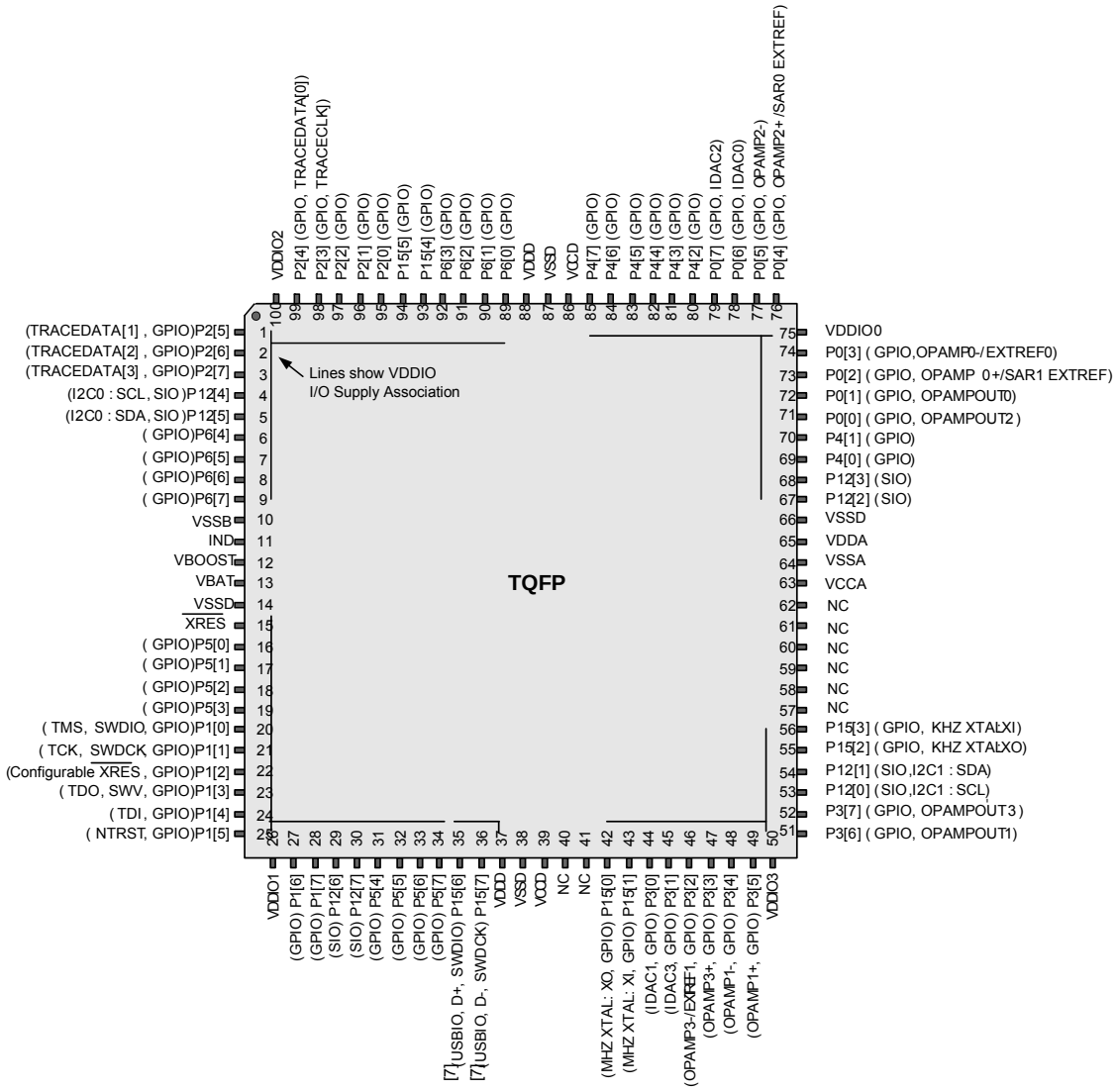

Figure 2-5 and Figure 2-6 on page 8 show an example schematic and an example PCB layout, for the 100-pin TQFP part, for optimal analog performance on a 2-layer board.

- The two pins labeled VDDD must be connected together.
- The two pins labeled VCCD must be connected together, with capacitance added, as shown in Figure 2-5 on page 8 and Power System on page 24. The trace between the two VCCD pins should be as short as possible.
- The two pins labeled VSSD must be connected together.

For information on circuit board layout issues for mixed signals, refer to the application note AN57821 - Mixed Signal Circuit Board Layout Considerations for PSoC® 3 and PSoC 5.

Note
7. Pins are Do Not Use (DNU) on devices without USB. The pin must be left floating.

Figure 2-5. Example Schematic for 100-pin TQFP Part with Power Connections

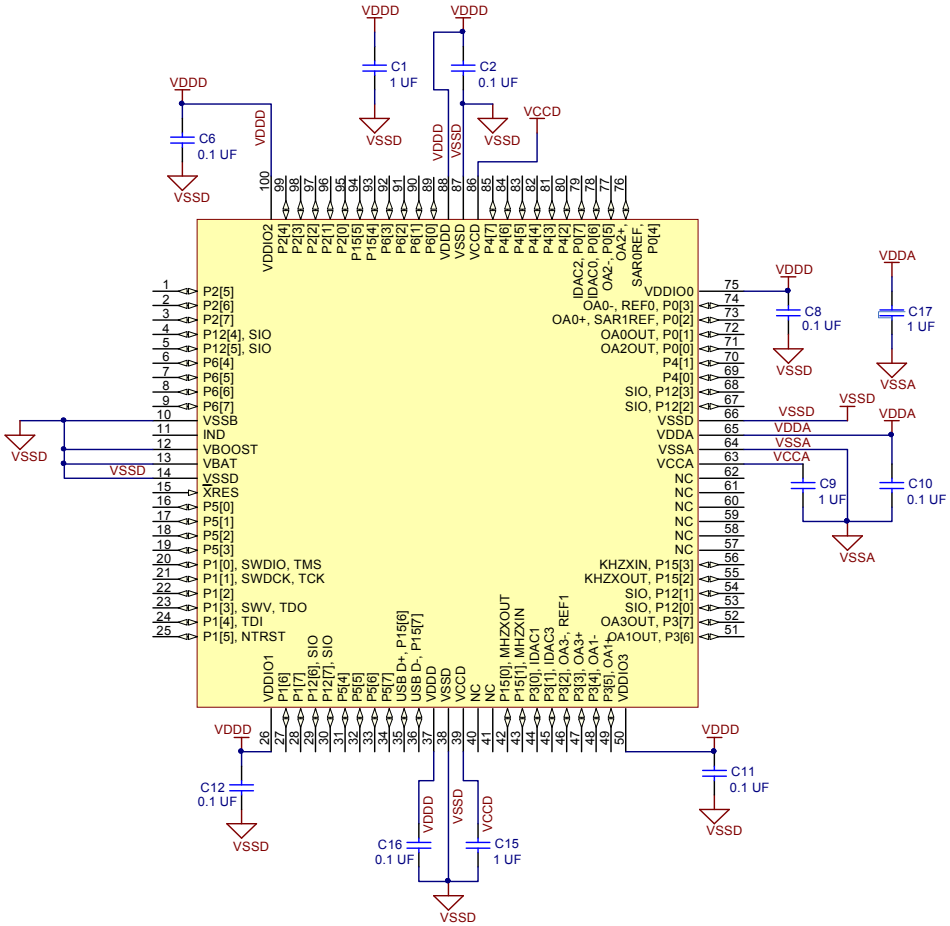

Note The two VCCD pins must be connected together with as short a trace as possible. A trace under the device is recommended, as shown in Figure 2-6.

Figure 2-6. Example PCB Layout for 100-pin TQFP Part for Optimal Analog Performance

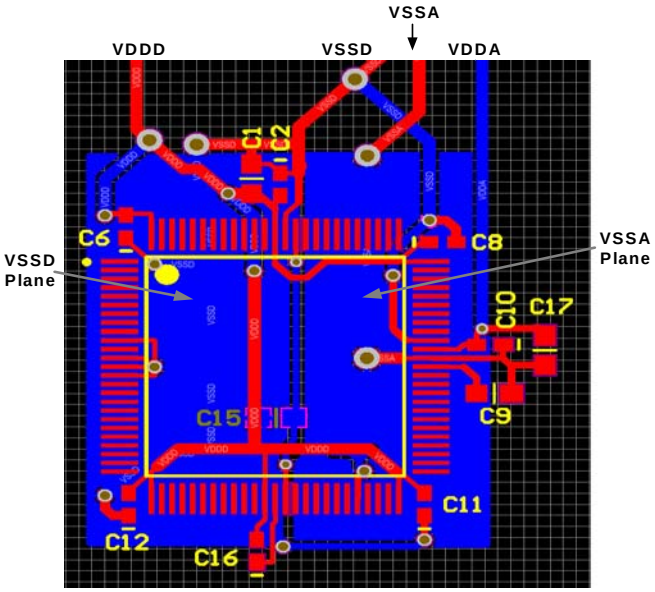

3. Pin Descriptions

IDAC0, IDAC1, IDAC2, IDAC3

Low resistance output pin for high current DACs (IDAC).

Opamp0out, Opamp1out, Opamp2out, Opamp3out

High current output of uncommitted opamp[8].

Extref0, Extref1

External reference input to the analog system.

SAR0 EXTREF, SAR1 EXTREF

External references for SAR ADCs

Opamp0–, Opamp1–, Opamp2–, Opamp3–

Inverting input to uncommitted opamp.

Opamp0+, Opamp1+, Opamp2+, Opamp3+

Noninverting input to uncommitted opamp.

GPIO

General purpose I/O pin provides interfaces to the CPU, digital peripherals, analog peripherals, interrupts, LCD segment drive, and CapSense[8].

I2C0: SCL, I2C1: SCL

I^2C SCL line providing wake from sleep on an address match. Any I/O pin can be used for I^2C SCL if wake from sleep is not required.

I2C0: SDA, I2C1: SDA

I^2C SDA line providing wake from sleep on an address match. Any I/O pin can be used for I^2C SDA if wake from sleep is not required.

Ind

Inductor connection to boost pump.

kHz XTAL: Xo, kHz XTAL: Xi

32.768-kHz crystal oscillator pin.

MHz XTAL: Xo, MHz XTAL: Xi

4 to 25 MHz crystal oscillator pin.

nTRST

Optional JTAG Test Reset programming and debug port connection to reset the JTAG connection.

SIO. Special I/O provides interfaces to the CPU, digital peripherals and interrupts with a programmable high threshold voltage, analog comparator, high sink current, and high impedance state when the device is unpowered.

SWDCK

Serial Wire Debug Clock programming and debug port connection.

SWDIO

Serial Wire Debug Input and Output programming and debug port connection.

TCK

JTAG Test Clock programming and debug port connection.

TDI

JTAG Test Data In programming and debug port connection.

TDO

JTAG Test Data Out programming and debug port connection.

TMS

JTAG Test Mode Select programming and debug port connection.

TRACECLK

Cortex-M3 TRACEPORT connection, clocks TRACEDATA pins.

TRACEDATA[3:0].

Cortex-M3 TRACEPORT connections, output data.

SWV.

Single Wire Viewer output.

USBIO, D+

Provides D+ connection directly to a USB 2.0 bus. May be used as a digital I/O pin; it is powered from VDDD instead of from a VDDIO. Pins are Do Not Use (DNU) on devices without USB.

USBIO, D–

Provides D– connection directly to a USB 2.0 bus. May be used as a digital I/O pin; it is powered from VDDD instead of from a VDDIO. Pins are Do Not Use (DNU) on devices without USB.

VBOOST

Power sense connection to boost pump.

VBAT

Battery supply to boost pump.

VCCA

Output of the analog core regulator or the input to the analog core. Requires a 1uF capacitor to VSSA. The regulator output is not designed to drive external circuits. **Note that if you use the device with an external core regulator (externally regulated mode), the voltage applied to this pin must not exceed the allowable range of 1.71 V to 1.89 V.** When using the internal core regulator, (internally regulated mode, the default), do not tie any power to this pin. For details see Power System on page 24.

VCCD.

Output of the digital core regulator or the input to the digital core. The two VCCD pins must be shorted together, with the trace between them as short as possible, and a 1uF capacitor to VSSD. The regulator output is not designed to drive external circuits. **Note that if you use the device with an external core regulator (externally regulated mode), the voltage applied to this pin must not exceed the allowable range of 1.71 V to 1.89 V.** When using the internal core regulator (internally regulated mode, the default), do not tie any power to this pin. For details see Power System on page 24.

VDDA

Supply for all analog peripherals and analog core regulator. **VDDA must be the highest voltage present on the device. All other supply pins must be less than or equal to VDDA.**

VDDD

Supply for all digital peripherals and digital core regulator. VDDD must be less than or equal to VDDA.

VSSA

Ground for all analog peripherals.

VSSB

Ground connection for boost pump.

VSSD

Ground for all digital logic and I/O pins.

Note

8. GPIOs with opamp outputs are not recommended for use with CapSense.

VDDIO0, VDDIO1, VDDIO2, VDDIO3

Supply for I/O pins. Each VDDIO must be tied to a valid operating voltage (1.71 V to 5.5 V), and must be less than or equal to VDDA.

$\overline{\text{XRES}}$ (and configurable $\overline{\text{XRES}}$)

External reset pin. Active low with internal pull-up. Pin P1[2] may be configured to be a XRES pin; see "Nonvolatile Latches (NVLs)" on page 17.

4. CPU

4.1 ARM Cortex-M3 CPU

The CY8C56LP family of devices has an ARM Cortex-M3 CPU core. The Cortex-M3 is a low power 32-bit three-stage pipelined Harvard architecture CPU that delivers 1.25 DMIPS/MHz. It is intended for deeply embedded applications that require fast interrupt handling features.

Figure 4-1. ARM Cortex-M3 Block Diagram

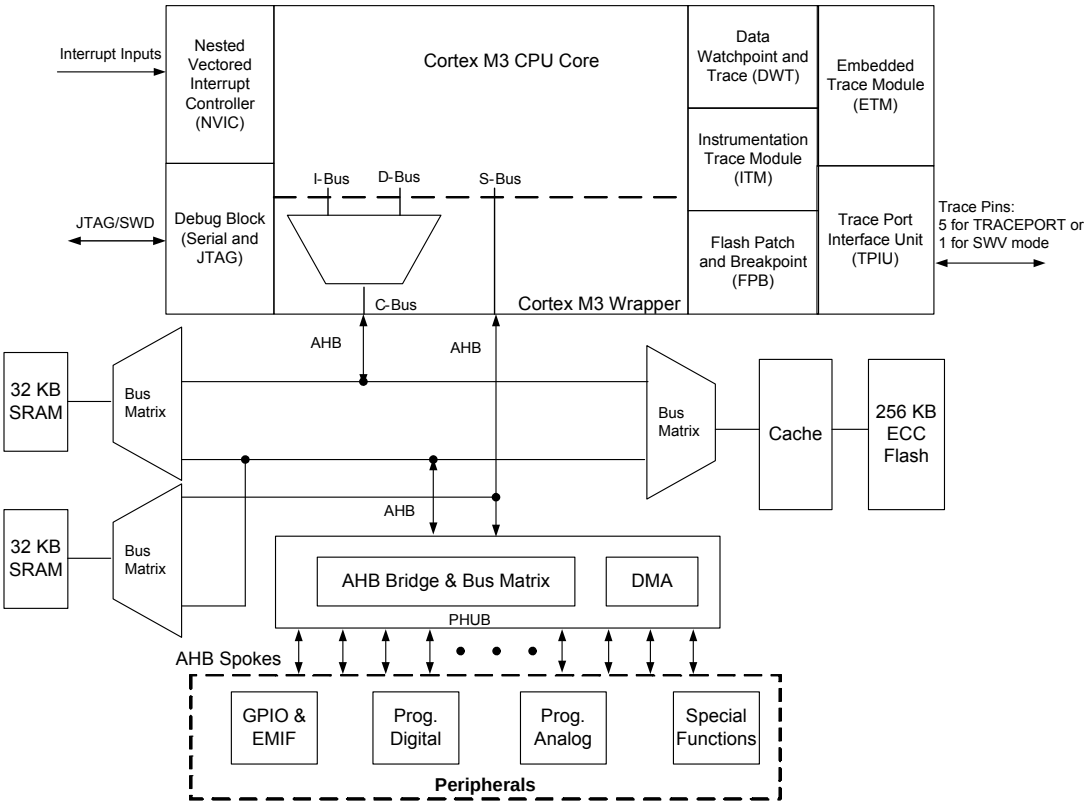

The Cortex-M3 CPU subsystem includes these features:

- ARM Cortex-M3 CPU
- Programmable Nested Vectored Interrupt Controller (NVIC), tightly integrated with the CPU core
- Full featured debug and trace modules, tightly integrated with the CPU core
- Up to 256 KB of flash memory, 2 KB of EEPROM, and 64 KB of SRAM
- Cache controller
- Peripheral HUB (PHUB)
- DMA controller
- External Memory Interface (EMIF)

4.1.1 Cortex-M3 Features

The Cortex-M3 CPU features include:

- 4 GB address space. Predefined address regions for code, data, and peripherals. Multiple buses for efficient and simultaneous accesses of instructions, data, and peripherals.
- The Thumb®-2 instruction set, which offers ARM-level performance at Thumb-level code density. This includes 16-bit and 32-bit instructions. Advanced instructions include:
  - Bit-field control
  - Hardware multiply and divide
  - Saturation
  - If-Then
  - Wait for events and interrupts
  - Exclusive access and barrier
  - Special register access

  The Cortex-M3 does not support ARM instructions.

- Bit-band support for the SRAM region. Atomic bit-level write and read operations for SRAM addresses.
- Unaligned data storage and access. Contiguous storage of data of different byte lengths.
- Operation at two privilege levels (privileged and user) and in two modes (thread and handler). Some instructions can only be executed at the privileged level. There are also two stack pointers: Main (MSP) and Process (PSP). These features support a multitasking operating system running one or more user-level processes.
- Extensive interrupt and system exception support.

4.1.2 Cortex-M3 Operating Modes

The Cortex-M3 operates at either the privileged level or the user level, and in either the thread mode or the handler mode. Because the handler mode is only enabled at the privileged level, there are actually only three states, as shown in Table 4-1.

Table 4-1. Operational Level

Condition	Privileged	User
Running an exception	Handler mode	Not used
Running main program	Thread mode	Thread mode

At the user level, access to certain instructions, special registers, configuration registers, and debugging components is blocked. Attempts to access them cause a fault exception. At the privileged level, access to all instructions and registers is allowed.

The processor runs in the handler mode (always at the privileged level) when handling an exception, and in the thread mode when not.

4.1.3 CPU Registers

The Cortex-M3 CPU registers are listed in Table 4-2. Registers R0-R15 are all 32 bits wide.

Table 4-2. Cortex M3 CPU Registers

Register	Description
R0-R12	General purpose registers R0-R12 have no special architecturally defined uses. Most instructions that specify a general purpose register specify R0-R12. ■ Low Registers: Registers R0-R7 are accessible by all instructions that specify a general purpose register. ■ High Registers: Registers R8-R12 are accessible by all 32-bit instructions that specify a general purpose register; they are not accessible by all 16-bit instructions.
R13	R13 is the stack pointer register. It is a banked register that switches between two 32-bit stack pointers: the Main Stack Pointer (MSP) and the Process Stack Pointer (PSP). The PSP is used only when the CPU operates at the user level in thread mode. The MSP is used in all other privilege levels and modes. Bits[0:1] of the SP are ignored and considered to be 0, so the SP is always aligned to a word (4 byte) boundary.

Table 4-2. Cortex M3 CPU Registers (continued)

Register	Description
R14	R14 is the Link Register (LR). The LR stores the return address when a subroutine is called.
R15	R15 is the Program Counter (PC). Bit 0 of the PC is ignored and considered to be 0, so instructions are always aligned to a half word (2 byte) boundary.
xPSR	The Program status registers are divided into three status registers, which are accessed either together or separately: ■ Application Program Status Register (APSR) holds program execution status bits such as zero, carry, negative, in bits[27:31]. ■ Interrupt Program Status Register (IPSR) holds the current exception number in bits[0:8]. ■ Execution Program Status Register (EPSR) holds control bits for interrupt continuable and IF-THEN instructions in bits[10:15] and [25:26]. Bit 24 is always set to 1 to indicate Thumb mode. Trying to clear it causes a fault exception.
PRIMASK	A 1-bit interrupt mask register. When set, it allows only the nonmaskable interrupt (NMI) and hard fault exception. All other exceptions and interrupts are masked.
FAULTMASK	A 1-bit interrupt mask register. When set, it allows only the NMI. All other exceptions and interrupts are masked.
BASEPRI	A register of up to nine bits that define the masking priority level. When set, it disables all interrupts of the same or higher priority value. If set to 0 then the masking function is disabled.
CONTROL	A 2-bit register for controlling the operating mode. Bit 0: 0 = privileged level in thread mode, 1 = user level in thread mode. Bit 1: 0 = default stack (MSP) is used, 1 = alternate stack is used. If in thread mode or user level then the alternate stack is the PSP. There is no alternate stack for handler mode; the bit must be 0 while in handler mode.

4.2 Cache Controller

The CY8C56LP family has 1 KB instruction cache between the CPU and the flash memory. This improves instruction execution rate and reduces system power consumption by requiring less frequent flash access.

4.3 DMA and PHUB

The PHUB and the DMA controller are responsible for data transfer between the CPU and peripherals, and also data transfers between peripherals. The PHUB and DMA also control device configuration during boot. The PHUB consists of:

- A central hub that includes the DMA controller, arbiter, and router
- Multiple spokes that radiate outward from the hub to most peripherals

There are two PHUB masters: the CPU and the DMA controller. Both masters may initiate transactions on the bus. The DMA channels can handle peripheral communication without CPU intervention. The arbiter in the central hub determines which DMA channel is the highest priority if there are multiple requests.

4.3.1 PHUB Features

- CPU and DMA controller are both bus masters to the PHUB
- Eight multi-layer AHB bus parallel access paths (spokes) for peripheral access
- Simultaneous CPU and DMA access to peripherals located on different spokes
- Simultaneous DMA source and destination burst transactions on different spokes
- Supports 8, 16, 24, and 32-bit addressing and data

Table 4-3. PHUB Spokes and Peripherals

PHUB Spokes	Peripherals
0	SRAM
1	IOs, PICU, EMIF
2	PHUB local configuration, Power manager, Clocks, IC, SWV, EEPROM, Flash programming interface
3	Analog interface and trim, Decimator
4	USB, I^2C, CAN, Timers, Counters, and PWMs
5	DFB
6	UDBs group 1
7	UDBs group 2

4.3.2 DMA Features

- 24 DMA channels
- Each channel has one or more Transaction Descriptors (TDs) to configure channel behavior. Up to 128 total TDs can be defined
- TDs can be dynamically updated
- Eight levels of priority per channel
- Any digitally routable signal, the CPU, or another DMA channel, can trigger a transaction
- Each channel can generate up to two interrupts per transfer
- Transactions can be stalled or canceled
- Supports transaction size of infinite or 1 to 64k bytes
- Large transactions may be broken into smaller bursts of 1 to 127 bytes
- TDs may be nested and/or chained for complex transactions

4.3.3 Priority Levels

The CPU always has higher priority than the DMA controller when their accesses require the same bus resources. Due to the system architecture, the CPU can never starve the DMA. DMA channels of higher priority (lower priority number) may interrupt current DMA transfers. In the case of an interrupt, the current transfer is allowed to complete its current transaction. To ensure latency limits when multiple DMA accesses are requested simultaneously, a fairness algorithm guarantees an interleaved minimum percentage of bus bandwidth for priority levels 2 through 7. Priority levels 0 and 1 do not take part in the fairness algorithm and may use 100% of the bus bandwidth. If a tie occurs on two DMA requests of the same priority level, a simple round robin method is used to evenly share the allocated bandwidth. The round robin allocation can be disabled for each DMA channel, allowing it to always be at the head of the line. Priority levels 2 to 7 are guaranteed the minimum bus bandwidth shown in Table 4-4 after the CPU and DMA priority levels 0 and 1 have satisfied their requirements.

Table 4-4. Priority Levels

Priority Level	% Bus Bandwidth
0	100.0
1	100.0
2	50.0
3	25.0
4	12.5
5	6.2
6	3.1
7	1.5

When the fairness algorithm is disabled, DMA access is granted based solely on the priority level; no bus bandwidth guarantees are made.

4.3.4 Transaction Modes Supported

The flexible configuration of each DMA channel and the ability to chain multiple channels allow the creation of both simple and complex use cases. General use cases include, but are not limited to:

4.3.4.1 Simple DMA

In a simple DMA case, a single TD transfers data between a source and sink (peripherals or memory location). The basic timing diagrams of DMA read and write cycles are shown in Figure 4-2. For more description on other transfer modes, refer to the Technical Reference Manual.

Figure 4-2. DMA Timing Diagram

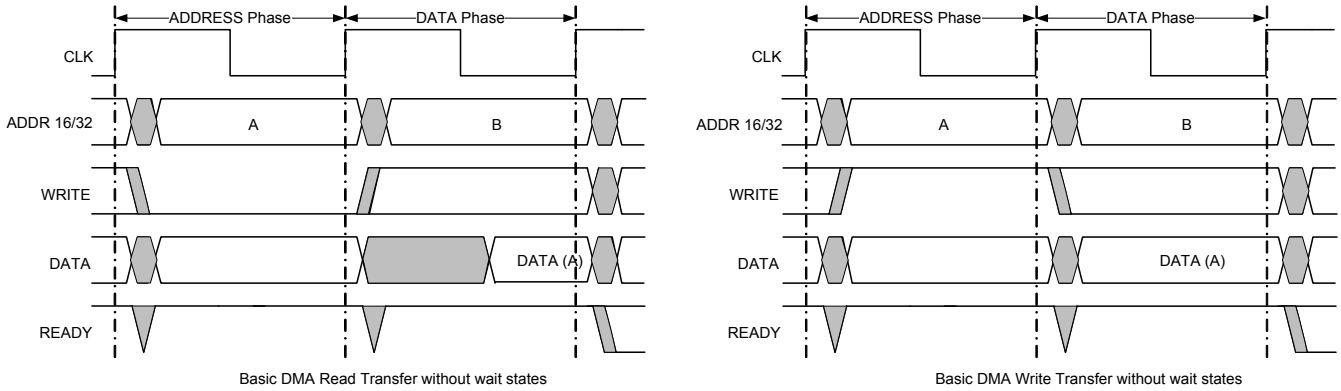

4.3.4.2 Auto Repeat DMA

Auto repeat DMA is typically used when a static pattern is repetitively read from system memory and written to a peripheral. This is done with a single TD that chains to itself.

4.3.4.3 Ping Pong DMA

A ping pong DMA case uses double buffering to allow one buffer to be filled by one client while another client is consuming the data previously received in the other buffer. In its simplest form, this is done by chaining two TDs together so that each TD calls the opposite TD when complete.

4.3.4.4 Circular DMA

Circular DMA is similar to ping pong DMA except it contains more than two buffers. In this case there are multiple TDs; after the last TD is complete it chains back to the first TD.

4.3.4.5 Indexed DMA

In an indexed DMA case, an external master requires access to locations on the system bus as if those locations were shared memory. As an example, a peripheral may be configured as an SPI or I^2C slave where an address is received by the external master. That address becomes an index or offset into the internal system bus memory space. This is accomplished with an initial “address fetch” TD that reads the target address location from the peripheral and writes that value into a subsequent TD in the chain. This modifies the TD chain on the fly. When the “address fetch” TD completes it moves on to the next TD, which has the new address information embedded in it. This TD then carries out the data transfer with the address location required by the external master.

4.3.4.6 Scatter Gather DMA

In the case of scatter gather DMA, there are multiple noncontiguous sources or destinations that are required to effectively carry out an overall DMA transaction. For example, a packet may need to be transmitted off of the device and the packet elements, including the header, payload, and trailer, exist in various noncontiguous locations in memory. Scatter gather DMA allows the segments to be concatenated together by using multiple TDs in a chain. The chain gathers the data from the multiple locations. A similar concept applies for the reception of data onto the device. Certain parts of the received data may need to be scattered to various locations in memory for software processing convenience. Each TD in the chain specifies the location for each discrete element in the chain.

4.3.4.7 Packet Queuing DMA

Packet queuing DMA is similar to scatter gather DMA but specifically refers to packet protocols. With these protocols, there may be separate configuration, data, and status phases associated with sending or receiving a packet.

For instance, to transmit a packet, a memory mapped configuration register can be written inside a peripheral, specifying the overall length of the ensuing data phase. The CPU can set up this configuration information anywhere in system memory and copy it with a simple TD to the peripheral. After the configuration phase, a data phase TD (or a series of data phase TDs) can begin (potentially using scatter gather). When the data phase TD(s) finish, a status phase TD can be invoked that reads some memory mapped status information from the peripheral and copies it to a location in system memory specified by the CPU for later inspection. Multiple sets of configuration, data, and status phase “subchains” can be strung together to create larger chains that transmit multiple packets in this way. A similar concept exists in the opposite direction to receive the packets.

4.3.4.8 Nested DMA

One TD may modify another TD, as the TD configuration space is memory mapped similar to any other peripheral. For example, a first TD loads a second TD’s configuration and then calls the second TD. The second TD moves data as required by the application. When complete, the second TD calls the first TD, which again updates the second TD’s configuration. This process repeats as often as necessary.

4.4 Interrupt Controller

The Cortex-M3 NVIC supports 16 system exceptions and 32 interrupts from peripherals, as shown in Table 4-5.

Table 4-5. Cortex-M3 Exceptions and Interrupts

Exception Number	Exception Type	Priority	Exception Table Address Offset	Function
			0x00	Starting value of R13 / MSP
1	Reset	–3 (highest)	0x04	Reset
2	NMI	–2	0x08	Non maskable interrupt
3	Hard fault	–1	0x0C	All classes of fault, when the corresponding fault handler cannot be activated because it is currently disabled or masked
4	MemManage	Programmable	0x10	Memory management fault, for example, instruction fetch from a nonexecutable region
5	Bus fault	Programmable	0x14	Error response received from the bus system; caused by an instruction prefetch abort or data access error
6	Usage fault	Programmable	0x18	Typically caused by invalid instructions or trying to switch to ARM mode
7 – 10	–	–	0x1C – 0x28	Reserved
11	SVC	Programmable	0x2C	System service call via SVC instruction
12	Debug monitor	Programmable	0x30	Debug monitor
13	–	–	0x34	Reserved
14	PendSV	Programmable	0x38	Deferred request for system service
15	SYSTICK	Programmable	0x3C	System tick timer
16 – 47	IRQ	Programmable	0x40 – 0x3FC	Peripheral interrupt request #0 – #31

Bit 0 of each exception vector indicates whether the exception is executed using ARM or Thumb instructions. Because the Cortex-M3 only supports Thumb instructions, this bit must always be 1. The Cortex-M3 non maskable interrupt (NMI) input can be routed to any pin, via the DSI, or disconnected from all pins. See "DSI Routing Interface Description" section on page 41.

The Nested Vectored Interrupt Controller (NVIC) handles interrupts from the peripherals, and passes the interrupt vectors to the CPU. It is closely integrated with the CPU for low latency interrupt handling. Features include:

- 32 interrupts. Multiple sources for each interrupt.
- Configurable number of priority levels: from 3 to 8.
- Dynamic reprioritization of interrupts.
- Priority grouping. This allows selection of preempting and non preempting interrupt levels.
- Support for tail-chaining, and late arrival, of interrupts. This enables back-to-back interrupt processing without the overhead of state saving and restoration between interrupts.
- Processor state automatically saved on interrupt entry, and restored on interrupt exit, with no instruction overhead.

If the same priority level is assigned to two or more interrupts, the interrupt with the lower vector number is executed first. Each interrupt vector may choose from three interrupt sources: Fixed Function, DMA, and UDB. The fixed function interrupts are direct connections to the most common interrupt sources and provide the lowest resource cost connection. The DMA interrupt sources provide direct connections to the two DMA interrupt sources provided per DMA channel. The third interrupt source for vectors is from the UDB digital routing array. This allows any digital signal available to the UDB array to be used as an interrupt source. All interrupt sources may be routed to any interrupt vector using the UDB interrupt source connections.

Table 4-6. Interrupt Vector Table

Interrupt #	Cortex-M3 Exception #	Fixed Function	DMA	UDB
0	16	Low voltage detect (LVD)	phub_termout0[0]	udb_intr[0]
1	17	Cache/ECC	phub_termout0[1]	udb_intr[1]
2	18	Reserved	phub_termout0[2]	udb_intr[2]
3	19	Sleep (Pwr Mgr)	phub_termout0[3]	udb_intr[3]
4	20	PICU[0]	phub_termout0[4]	udb_intr[4]
5	21	PICU[1]	phub_termout0[5]	udb_intr[5]
6	22	PICU[2]	phub_termout0[6]	udb_intr[6]
7	23	PICU[3]	phub_termout0[7]	udb_intr[7]
8	24	PICU[4]	phub_termout0[8]	udb_intr[8]
9	25	PICU[5]	phub_termout0[9]	udb_intr[9]
10	26	PICU[6]	phub_termout0[10]	udb_intr[10]
11	27	PICU[12]	phub_termout0[11]	udb_intr[11]
12	28	PICU[15]	phub_termout0[12]	udb_intr[12]
13	29	Comparators Combined	phub_termout0[13]	udb_intr[13]
14	30	Switched Caps Combined	phub_termout0[14]	udb_intr[14]
15	31	I^2C	phub_termout0[15]	udb_intr[15]
16	32	CAN	phub_termout1[0]	udb_intr[16]
17	33	Timer/Counter0	phub_termout1[1]	udb_intr[17]
18	34	Timer/Counter1	phub_termout1[2]	udb_intr[18]
19	35	Timer/Counter2	phub_termout1[3]	udb_intr[19]
20	36	Timer/Counter3	phub_termout1[4]	udb_intr[20]
21	37	USB SOF Int	phub_termout1[5]	udb_intr[21]
22	38	USB Arb Int	phub_termout1[6]	udb_intr[22]
23	39	USB Bus Int	phub_termout1[7]	udb_intr[23]
24	40	USB Endpoint[0]	phub_termout1[8]	udb_intr[24]
25	41	USB Endpoint Data	phub_termout1[9]	udb_intr[25]
26	42	Reserved	phub_termout1[10]	udb_intr[26]
27	43	LCD	phub_termout1[11]	udb_intr[27]
28	44	DFB Int	phub_termout1[12]	udb_intr[28]
29	45	Decimator Int	phub_termout1[13]	udb_intr[29]
30	46	phub_err_int	phub_termout1[14]	udb_intr[30]
31	47	eeprom_fault_int	phub_termout1[15]	udb_intr[31]

5. Memory

5.1 Static RAM

CY8C56LP Static RAM (SRAM) is used for temporary data storage. Code can be executed at full speed from the portion of SRAM that is located in the code space. This process is slower from SRAM above 0x20000000. The device provides up to 64 KB of SRAM. The CPU or the DMA controller can access all of SRAM. The SRAM can be accessed simultaneously by the Cortex-M3 CPU and the DMA controller if accessing different 32 KB blocks.

5.2 Flash Program Memory

Flash memory in PSoC devices provides nonvolatile storage for user firmware, user configuration data, bulk data storage, and optional ECC data. The main flash memory area contains up to 256 KB of user program space.

Up to an additional 32 KB of flash space is available for Error Correcting Codes (ECC). If ECC is not used this space can store device configuration data and bulk user data. User code may not be run out of the ECC flash memory section. ECC can correct one bit error and detect two bit errors per 8 bytes of firmware memory; an interrupt can be generated when an error is detected. The flash output is 9 bytes wide with 8 bytes of data and 1 byte of ECC data.

The CPU or DMA controller read both user code and bulk data located in flash through the cache controller. This provides higher CPU performance. If ECC is enabled, the cache controller also performs error checking and correction.

Flash programming is performed through a special interface and preempts code execution out of flash. Code execution may be done out of SRAM during flash programming.

The flash programming interface performs flash erasing, programming and setting code protection levels. Flash in-system serial programming (ISSP), typically used for production programming, is possible through both the SWD and JTAG interfaces. In-system programming, typically used for bootloaders, is also possible using serial interfaces such as I^2C, USB, UART, and SPI, or any communications protocol.

5.3 Flash Security

All PSoC devices include a flexible flash protection model that prevents access and visibility to on-chip flash memory. This prevents duplication or reverse engineering of proprietary code. Flash memory is organized in blocks, where each block contains 256 bytes of program or data and 32 bytes of ECC or configuration data.

The device offers the ability to assign one of four protection levels to each row of flash. Table 5-1 lists the protection modes available. Flash protection levels can only be changed by performing a complete flash erase. The Full Protection and Field Upgrade settings disable external access (through a debugging tool such as PSoC Creator, for example). If your application requires code update through a boot loader, then use the Field Upgrade setting. Use the Unprotected setting only when no security is needed in your application. The PSoC device also offers an advanced security feature called Device Security which permanently disables all test, programming, and debug ports, protecting your application from external access (see the "Device Security" section on page 60). For more information on how to take full advantage of the security features in PSoC, see the PSoC 5 TRM.

Table 5-1. Flash Protection

Protection Setting	Allowed	Not Allowed
Unprotected	External read and write + internal read and write	–
Factory Upgrade	External write + internal read and write	External read
Field Upgrade	Internal read and write	External read and write
Full Protection	Internal read	External read and write + internal write

Disclaimer

Note the following details of the flash code protection features on Cypress devices.

Cypress products meet the specifications contained in their particular Cypress datasheets. Cypress believes that its family of products is one of the most secure families of its kind on the market today, regardless of how they are used. There may be methods, unknown to Cypress, that can breach the code protection features. Any of these methods, to our knowledge, would be dishonest and possibly illegal. Neither Cypress nor any other semiconductor manufacturer can guarantee the security of their code. Code protection does not mean that we are guaranteeing the product as "unbreakable."

Cypress is willing to work with the customer who is concerned about the integrity of their code. Code protection is constantly evolving. We at Cypress are committed to continuously improving the code protection features of our products.

5.4 EEPROM

PSoC EEPROM memory is a byte addressable nonvolatile memory. The CY8C56LP has 2 KB of EEPROM memory to store user data. Reads from EEPROM are random access at the byte level. Reads are done directly; writes are done by sending write commands to an EEPROM programming interface. CPU code execution can continue from flash during EEPROM writes. EEPROM is erasable and writeable at the row level. The EEPROM is divided into 128 rows of 16 bytes each. The CPU can not execute out of EEPROM. There is no ECC hardware associated with EEPROM. If ECC is required it must be handled in firmware.

5.5 Nonvolatile Latches (NVLs)

PSoC has a 4-byte array of nonvolatile latches (NVLs) that are used to configure the device at reset. The NVL register map is shown in Table 5-3.

Table 5-2. Device Configuration NVL Register Map

Register Address	7	6	5	4	3	2	1	0
0x00	PRT3RDM[1:0]		PRT2RDM[1:0]		PRT1RDM[1:0]		PRT0RDM[1:0]	
0x01	PRT12RDM[1:0]		PRT6RDM[1:0]		PRT5RDM[1:0]		PRT4RDM[1:0]	
0x02	XRESMEN						PRT15RDM[1:0]	
0x03	DIG_PHS_DLY[3:0]				ECCEN	DPS[1:0]		CFGSPEED

The details for individual fields and their factory default settings are shown in Table 5-3:.

Table 5-3. Fields and Factory Default Settings

Field	Description	Settings
PRTxRDM[1:0]	Controls reset drive mode of the corresponding I/O port. See "Reset Configuration" on page 34. All pins of the port are set to the same mode.	00b (default) - high impedance analog 01b - high impedance digital 10b - resistive pull up 11b - resistive pull down
XRESMEN	Controls whether pin P1[2] is used as a GPIO or as an external reset. See "Pin Descriptions" on page 9, XRES description.	0 (default) - GPIO 1 - external reset
CFGSPEED	Controls the speed of the IMO-based clock during the device boot process, for faster boot or low-power operation	0 (default) - 12 MHz IMO 1 - 48 MHz IMO
DPS{1:0]	Controls the usage of various P1 pins as a debug port. See "Programming, Debug Interfaces, Resources" on page 57.	00b - 5-wire JTAG 01b (default) - 4-wire JTAG 10b - SWD 11b - debug ports disabled
ECCEN	Controls whether ECC flash is used for ECC or for general configuration and data storage. See "Flash Program Memory" on page 16.	0 (default) - ECC disabled 1 - ECC enabled
DIG_PHS_DLY[3:0]	Selects the digital clock phase delay.	See the TRM for details.

Although PSoC Creator provides support for modifying the device configuration NVLs, the number of NVL erase/write cycles is limited – see "Nonvolatile Latches (NVL)" on page 103.

5.6 External Memory Interface

CY8C56LP provides an External Memory Interface (EMIF) for connecting to external memory devices. The connection allows read and write accesses to external memories. The EMIF operates in conjunction with UDBs, I/O ports, and other hardware to generate external memory address and control signals. At 33 MHz, each memory access cycle takes four bus clock cycles. Figure 5-1 is the EMIF block diagram. The EMIF supports synchronous and asynchronous memories. The CY8C56LP only supports one type of external memory device at a time.

External memory is located in the Cortex-M3 external RAM space; it can use up to 24 address bits. See Table 5-4 on page 19Memory Map on page 19. The memory can be 8 or 16 bits wide. Cortex-M3 instructions can be fetched/executed from external memory, although at a slower rate than from flash. There is no provision for code security in external memory. If code must be kept secure, then it should be placed in internal flash. See Flash Security on page 16 and Device Security on page 60.

Figure 5-1. EMIF Block Diagram

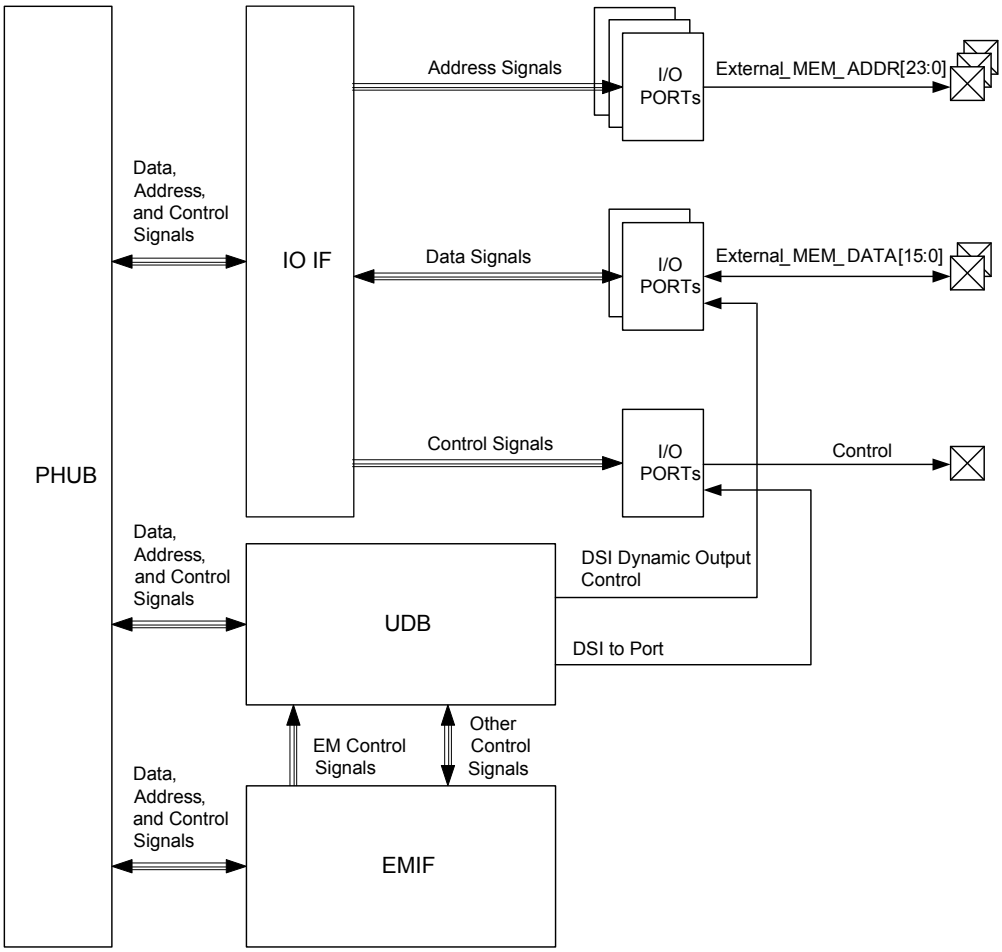

5.7 Memory Map

The Cortex-M3 has a fixed address map, which allows peripherals to be accessed by simple memory access instructions.

5.7.1 Address Map

The 4 GB address space is divided into the ranges shown in Table 5-4:

Table 5-4. Address Map

Address Range	Size	Use
0x00000000 – 0x1FFFFFFF	0.5 GB	Program code. This includes the exception vector table at power up, which starts at address 0.
0x20000000 – 0x3FFFFFFF	0.5 GB	Static RAM. This includes a 1 MByte bit-band region starting at 0x20000000 and a 32 Mbyte bit-band alias region starting at 0x22000000.
0x40000000 – 0x5FFFFFFF	0.5 GB	Peripherals.
0x60000000 – 0x9FFFFFFF	1 GB	External RAM.
0xA0000000 – 0xDFFFFFFF	1 GB	External peripherals.
0xE0000000 – 0xFFFFFFFF	0.5 GB	Internal peripherals, including the NVIC and debug and trace modules.

Table 5-5. Peripheral Data Address Map

Address Range	Purpose
0x00000000 – 0x0003FFFF	256K Flash
0x1FFF8000 – 0x1FFFFFFF	32K SRAM in Code region
0x20000000 – 0x20007FFF	32K SRAM in SRAM region
0x40004000 – 0x400042FF	Clocking, PLLs, and oscillators
0x40004300 – 0x400043FF	Power management
0x40004500 – 0x400045FF	Ports interrupt control
0x40004700 – 0x400047FF	Flash programming interface
0x40004800 – 0x400048FF	Cache controller
0x40004900 – 0x400049FF	I^2C controller
0x40004E00 – 0x40004EFF	Decimator

Table 5-5. Peripheral Data Address Map (continued)

Address Range	Purpose
0x40004F00 – 0x40004FFF	Fixed timer/counter/PWMs
0x40005000 – 0x400051FF	I/O ports control
0x40005400 – 0x400054FF	External Memory Interface (EMIF) control registers
0x40005800 – 0x40005FFF	Analog Subsystem Interface
0x40006000 – 0x400060FF	USB Controller
0x40006400 – 0x40006FFF	UDB Working Registers
0x40007000 – 0x40007FFF	PHUB Configuration
0x40008000 – 0x400087FF	EEPROM
0x4000A000 – 0x4000A400	CAN
0x4000C000 – 0x4000C800	Digital Filter Block
0x40010000 – 0x4001FFFF	Digital Interconnect Configuration
0x48000000 – 0x48007FFF	Flash ECC Bytes
0x60000000 – 0x60FFFFFF	External Memory Interface (EMIF)
0xE0000000 – 0xE00FFFFF	Cortex-M3 PPB Registers, including NVIC, debug, and trace

The bit-band feature allows individual bits in SRAM to be read or written as atomic operations. This is done by reading or writing bit 0 of corresponding words in the bit-band alias region. For example, to set bit 3 in the word at address 0x20000000, write a 1 to address 0x2200000C. To test the value of that bit, read address 0x2200000C and the result is either 0 or 1 depending on the value of the bit.

Most memory accesses done by the Cortex-M3 are aligned, that is, done on word (4-byte) boundary addresses. Unaligned accesses of words and 16-bit half-words on nonword boundary addresses can also be done, although they are less efficient.

5.7.2 Address Map and Cortex-M3 Buses

The ICode and DCode buses are used only for accesses within the Code address range, 0 – 0x1FFFFFFF.

The System bus is used for data accesses and debug accesses within the ranges 0x20000000 – 0xDFFFFFFF and 0xE0100000 – 0xFFFFFFFF. Instruction fetches can also be done within the range 0x20000000 – 0x3FFFFFFF, although these can be slower than instruction fetches via the ICode bus.

The Private Peripheral Bus (PPB) is used within the Cortex-M3 to access system control registers and debug and trace module registers.

6. System Integration

6.1 Clocking System

The clocking system generates, divides, and distributes clocks throughout the PSoC system. For the majority of systems, no external crystal is required. The IMO and PLL together can generate up to a 67 MHz clock, accurate to ±1% over voltage and temperature. Additional internal and external clock sources allow each design to optimize accuracy, power, and cost. All of the system clock sources can be used to generate other clock frequencies in the 16-bit clock dividers and UDBs for anything the user wants, for example a UART baud rate generator.

Clock generation and distribution is automatically configured through the PSoC Creator IDE graphical interface. This is based on the complete system's requirements. It greatly speeds the design process. PSoC Creator allows designers to build clocking systems with minimal input. The designer can specify desired clock frequencies and accuracies, and the software locates or builds a clock that meets the required specifications. This is possible because of the programmability inherent in PSoC.

Key features of the clocking system include:

- Seven general purpose clock sources
  - 3- to 62-MHz IMO, ±1% at 3 MHz
  - 4- to 25-MHz External Crystal Oscillator (MHzECO)
  - Clock doubler provides a doubled clock frequency output for the USB block, see USB Clock Domain on page 23
  - DSI signal from an external I/O pin or other logic
  - 24- to 67-MHz fractional Phase-Locked Loop (PLL) sourced from IMO, MHzECO, or DSI
  - Clock Doubler
  - 1-kHz, 33-kHz, 100-kHz ILO for Watch Dog Timer (WDT) and Sleep Timer
  - 32.768-kHz External Crystal Oscillator (kHzECO) for Real Time Clock (RTC)
- IMO has a USB mode that auto locks to USB bus clock requiring no external crystal for USB. (USB equipped parts only)
- Independently sourced clock in all clock dividers
- Eight 16-bit clock dividers for the digital system
- Four 16-bit clock dividers for the analog system
- Dedicated 16-bit divider for the CPU bus and CPU clock
- Automatic clock configuration in PSoC Creator

Table 6-1. Oscillator Summary

Source	Fmin	Tolerance at Fmin	Fmax	Tolerance at Fmax	Startup Time
IMO	3 MHz	±1% over voltage and temperature	62 MHz	±7%	13 µs max
MHzECO	4 MHz	Crystal dependent	25 MHz	Crystal dependent	5 ms typ, max is crystal dependent
DSI	0 MHz	Input dependent	66 MHz	Input dependent	Input dependent
PLL	24 MHz	Input dependent	67 MHz	Input dependent	250 µs max
Doubler	12 MHz	Input dependent	48 MHz	Input dependent	1 µs max
ILO	1 kHz	–50%, +100%	100 kHz	–55%, +100%	15 ms max in lowest power mode
kHzECO	32 kHz	Crystal dependent	32 kHz	Crystal dependent	500 ms typ, max is crystal dependent

Figure 6-1. Clocking Subsystem

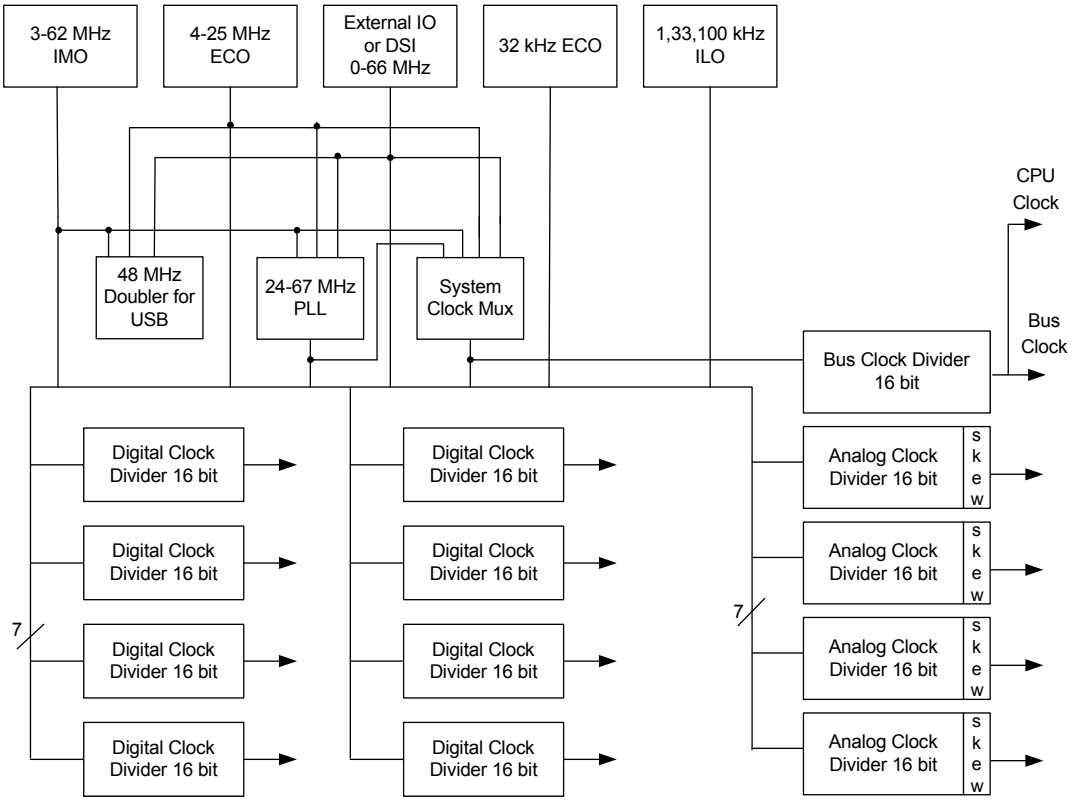

6.1.1 Internal Oscillators

6.1.1.1 Internal Main Oscillator

In most designs the IMO is the only clock source required, due to its ±1% accuracy. The IMO operates with no external components and outputs a stable clock. A factory trim for each frequency range is stored in the device. With the factory trim, tolerance varies from ±1% at 3 MHz, up to ±7% at 62 MHz. The IMO, in conjunction with the PLL, allows generation of CPU and system clocks up to the device's maximum frequency (see Phase-Locked Loop)

The IMO provides clock outputs at 3, 6, 12, 24, 48, and 62 MHz.

6.1.1.2 Clock Doubler

The clock doubler outputs a clock at twice the frequency of the input clock. The doubler works for input frequency ranges of 6 to 24 MHz (providing 12 to 48 MHz at the output). It can be configured to use a clock from the IMO, MHzECO, or the DSI (external pin). The doubler is typically used to clock the USB.

6.1.1.3 Phase-Locked Loop

The PLL allows low frequency, high accuracy clocks to be multiplied to higher frequencies. This is a tradeoff between higher clock frequency and accuracy and, higher power consumption and increased startup time.

The PLL block provides a mechanism for generating clock frequencies based upon a variety of input sources. The PLL outputs clock frequencies in the range of 24 to 67 MHz. Its input and feedback dividers supply 4032 discrete ratios to create almost any desired system clock frequency. The accuracy of the PLL output depends on the accuracy of the PLL input source. The most common PLL use is to multiply the IMO clock at 3 MHz, where it is most accurate, to generate the CPU and system clocks up to the device's maximum frequency.

The PLL achieves phase lock within 250 µs (verified by bit setting). It can be configured to use a clock from the IMO, MHzECO or DSI (external pin). The PLL clock source can be used until lock is complete and signaled with a lock bit. The lock signal can be routed through the DSI to generate an interrupt. Disable the PLL before entering low power modes.

6.1.1.4 Internal Low Speed Oscillator

The ILO provides clock frequencies for low power consumption, including the watchdog timer, and sleep timer. The ILO generates up to three different clocks: 1 kHz, 33 kHz, and 100 kHz.

The 1 kHz clock (CLK1K) is typically used for a background 'heartbeat' timer. This clock inherently lends itself to low power supervisory operations such as the watchdog timer and long sleep intervals using the central timewheel (CTW).

The central timewheel is a 1 kHz, free running, 13-bit counter clocked by the ILO. The central timewheel is always enabled except in hibernate mode and when the CPU is stopped during debug on chip mode. It can be used to generate periodic interrupts for timing purposes or to wake the system from a low power mode. Firmware can reset the central timewheel.

The central timewheel can be programmed to wake the system periodically and optionally issue an interrupt. This enables flexible, periodic wakeups from low power modes or coarse timing applications. Systems that require accurate timing should use Real Time Clock capability instead of the central timewheel.

The 100-kHz clock (CLK100K) can be used as a low power system clock to run the CPU. It can also generate time intervals using the fast timewheel.

The fast timewheel is a 5-bit counter, clocked by the 100-kHz clock. It features programmable settings and automatically resets when the terminal count is reached. An optional interrupt can be generated each time the terminal count is reached. This enables flexible, periodic interrupts of the CPU at a higher rate than is allowed using the central timewheel.

The 33 kHz clock (CLK33K) comes from a divide-by-3 operation on CLK100K. This output can be used as a reduced accuracy version of the 32.768 kHz ECO clock with no need for a crystal.

6.1.2 External Oscillators

6.1.2.1 MHz External Crystal Oscillator

The MHzECO provides high frequency, high precision clocking using an external crystal (see Figure 6-2). It supports a wide variety of crystal types, in the range of 4 to 25 MHz. When used in conjunction with the PLL, it can generate CPU and system clocks up to the device's maximum frequency (see Phase-Locked Loop on page 21). The GPIO pins connecting to the external crystal and capacitors are fixed. MHzECO accuracy depends on the crystal chosen.

Figure 6-2. MHzECO Block Diagram

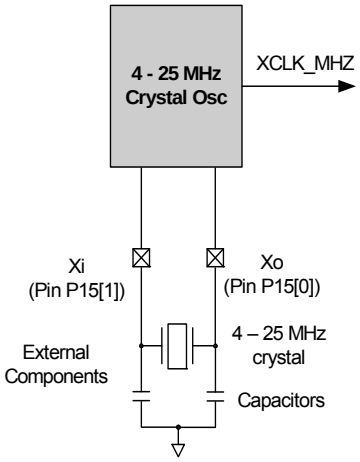

6.1.2.2 32.768 kHz ECO

The 32.768 kHz External Crystal Oscillator (32kHzECO) provides precision timing with minimal power consumption using an external 32.768 kHz watch crystal (see Figure 6-3). The 32kHzECO also connects directly to the sleep timer and provides the source for the Real Time Clock (RTC). The RTC uses a 1 second interrupt to implement the RTC functionality in firmware.

The oscillator works in two distinct power modes. This allows users to trade off power consumption with noise immunity from neighboring circuits. The GPIO pins connected to the external crystal and capacitors are fixed.

Figure 6-3. 32kHzECO Block Diagram

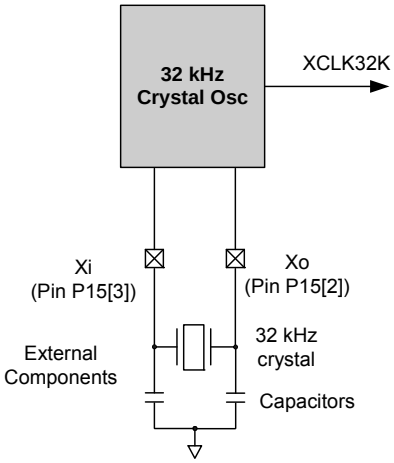

It is recommended that the external 32.768-kHz watch crystal have a load capacitance (CL) of 6 pF or 12.5 pF. Check the crystal manufacturer's datasheet. The two external capacitors, CL1 and CL2, are typically of the same value, and their total capacitance, CL1CL2 / (CL1 + CL2), including pin and trace capacitance, should equal the crystal CL value. For more information, refer to application note AN54439: PSoC 3 and PSoC 5 External Oscillators. See also pin capacitance specifications in the "GPIO" section on page 69.

6.1.2.3 Digital System Interconnect

The DSI provides routing for clocks taken from external clock oscillators connected to I/O. The oscillators can also be generated within the device in the digital system and Universal Digital Blocks.

While the primary DSI clock input provides access to all clocking resources, up to eight other DSI clocks (internally or externally generated) may be routed directly to the eight digital clock dividers. This is only possible if there are multiple precision clock sources.

6.1.3 Clock Distribution

All seven clock sources are inputs to the central clock distribution system. The distribution system is designed to create multiple high precision clocks. These clocks are customized for the design's requirements and eliminate the common problems found with limited resolution prescalers attached to peripherals. The clock distribution system generates several types of clock trees.

- The system clock is used to select and supply the fastest clock in the system for general system clock requirements and clock synchronization of the PSoC device.
- Bus Clock 16-bit divider uses the system clock to generate the system's bus clock used for data transfers and the CPU. The CPU clock is directly derived from the bus clock.
- Eight fully programmable 16-bit clock dividers generate digital system clocks for general use in the digital system, as configured by the design's requirements. Digital system clocks can generate custom clocks derived from any of the seven clock sources for any purpose. Examples include baud rate generators, accurate PWM periods, and timer clocks, and

many others. If more than eight digital clock dividers are required, the Universal Digital Blocks (UDBs) and fixed function Timer/Counter/PWMs can also generate clocks.

- Four 16-bit clock dividers generate clocks for the analog system components that require clocking, such as ADCs and mixers. The analog clock dividers include skew control to ensure that critical analog events do not occur simultaneously with digital switching events. This is done to reduce analog system noise.

Each clock divider consists of an 8-input multiplexer, a 16-bit clock divider (divide by 2 and higher) that generates ~50% duty cycle clocks, system clock resynchronization logic, and deglitch logic. The outputs from each digital clock tree can be routed into the digital system interconnect and then brought back into the clock system as an input, allowing clock chaining of up to 32 bits.

6.1.4 USB Clock Domain

The USB clock domain is unique in that it operates largely asynchronously from the main clock network. The USB logic contains a synchronous bus interface to the chip, while running on an asynchronous clock to process USB data. The USB logic requires a 48 MHz frequency. This frequency can be generated from different sources, including DSI clock at 48 MHz or doubled value of 24 MHz from internal oscillator, DSI signal, or crystal oscillator.

6.2 Power System

The power system consists of separate analog, digital, and I/O supply pins, labeled VDDA, VDDD, and VDDIOX, respectively. It also includes two internal 1.8 V regulators that provide the digital (VCCD) and analog (VCCA) supplies for the internal core logic. The output pins of the regulators (VCCD and VCCA) and the VDDIO pins must have capacitors connected as shown in Figure 6-4. The two VCCD pins must be shorted together, with as short a trace as possible, and connected to a 1 µF ±10% X5R capacitor. The power system also contains a sleep regulator, an I^2C regulator, and a hibernate regulator.

Figure 6-4. PSoC Power System

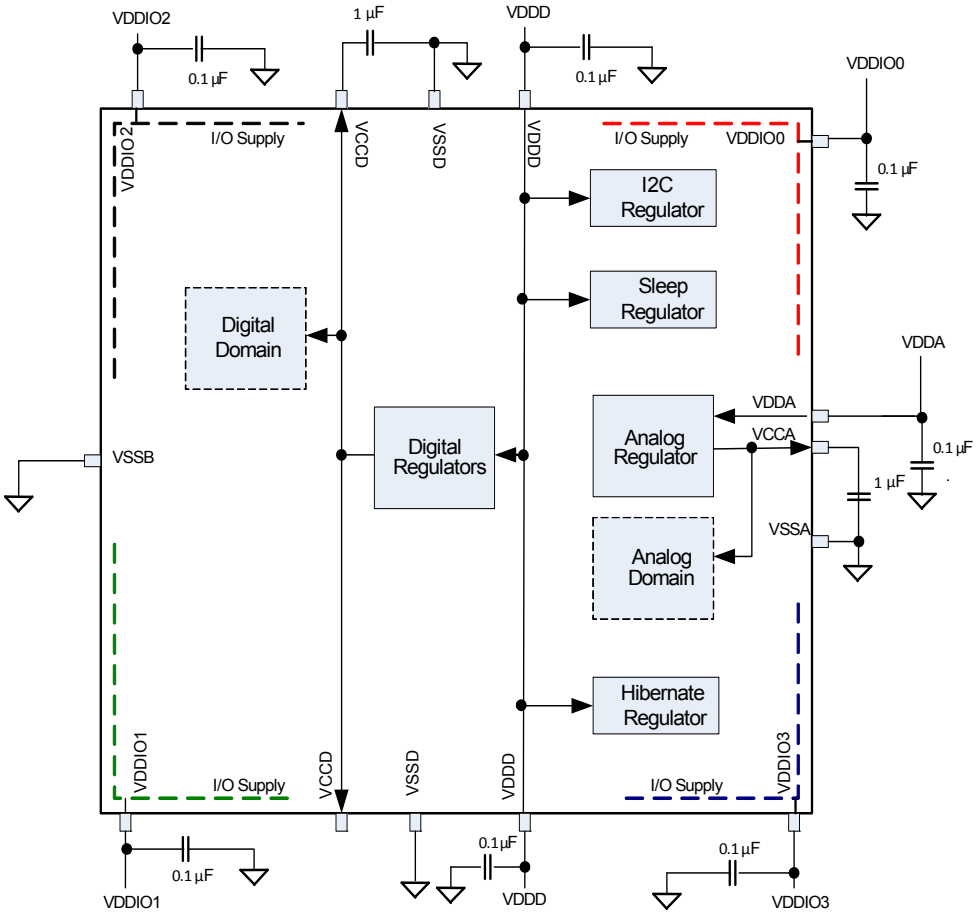

Note The two VCCD pins must be connected together with as short a trace as possible. A trace under the device is recommended, as shown in Figure 2-6 on page 8.

You can power the device in internally regulated mode, where the voltage applied to the V_{DDx} pins is as high as 5.5 V, and the internal regulators provide the core voltages. **In this mode, do not apply power to the V_{CCx} pins, and do not tie the V_{DDx} pins to the V_{CCx} pins.**

You can also power the device in externally regulated mode, that is, by directly powering the V_{CCD} and V_{CCA} pins. In this configuration, the V_{DDD} pins should be shorted to the V_{CCD} pins and the V_{DDA} pin should be shorted to the V_{CCA} pin. The allowed supply range in this configuration is 1.71 V to 1.89 V. After power up in this configuration, the internal regulators are on by default, and should be disabled to reduce power consumption.

6.2.1 Power Modes

PSoC 5LP devices have four different power modes, as shown in Table 6-2 and Table 6-3. The power modes allow a design to easily provide required functionality and processing power while simultaneously minimizing power consumption and maximizing battery life in low power and portable devices.

PSoC 5LP power modes, in order of decreasing power consumption are:

- Active
- Alternate Active
- Sleep
- Hibernate

Active is the main processing mode. Its functionality is configurable. Each power controllable subsystem is enabled or disabled by using separate power configuration template registers. In alternate active mode, fewer subsystems are enabled, reducing power. In sleep mode most resources are disabled regardless of the template settings. Sleep mode is optimized to provide timed sleep intervals and Real Time Clock functionality. The lowest power mode is hibernate, which retains register and SRAM state, but no clocks, and allows wakeup only from I/O pins. Figure 6-5 illustrates the allowable transitions between power modes. Sleep and hibernate modes should not be entered until all VDDIO supplies are at valid voltage levels.

Table 6-2. Power Modes

Power Modes	Description	Entry Condition	Wakeup Source	Active Clocks	Regulator
Active	Primary mode of operation, all peripherals available (programmable)	Wakeup, reset, manual register entry	Any interrupt	Any (programmable)	All regulators available. Digital and analog regulators can be disabled if external regulation used.
Alternate Active	Similar to Active mode, and is typically configured to have fewer peripherals active to reduce power. One possible configuration is to use the UDBs for processing, with the CPU turned off	Manual register entry	Any interrupt	Any (programmable)	All regulators available. Digital and analog regulators can be disabled if external regulation used.
Sleep	All subsystems automatically disabled	Manual register entry	Comparator, PICU, I^2C, RTC, CTW, LVD	ILO/kHzECO	Both digital and analog regulators buzzed. Digital and analog regulators can be disabled if external regulation used.
Hibernate	All subsystems automatically disabled Lowest power consuming mode with all peripherals and internal regulators disabled, except hibernate regulator is enabled Configuration and memory contents retained	Manual register entry	PICU		Only hibernate regulator active.

Table 6-3. Power Modes Wakeup Time and Power Consumption

Sleep Modes	Wakeup Time	Current (Typ)	Code Execution	Digital Resources	Analog Resources	Clock Sources Available	Wakeup Sources	Reset Sources
Active	–	3.1 mA[9]	Yes	All	All	All	–	All
Alternate Active	–	–	User defined	All	All	All	–	All
Sleep	<25 µs	2 µA	No	I^2C	Comparator	ILO/kHzECO	Comparator, PICU, I^2C, RTC, CTW, LVD	XRES, LVD, WDR
Hibernate	<200 µs	300 nA	No	None	None	None	PICU	XRES

Note
9. Bus clock off. Execute from CPU instruction buffer at 6 MHz. See Table 11-2 on page 63.

Figure 6-5. Power Mode Transitions

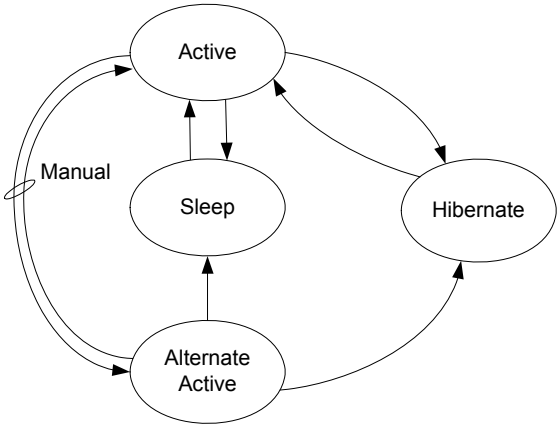

6.2.1.1 Active Mode

Active mode is the primary operating mode of the device. When in active mode, the active configuration template bits control which available resources are enabled or disabled. When a resource is disabled, the digital clocks are gated, analog bias currents are disabled, and leakage currents are reduced as appropriate. User firmware can dynamically control subsystem power by setting and clearing bits in the active configuration template. The CPU can disable itself, in which case the CPU is automatically reenabled at the next wakeup event.

When a wakeup event occurs, the global mode is always returned to active, and the CPU is automatically enabled, regardless of its template settings. Active mode is the default global power mode upon boot.

6.2.1.2 Alternate Active Mode

Alternate Active mode is very similar to Active mode. In alternate active mode, fewer subsystems are enabled, to reduce power consumption. One possible configuration is to turn off the CPU and flash, and run peripherals at full speed.

6.2.1.3 Sleep Mode

Sleep mode reduces power consumption when a resume time of 15 µs is acceptable. The wake time is used to ensure that the regulator outputs are stable enough to directly enter active mode.

6.2.1.4 Hibernate Mode

In hibernate mode nearly all of the internal functions are disabled. Internal voltages are reduced to the minimal level to keep vital systems alive. Configuration state is preserved in hibernate mode and SRAM memory is retained. GPIOs configured as digital outputs maintain their previous values and external GPIO pin interrupt settings are preserved. The device can only return from hibernate mode in response to an external I/O interrupt. The resume time from hibernate mode is less than 100 µs.

To achieve an extremely low current, the hibernate regulator has limited capacity. This limits the frequency of any signal present on the input pins; no GPIO should toggle at a rate greater than 10 kHz while in hibernate mode. If pins must be toggled at a high rate while in a low power mode, use sleep mode instead.

6.2.1.5 Wakeup Events

Wakeup events are configurable and can come from an interrupt or device reset. A wakeup event restores the system to active mode. Firmware enabled interrupt sources include internally generated interrupts, power supervisor, central timewheel, and I/O interrupts. Internal interrupt sources can come from a variety of peripherals, such as analog comparators and UDBs. The central timewheel provides periodic interrupts to allow the system to wake up, poll peripherals, or perform real-time functions. Reset event sources include the external reset I/O pin (XRES), WDT, and Precision Reset (PRES).

6.2.2 Boost Converter

Applications that use a supply voltage of less than 1.71 V, such as single cell battery supplies, may use the on-chip boost converter. The boost converter may also be used in any system that requires a higher operating voltage than the supply provides. For instance, this includes driving 5.0 V LCD glass in a 3.3 V system. The boost converter accepts an input voltage as low as 0.5 V. With one low cost inductor it produces a selectable output voltage sourcing enough current to operate the PSoC and other on-board components.

The boost converter accepts an input voltage VBAT from 0.5 V to 3.6 V, and can start up with VBAT as low as 0.5 V. The converter provides a user configurable output voltage of 1.8 to 5.0 V (VBOOST). VBAT is typically less than VBOOST; if VBAT is greater than or equal to VBOOST, then VBOOST will be the same as VBAT. The block can deliver up to 75 mA (IBOOST) depending on configuration.

Four pins are associated with the boost converter: VBAT, VSSB, VBOOST, and Ind. The boosted output voltage is sensed at the VBOOST pin and must be connected directly to the chip's supply inputs. An inductor is connected between the VBAT and Ind pins. You can optimize the inductor value to increase the boost converter efficiency based on input voltage, output voltage, current and switching frequency.

Figure 6-6. Application for Boost Converter

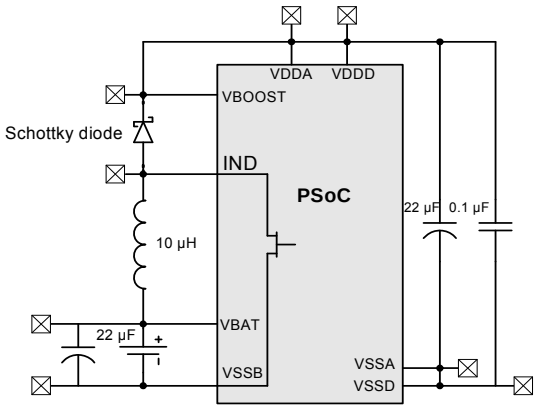

The switching frequency is set to 400 kHz using an oscillator in the boost converter block. The VBOOST is limited to 4 × VBAT.

The boost converter can be operated in two different modes: active and sleep. Active mode is the normal mode of operation where the boost regulator actively generates a regulated output voltage.

The boost typically draws 250 µA in active mode and 25 µA in sleep mode. The boost operating modes must be used in conjunction with chip power modes to minimize total power consumption. Table 6-4 lists the boost power modes available in different chip power modes.

Table 6-4. Chip and Boost Power Modes Compatibility

Chip Power Modes	Boost Power Modes
Chip –Active or alternate active mode	Boost must be operated in its active mode.
Chip –Sleep mode	Boost can be operated in either active or sleep mode. In boost sleep mode, the chip must wake up periodically for boost active-mode refresh.
Chip–Hibernate mode	Boost can be operated in either active or sleep mode. However, it is recommended not to use the boost with chip hibernate mode due to the higher current consumption. In boost sleep mode, the chip must wake up periodically for boost active-mode refresh.

If the boost converter is not used, tie the VBAT, VSSB, and VBOOST pins to ground and leave the Ind pin unconnected.

6.3 Reset

CY8C56LP has multiple internal and external reset sources available. The reset sources are:

- Power source monitoring - The analog and digital power voltages, VDDA, VDDD, VCCA, and VCCD are monitored in several different modes during power up, active mode, and sleep mode (buzzing). If any of the voltages goes outside predetermined ranges then a reset is generated. The monitors are programmable to generate an interrupt to the processor under certain conditions before reaching the reset thresholds.
- External - The device can be reset from an external source by pulling the reset pin (XRES) low. The XRES pin includes an internal pull up to VDDIO1. VDDD, VDDA, and VDDIO1 must all have voltage applied before the part comes out of reset.
- Watchdog timer - A watchdog timer monitors the execution of instructions by the processor. If the watchdog timer is not reset by firmware within a certain period of time, the watchdog timer generates a reset.
- Software - The device can be reset under program control.

Figure 6-7. Resets

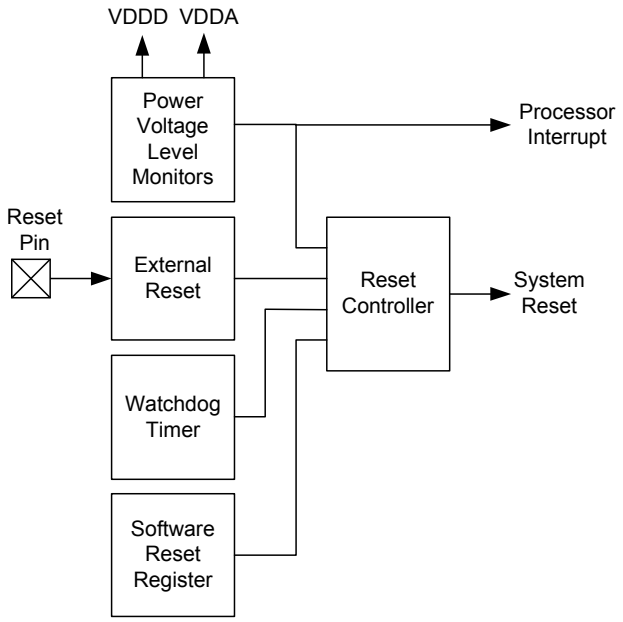

The term **system reset** indicates that the processor as well as analog and digital peripherals and registers are reset.

A reset status register shows some of the resets or power voltage monitoring interrupts. The program may examine this register to detect and report certain exception conditions. This register is cleared after a power-on reset. For details see the Technical Reference Manual.

6.3.1 Reset Sources

6.3.1.1 Power Voltage Level Monitors

- IPOR - Initial Power-on-Reset

  At initial power on, IPOR monitors the power voltages V_{DDD}, V_{DDA}, V_{CCD} and V_{CCA}. The trip level is not precise. It is set to approximately 1 volt, which is below the lowest specified operating voltage but high enough for the internal circuits to be reset and to hold their reset state. The monitor generates a reset pulse that is at least 150 ns wide. It may be much wider if one or more of the voltages ramps up slowly.

  If after the IPOR triggers either V_{DDX} drops back below the trigger point, in a non-monotonic fashion, it must remain below that point for at least 10 µs. The hysteresis of the IPOR trigger point is typically 100 mV.

  After boot, the IPOR circuit is disabled and voltage supervision is handed off to the precise low-voltage reset (PRES) circuit.
- PRES - Precise Low-Voltage Reset

  This circuit monitors the outputs of the analog and digital internal regulators after power up. The regulator outputs are compared to a precise reference voltage. The response to a PRES trip is identical to an IPOR reset.

  In normal operating mode, the program cannot disable the digital PRES circuit. The analog regulator can be disabled, which also disables the analog portion of the PRES. The PRES circuit is disabled automatically during sleep and hibernate modes, with one exception: During sleep mode the regulators are periodically activated (buzzed) to provide supervisory

services and to reduce wakeup time. At these times the PRES circuit is also buzzed to allow periodic voltage monitoring.

After PRES has been deasserted, at least 10 µs must elapse before it can be reasserted.

- ALVI, DLVI, AHVI - Analog/Digital Low Voltage Interrupt, Analog High Voltage Interrupt

  Interrupt circuits are available to detect when VDDA and VDDD go outside a voltage range. For AHVI, VDDA is compared to a fixed trip level. For ALVI and DLVI, VDDA and VDDD are compared to trip levels that are programmable, as listed in Table 6-5. ALVI and DLVI can also be configured to generate a device reset instead of an interrupt.

Table 6-5. Analog/Digital Low Voltage Interrupt, Analog High Voltage Interrupt

Interrupt	Supply	Normal Voltage Range	Available Trip Settings
DLVI	VDDD	1.71 V–5.5 V	1.70 V–5.45 V in 250 mV increments
ALVI	VDDA	1.71 V–5.5 V	1.70 V–5.45 V in 250 mV increments
AHVI	VDDA	1.71 V–5.5 V	5.75 V

The monitors are disabled until after IPOR. During sleep mode these circuits are periodically activated (buzzed). If an interrupt occurs during buzzing then the system first enters its wakeup sequence. The interrupt is then recognized and may be serviced.

The buzz frequency is adjustable, and should be set to be less than the minimum time that any voltage is expected to be out of range. For details on how to adjust the buzz frequency, see the TRM.

6.3.1.2 Other Reset Sources

- XRES - External Reset

  PSoC 5LP has either a single GPIO pin that is configured as an external reset or a dedicated XRES pin. Either the dedicated XRES pin or the GPIO pin, if configured, holds the part in reset while held active (low). The response to an XRES is the same as to an IPOR reset.

  The external reset is active low. It includes an internal pull up resistor. XRES is active during sleep and hibernate modes.

  After XRES has been deasserted, at least 10 µs must elapse before it can be reasserted.

- SRES - Software Reset

  A reset can be commanded under program control by setting a bit in the software reset register. This is done either directly by the program or indirectly by DMA access. The response to a SRES is the same as after an IPOR reset.

  Another register bit exists to disable this function.

- WRES - Watchdog Timer Reset

  The watchdog reset detects when the software program is no longer being executed correctly. To indicate to the watchdog timer that it is running correctly, the program must periodically reset the timer. If the timer is not reset before a user-specified amount of time, then a reset is generated.

  Note IPOR disables the watchdog function. The program must enable the watchdog function at an appropriate point in the code by setting a register bit. When this bit is set, it cannot be cleared again except by an IPOR power on reset event.

6.4 I/O System and Routing

PSoC I/Os are extremely flexible. Every GPIO has analog and digital I/O capability. All I/Os have a large number of drive modes, which are set at POR. PSoC also provides up to four individual I/O voltage domains through the VDDIO pins.

There are two types of I/O pins on every device; those with USB provide a third type. Both General Purpose I/O (GPIO) and Special I/O (SIO) provide similar digital functionality. The primary differences are their analog capability and drive strength. Devices that include USB also provide two USBIO pins that support specific USB functionality as well as limited GPIO capability.

All I/O pins are available for use as digital inputs and outputs for both the CPU and digital peripherals. In addition, all I/O pins can generate an interrupt. The flexible and advanced capabilities of the PSoC I/O, combined with any signal to any pin routability, greatly simplify circuit design and board layout. All GPIO pins can be used for analog input, CapSense[10], and LCD segment drive, while SIO pins are used for voltages in excess of VDDA and for programmable output voltages.

- Features supported by both GPIO and SIO:
  - User programmable port reset state
  - Separate I/O supplies and voltages for up to four groups of I/O
  - Digital peripherals use DSI to connect the pins
  - Input or output or both for CPU and DMA
  - Eight drive modes
  - Every pin can be an interrupt source configured as rising edge, falling edge or both edges. If required, level sensitive interrupts are supported through the DSI
  - Dedicated port interrupt vector for each port
  - Slew rate controlled digital output drive mode
  - Access port control and configuration registers on either port basis or pin basis
  - Separate port read (PS) and write (DR) data registers to avoid read modify write errors
  - Special functionality on a pin by pin basis
- Additional features only provided on the GPIO pins:
  - LCD segment drive on LCD equipped devices
  - CapSense[10]
  - Analog input and output capability
  - Continuous 100 µA clamp current capability
  - Standard drive strength down to 1.71 V
- Additional features only provided on SIO pins:
  - Higher drive strength than GPIO
  - Hot swap capability (5 V tolerance at any operating VDD)
  - Programmable and regulated high input and output drive levels down to 1.2 V
  - No analog input, CapSense, or LCD capability
  - Overvoltage tolerance up to 5.5 V
  - SIO can act as a general purpose analog comparator

Note
10. GPIOs with opamp outputs are not recommended for use with CapSense.

- USBIO features:
  - Full speed USB 2.0 compliant I/O
  - Highest drive strength for general purpose use
  - Input, output, or both for CPU and DMA
  - Input, output, or both for digital peripherals
  - Digital output (CMOS) drive mode
  - Each pin can be an interrupt source configured as rising edge, falling edge, or both edges

Figure 6-8. GPIO Block Diagram

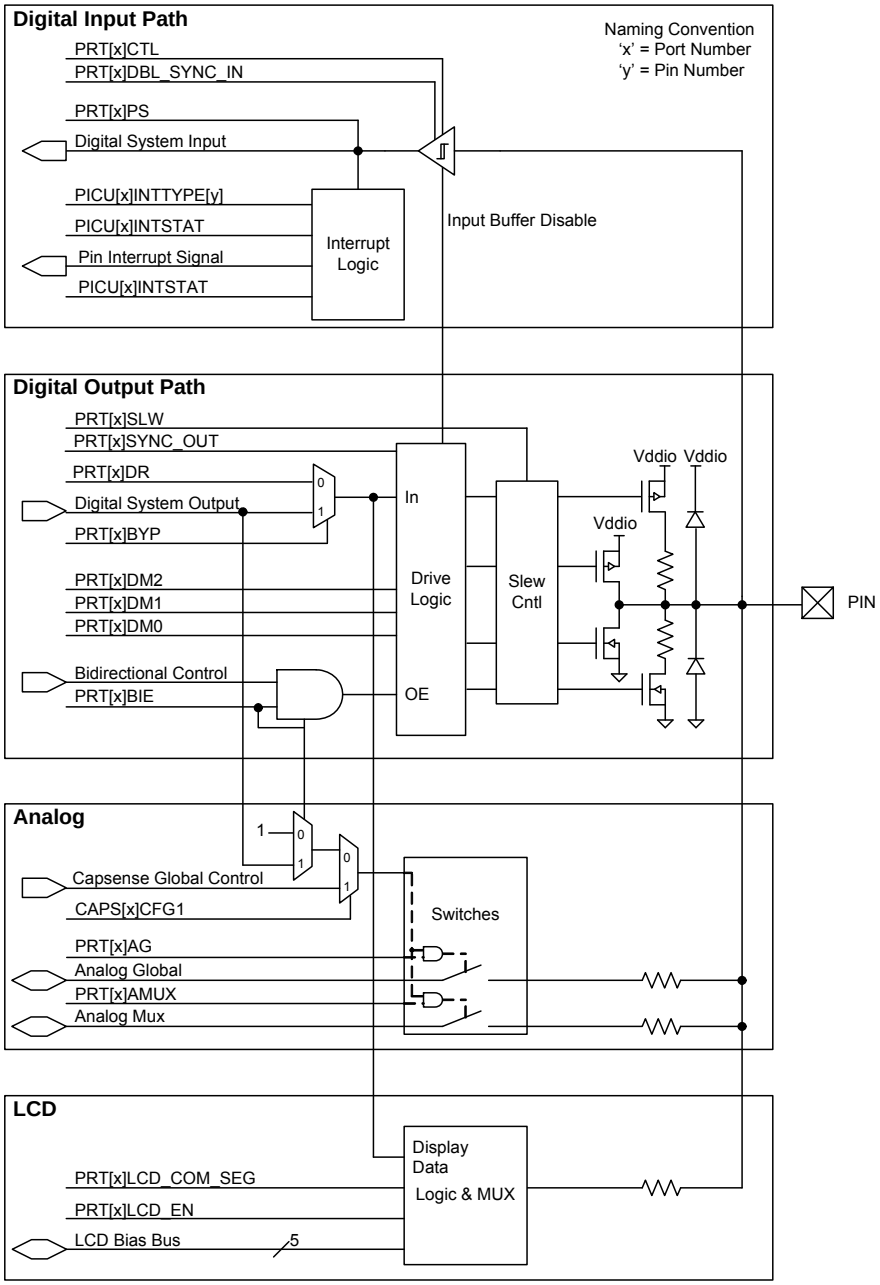

Figure 6-9. SIO Input/Output Block Diagram

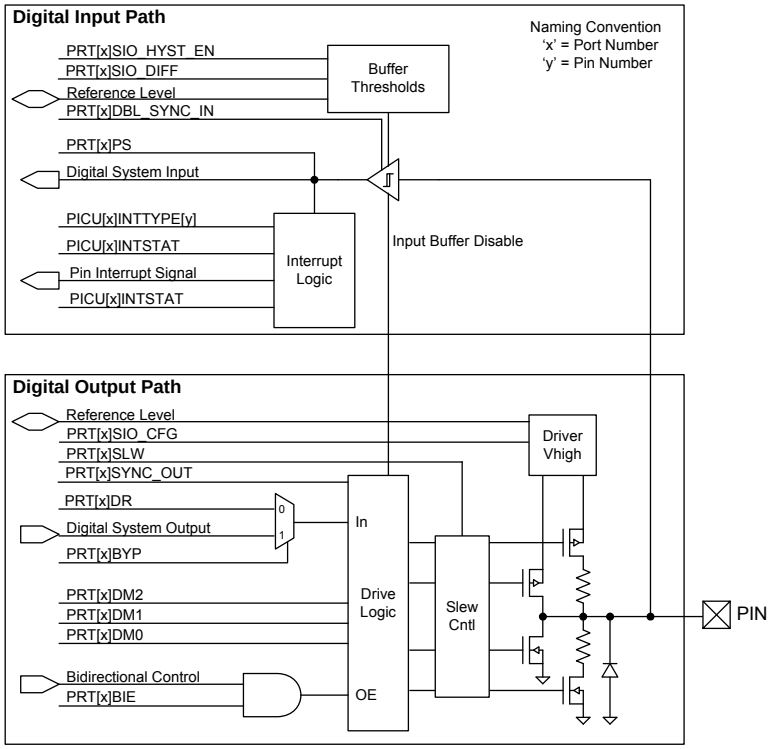

Figure 6-10. USBIO Block Diagram

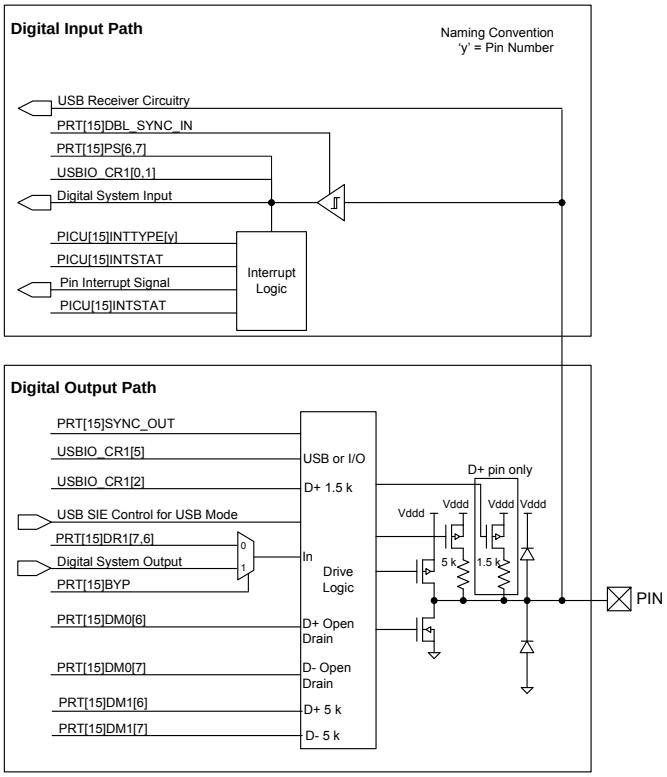

6.4.1 Drive Modes

Each GPIO and SIO pin is individually configurable into one of the eight drive modes listed in Table 6-6. Three configuration bits are used for each pin (DM[2:0]) and set in the PRTxDM[2:0] registers. Figure 6-11 depicts a simplified pin view based on each of the eight drive modes. Table 6-6 shows the I/O pin's drive state based on the port data register value or digital array signal if bypass mode is selected. Note that the actual I/O pin voltage is determined by a combination of the selected drive mode and the load at the pin. For example, if a GPIO pin is configured for resistive pull up mode and driven high while the pin is floating, the voltage measured at the pin is a high logic state. If the same GPIO pin is externally tied to ground then the voltage unmeasured at the pin is a low logic state.

Figure 6-11. Drive Mode

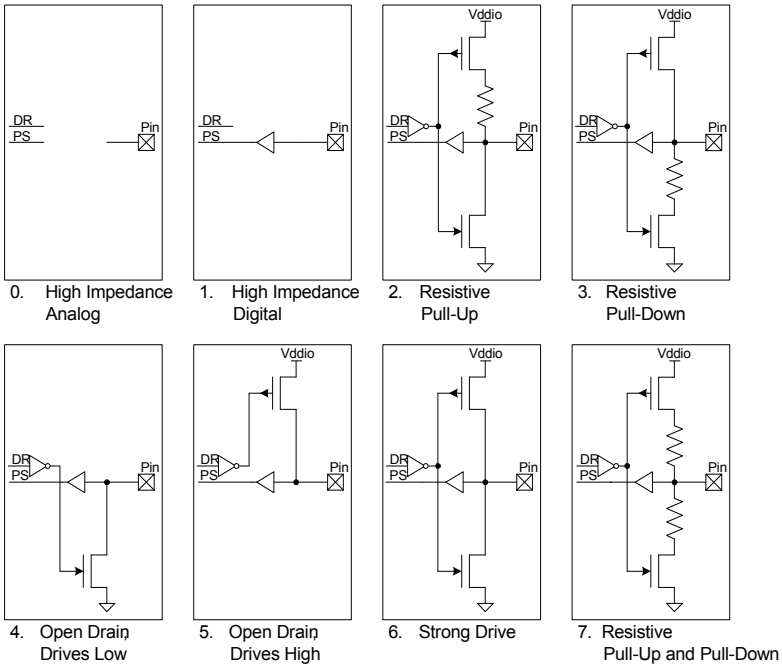

Table 6-6. Drive Modes

Diagram	Drive Mode	PRTxDM2	PRTxDM1	PRTxDM0	PRTxDR = 1	PRTxDR = 0
0	High impedance analog	0	0	0	High Z	High Z
1	High Impedance digital	0	0	1	High Z	High Z
2	Resistive pull up[11]	0	1	0	Res High (5K)	Strong Low
3	Resistive pull down[11]	0	1	1	Strong High	Res Low (5K)
4	Open drain, drives low	1	0	0	High Z	Strong Low
5	Open drain, drive high	1	0	1	Strong High	High Z
6	Strong drive	1	1	0	Strong High	Strong Low
7	Resistive pull up and pull down[11]	1	1	1	Res High (5K)	Res Low (5K)

Note
11. Resistive pull up and pull down are not available with SIO in regulated output mode.

The USBIO pins (P15[7] and P15[6]), when enabled for I/O mode, have limited drive mode control. The drive mode is set using the PRT15.DM0[7, 6] register. A resistive pull option is also available at the USBIO pins, which can be enabled using the PRT15.DM1[7, 6] register. When enabled for USB mode, the drive mode control has no impact on the configuration of the USB pins. Unlike the GPIO and SIO configurations, the port wide configuration registers do not configure the USB drive mode bits. Table 6-7 shows the drive mode configuration for the USBIO pins.

Table 6-7. USBIO Drive Modes (P15[7] and P15[6])

PRT15.DM1[7,6] Pull up enable	PRT15.DM0[7,6] Drive Mode enable	PRT15.DR[7,6] = 1	PRT15.DR[7,6] = 0	Description
0	0	High Z	Strong Low	Open Drain, Strong Low
0	1	Strong High	Strong Low	Strong Outputs
1	0	Res High (5k)	Strong Low	Resistive Pull Up, Strong Low
1	1	Strong High	Strong Low	Strong Outputs

- High impedance analog

  The default reset state with both the output driver and digital input buffer turned off. This prevents any current from flowing in the I/O's digital input buffer due to a floating voltage. This state is recommended for pins that are floating or that support an analog voltage. High impedance analog pins do not provide digital input functionality.

  To achieve the lowest chip current in sleep modes, all I/Os must either be configured to the high impedance analog mode, or have their pins driven to a power supply rail by the PSoC device or by external circuitry.

- High impedance digital

  The input buffer is enabled for digital signal input. This is the standard high impedance (HiZ) state recommended for digital inputs.

- Resistive pull up or resistive pull down

  Resistive pull up or pull down, respectively, provides a series resistance in one of the data states and strong drive in the other. Pins can be used for digital input and output in these modes. Interfacing to mechanical switches is a common application for these modes. Resistive pull up and pull down are not available with SIO in regulated output mode.

- Open drain, drives high and open drain, drives low

  Open drain modes provide high impedance in one of the data states and strong drive in the other. Pins can be used for digital input and output in these modes. A common application for these modes is driving the I^2C bus signal lines.

- Strong drive

  Provides a strong CMOS output drive in either high or low state. This is the standard output mode for pins. Strong Drive mode pins must not be used as inputs under normal circumstances. This mode is often used to drive digital output signals or external FETs.

- Resistive pull up and pull down

  Similar to the resistive pull up and resistive pull down modes except the pin is always in series with a resistor. The high data state is pull up while the low data state is pull down. This mode is most often used when other signals that may cause shorts can drive the bus. Resistive pull up and pull down are not available with SIO in regulated output mode.

6.4.2 Pin Registers

Registers to configure and interact with pins come in two forms that may be used interchangeably.

All I/O registers are available in the standard port form, where each bit of the register corresponds to one of the port pins. This register form is efficient for quickly reconfiguring multiple port pins at the same time.

I/O registers are also available in pin form, which combines the eight most commonly used port register bits into a single register for each pin. This enables very fast configuration changes to individual pins with a single register write.

6.4.3 Bidirectional Mode

High speed bidirectional capability allows pins to provide both the high impedance digital drive mode for input signals and a second user selected drive mode such as strong drive (set using PRTxDM[2:0] registers) for output signals on the same pin, based on the state of an auxiliary control bus signal. The bidirectional capability is useful for processor busses and communications interfaces such as the SPI Slave MISO pin that requires dynamic hardware control of the output buffer.

The auxiliary control bus routes up to 16 UDB or digital peripheral generated output enable signals to one or more pins.

6.4.4 Slew Rate Limited Mode

GPIO and SIO pins have fast and slow output slew rate options for strong and open drain drive modes, not resistive drive modes. Because it results in reduced EMI, the slow edge rate option is recommended for signals that are not speed critical, generally less than 1 MHz. The fast slew rate is for signals between 1 MHz and 33 MHz. The slew rate is individually configurable for each pin, and is set by the PRTxSLW registers.

6.4.5 Pin Interrupts

All GPIO and SIO pins are able to generate interrupts to the system. All eight pins in each port interface to their own Port Interrupt Control Unit (PICU) and associated interrupt vector. Each pin of the port is independently configurable to detect rising edge, falling edge, both edge interrupts, or to not generate an interrupt.

Depending on the configured mode for each pin, each time an interrupt event occurs on a pin, its corresponding status bit of the interrupt status register is set to "1" and an interrupt request is sent to the interrupt controller. Each PICU has its own interrupt

vector in the interrupt controller and the pin status register providing easy determination of the interrupt source down to the pin level.

Port pin interrupts remain active in all sleep modes allowing the PSoC device to wake from an externally generated interrupt. While level sensitive interrupts are not directly supported; Universal Digital Blocks (UDB) provide this functionality to the system when needed.

6.4.6 Input Buffer Mode

GPIO and SIO input buffers can be configured at the port level for the default CMOS input thresholds or the optional LVTTL input thresholds. All input buffers incorporate Schmitt triggers for input hysteresis. Additionally, individual pin input buffers can be disabled in any drive mode.

6.4.7 I/O Power Supplies

Up to four I/O pin power supplies are provided depending on the device and package. Each I/O supply must be less than or equal to the voltage on the chip's analog (VDDA) pin. This feature allows users to provide different I/O voltage levels for different pins on the device. Refer to the specific device package pinout to determine VDDIO capability for a given port and pin. The SIO port pins support an additional regulated high output capability, as described in Adjustable Output Level.

6.4.8 Analog Connections

These connections apply only to GPIO pins. All GPIO pins may be used as analog inputs or outputs. The analog voltage present on the pin must not exceed the VDDIO supply voltage to which the GPIO belongs. Each GPIO may connect to one of the analog global busses or to one of the analog mux buses to connect any pin to any internal analog resource such as ADC or comparators. In addition, select pins provide direct connections to specific analog features such as the high current DACs or uncommitted opamps.

6.4.9 CapSense

This section applies only to GPIO pins. All GPIO pins may be used to create CapSense buttons and sliders[12]. See the "CapSense" section on page 55 for more information.

6.4.10 LCD Segment Drive

This section applies only to GPIO pins. All GPIO pins may be used to generate Segment and Common drive signals for direct glass drive of LCD glass. See the "LCD Direct Drive" section on page 55 for details.

6.4.11 Adjustable Output Level

This section applies only to SIO pins. SIO port pins support the ability to provide a regulated high output level for interface to external signals that are lower in voltage than the SIO's respective VDDIO. SIO pins are individually configurable to output either the standard V_{DDIO} level or the regulated output, which is based on an internally generated reference. Typically a voltage DAC (VDAC) is used to generate the reference (see Figure 6-12). The "DAC" section on page 56 has more details on VDAC use and reference routing to the SIO pins. Resistive pull up and pull down drive modes are not available with SIO in regulated output mode.

6.4.12 Adjustable Input Level

This section applies only to SIO pins. SIO pins by default support the standard CMOS and LVTTL input levels but also support a differential mode with programmable levels. SIO pins are grouped into pairs. Each pair shares a reference generator block which, is used to set the digital input buffer reference level for interface to external signals that differ in voltage from VDDIO. The reference sets the pins voltage threshold for a high logic level (see Figure 6-12). Available input thresholds are:

- 0.5 × VDDIO
- 0.4 × VDDIO
- 0.5 × VREF
- VREF

Typically a voltage DAC (VDAC) generates the VREF reference. "DAC" section on page 56 has more details on VDAC use and reference routing to the SIO pins.

Figure 6-12. SIO Reference for Input and Output

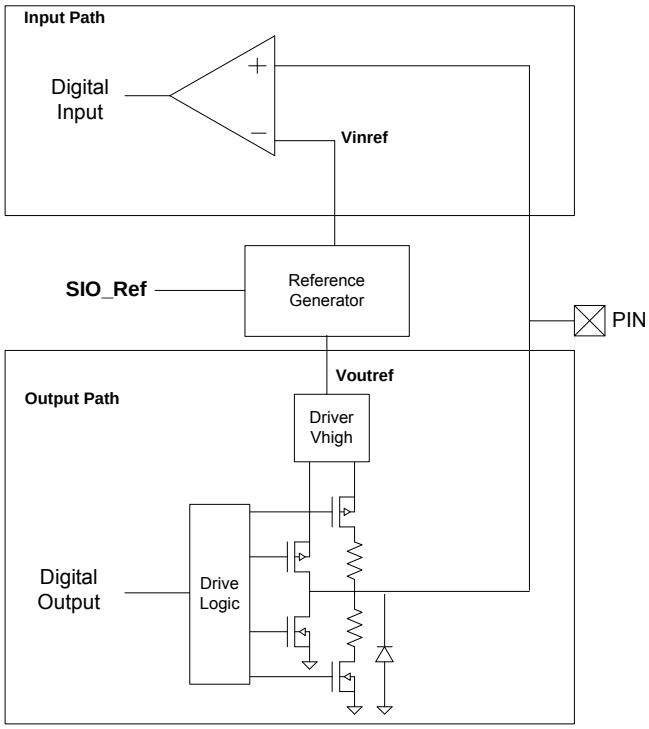

Note
12. GPIOs with opamp outputs are not recommended for use with CapSense.

6.4.13 SIO as Comparator

This section applies only to SIO pins. The adjustable input level feature of the SIOs as explained in the Adjustable Input Level section can be used to construct a comparator. The threshold for the comparator is provided by the SIO's reference generator. The reference generator has the option to set the analog signal routed through the analog global line as threshold for the comparator. Note that a pair of SIO pins share the same threshold.

The digital input path in Figure 6-9 on page 30 illustrates this functionality. In the figure, 'Reference level' is the analog signal routed through the analog global. The hysteresis feature can also be enabled for the input buffer of the SIO, which increases noise immunity for the comparator.

6.4.14 Hot Swap

This section applies only to SIO pins. SIO pins support 'hot swap' capability to plug into an application without loading the signals that are connected to the SIO pins even when no power is applied to the PSoC device. This allows the unpowered PSoC to maintain a high impedance load to the external device while also preventing the PSoC from being powered through a SIO pin's protection diode.

Powering the device up or down while connected to an operational I2C bus may cause transient states on the SIO pins. The overall I2C bus design should take this into account.

6.4.15 Over Voltage Tolerance

All I/O pins provide an over voltage tolerance feature at any operating VDD.

- There are no current limitations for the SIO pins as they present a high impedance load to the external circuit.
- The GPIO pins must be limited to 100 µA using a current limiting resistor. GPIO pins clamp the pin voltage to approximately one diode above the VDDIO supply.
- In case of a GPIO pin configured for analog input/output, the analog voltage on the pin must not exceed the VDDIO supply voltage to which the GPIO belongs.

A common application for this feature is connection to a bus such as I^2C where different devices are running from different supply voltages. In the I^2C case, the PSoC chip is configured into the Open Drain, Drives Low mode for the SIO pin. This allows an external pull up to pull the I^2C bus voltage above the PSoC pin supply. For example, the PSoC chip could operate at 1.8 V, and an external device could run from 5 V. Note that the SIO pin's VIH and VIL levels are determined by the associated VDDIO supply pin.

The SIO pin must be in one of the following modes: 0 (high impedance analog), 1 (high impedance digital), or 4 (open drain drives low). See Figure 6-11 for details. Absolute maximum ratings for the device must be observed for all I/O pins.

6.4.16 Reset Configuration

While reset is active all I/Os are reset to and held in the High Impedance Analog state. After reset is released, the state can be reprogrammed on a port-by-port basis to pull down or pull up. To ensure correct reset operation, the port reset configuration data is stored in special nonvolatile registers. The stored reset data is automatically transferred to the port reset configuration registers at reset release.

6.4.17 Low Power Functionality

In all low power modes the I/O pins retain their state until the part is awakened and changed or reset. To awaken the part, use a pin interrupt, because the port interrupt logic continues to function in all low power modes.

6.4.18 Special Pin Functionality

Some pins on the device include additional special functionality in addition to their GPIO or SIO functionality. The specific special function pins are listed in "Pinouts" on page 5. The special features are:

- Digital
  - 4 to 25 MHz crystal oscillator
  - 32.768 kHz crystal oscillator
  - Wake from sleep on I^2C address match. Any pin can be used for I^2C if wake from sleep is not required.
  - JTAG interface pins
  - SWD interface pins
  - SWV interface pins
  - TRACEPORT interface pins
  - External reset
- Analog
  - Opamp inputs and outputs
  - High current IDAC outputs
  - External reference inputs

6.4.19 JTAG Boundary Scan

The device supports standard JTAG boundary scan chains on all pins for board level test.

7. Digital Subsystem

The digital programmable system creates application specific combinations of both standard and advanced digital peripherals and custom logic functions. These peripherals and logic are then interconnected to each other and to any pin on the device, providing a high level of design flexibility and IP security.

The features of the digital programmable system are outlined here to provide an overview of capabilities and architecture. You do not need to interact directly with the programmable digital system at the hardware and register level. PSoC Creator provides a high level schematic capture graphical interface to automatically place and route resources similar to PLDs.

The main components of the digital programmable system are:

- Universal Digital Blocks (UDB) - These form the core functionality of the digital programmable system. UDBs are a collection of uncommitted logic (PLD) and structural logic (Datapath) optimized to create all common embedded peripherals and customized functionality that are application or design specific.
- Universal Digital Block array - UDB blocks are arrayed within a matrix of programmable interconnect. The UDB array structure is homogeneous and allows for flexible mapping of digital functions onto the array. The array supports extensive and flexible routing interconnects between UDBs and the Digital System Interconnect.

- Digital System Interconnect (DSI) - Digital signals from Universal Digital Blocks (UDBs), fixed function peripherals, I/O pins, interrupts, DMA, and other system core signals are attached to the Digital System Interconnect to implement full featured device connectivity. The DSI allows any digital function to any pin or other feature routability when used with the Universal Digital Block array.

Figure 7-1. CY8C56LP Digital Programmable Architecture

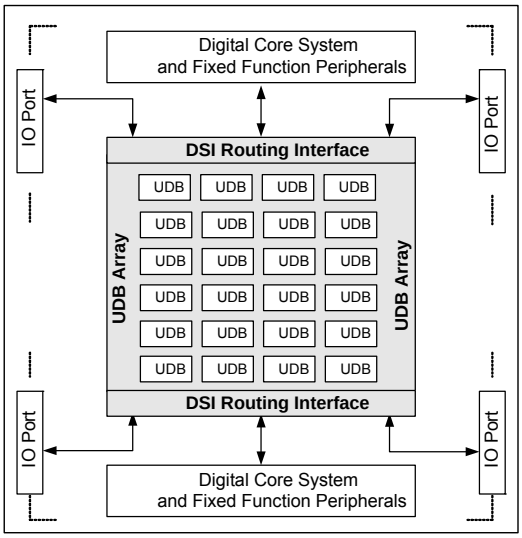

7.1 Example Peripherals

The flexibility of the CY8C56LP family's Universal Digital Blocks (UDBs) and Analog Blocks allow the user to create a wide range of components (peripherals). The most common peripherals were built and characterized by Cypress and are shown in the PSoC Creator component catalog, however, users may also create their own custom components using PSoC Creator. Using PSoC Creator, users may also create their own components for reuse within their organization, for example sensor interfaces, proprietary algorithms, and display interfaces.

The number of components available through PSoC Creator is too numerous to list in the datasheet, and the list is always growing. An example of a component available for use in CY8C56LP family, but, not explicitly called out in this datasheet is the UART component.

7.1.1 Example Digital Components

The following is a sample of the digital components available in PSoC Creator for the CY8C56LP family. The exact amount of hardware resources (UDBs, routing, RAM, flash) used by a component varies with the features selected in PSoC Creator for the component.

- Communications
  - I^2C
  - UART
  - SPI
- Functions
  - EMIF
  - PWMs
  - Timers
  - Counters
- Logic
  - NOT
  - OR
  - XOR
  - AND

7.1.2 Example Analog Components

The following is a sample of the analog components available in PSoC Creator for the CY8C56LP family. The exact amount of hardware resources (SC/CT blocks, routing, RAM, flash) used by a component varies with the features selected in PSoC Creator for the component.

- Amplifiers
  - TIA
  - PGA
  - opamp
- ADCs
  - Delta-Sigma
  - Successive Approximation (SAR)
- DACs
  - Current
  - Voltage
  - PWM
- Comparators
- Mixers

7.1.3 Example System Function Components

The following is a sample of the system function components available in PSoC Creator for the CY8C56LP family. The exact amount of hardware resources (UDBs, DFB taps, SC/CT blocks, routing, RAM, flash) used by a component varies with the features selected in PSoC Creator for the component.

- CapSense
- LCD Drive
- LCD Control
- Filters

7.1.4 Designing with PSoC Creator

7.1.4.1 More Than a Typical IDE

A successful design tool allows for the rapid development and deployment of both simple and complex designs. It reduces or eliminates any learning curve. It makes the integration of a new design into the production stream straightforward.

PSoC Creator is that design tool.

PSoC Creator is a full featured Integrated Development Environment (IDE) for hardware and software design. It is optimized specifically for PSoC devices and combines a modern, powerful software development platform with a sophisticated graphical design tool. This unique combination of tools makes PSoC Creator the most flexible embedded design platform available.

Graphical design entry simplifies the task of configuring a particular part. You can select the required functionality from an extensive catalog of components and place it in your design. All components are parameterized and have an editor dialog that allows you to tailor functionality to your needs.

PSoC Creator automatically configures clocks and routes the I/O to the selected pins and then generates APIs to give the application complete control over the hardware. Changing the PSoC device configuration is as simple as adding a new component, setting its parameters, and rebuilding the project.

At any stage of development you are free to change the hardware configuration and even the target processor. To retarget your application (hardware and software) to new devices, even from 8- to 32-bit families, just select the new device and rebuild.

You also have the ability to change the C compiler and evaluate an alternative. Components are designed for portability and are validated against all devices, from all families, and against all supported tool chains Switching compilers is as easy as editing the from the project options and rebuilding the application with no errors from the generated APIs or boot code.

7.1.4.2 Component Catalog

The component catalog is a repository of reusable design elements that select device functionality and customize your PSoC device. It is populated with an impressive selection of content; from simple primitives such as logic gates and device registers, through the digital timers, counters and PWMs, plus analog components such as ADCs, DACs, and filters, and communication protocols, such as I^2C, USB, and CAN. See "Example Peripherals" section on page 35 for more details about available peripherals. All content is fully characterized and carefully documented in datasheets with code examples, AC/DC specifications, and user code ready APIs.

7.1.4.3 Design Reuse

The symbol editor gives you the ability to develop reusable components that can significantly reduce future design time. Just draw a symbol and associate that symbol with your proven design. PSoC Creator allows for the placement of the new symbol anywhere in the component catalog along with the content provided by Cypress. You can then reuse your content as many times as you want, and in any number of projects, without ever having to revisit the details of the implementation.

7.1.4.4 Software Development

Anchoring the tool is a modern, highly customizable user interface. It includes project management and integrated editors for C and assembler source code, as well the design entry tools.

Project build control leverages compiler technology from top commercial vendors such as ARM® Limited, Keil™, and CodeSourcery (GNU). Free versions of Keil C51 and GNU C Compiler (GCC) for ARM, with no restrictions on code size or end product distribution, are included with the tool distribution. Upgrading to more optimizing compilers is a snap with support for the professional Keil C51 product and ARM RealView™ compiler.

7.1.4.5 Nonintrusive Debugging

With JTAG (4-wire) and SWD (2-wire) debug connectivity available on all devices, the PSoC Creator debugger offers full control over the target device with minimum intrusion. Breakpoints and code execution commands are all readily available from toolbar buttons and an impressive lineup of windows—register, locals, watch, call stack, memory and peripherals—make for an unparalleled level of visibility into the system.

PSoC Creator contains all the tools necessary to complete a design, and then to maintain and extend that design for years to come. All steps of the design flow are carefully integrated and optimized for ease-of-use and to maximize productivity.

7.2 Universal Digital Block

The Universal Digital Block (UDB) represents an evolutionary step to the next generation of PSoC embedded digital peripheral functionality. The architecture in first generation PSoC digital blocks provides coarse programmability in which a few fixed functions with a small number of options are available. The new UDB architecture is the optimal balance between configuration granularity and efficient implementation. A cornerstone of this approach is to provide the ability to customize the devices digital operation to match application requirements.

To achieve this, UDBs consist of a combination of uncommitted logic (PLD), structured logic (Datapath), and a flexible routing scheme to provide interconnect between these elements, I/O connections, and other peripherals. UDB functionality ranges from simple self contained functions that are implemented in one UDB, or even a portion of a UDB (unused resources are available for other functions), to more complex functions that require multiple UDBs. Examples of basic functions are timers, counters, CRC generators, PWMs, dead band generators, and communications functions, such as UARTs, SPI, and I^2C. Also, the PLD blocks and connectivity provide full featured general purpose programmable logic within the limits of the available resources.

Figure 7-2. UDB Block Diagram

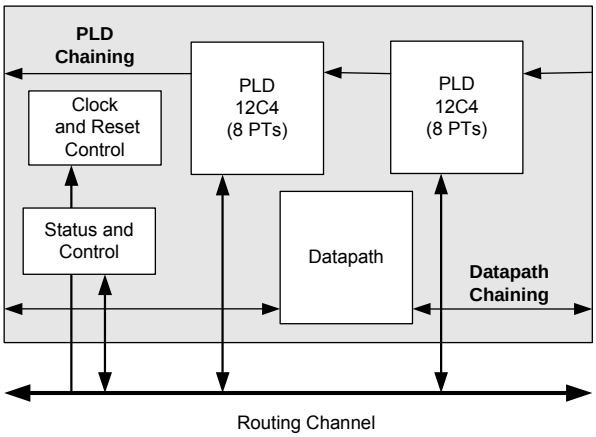

The main component blocks of the UDB are:

- PLD blocks - There are two small PLDs per UDB. These blocks take inputs from the routing array and form registered or combinational sum-of-products logic. PLDs are used to implement state machines, state bits, and combinational logic equations. PLD configuration is automatically generated from graphical primitives.
- Datapath Module - This 8-bit wide datapath contains structured logic to implement a dynamically configurable ALU, a variety of compare configurations and condition generation. This block also contains input/output FIFOs, which are the primary parallel data interface between the CPU/DMA system and the UDB.
- Status and Control Module - The primary role of this block is to provide a way for CPU firmware to interact and synchronize with UDB operation.
- Clock and Reset Module - This block provides the UDB clocks and reset selection and control.

7.2.1 PLD Module

The primary purpose of the PLD blocks is to implement logic expressions, state machines, sequencers, look up tables, and decoders. In the simplest use model, consider the PLD blocks as a standalone resource onto which general purpose RTL is synthesized and mapped. The more common and efficient use model is to create digital functions from a combination of PLD and datapath blocks, where the PLD implements only the random logic and state portion of the function while the datapath (ALU) implements the more structured elements.

Figure 7-3. PLD 12C4 Structure

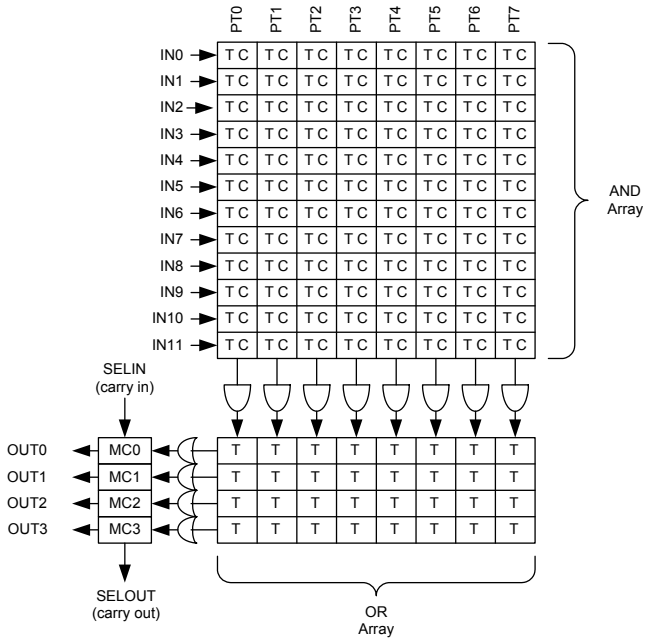

One 12C4 PLD block is shown in Figure 7-3. This PLD has 12 inputs, which feed across eight product terms. Each product term (AND function) can be from 1 to 12 inputs wide, and in a given product term, the true (T) or complement (C) of each input can be selected. The product terms are summed (OR function) to create the PLD outputs. A sum can be from 1 to 8 product terms wide. The 'C' in 12C4 indicates that the width of the OR gate (in this case 8) is constant across all outputs (rather than variable as in a 22V10 device). This PLA like structure gives maximum flexibility and insures that all inputs and outputs are permutable for ease of allocation by the software tools. There are two 12C4 PLDs in each UDB.

7.2.2 Datapath Module

The datapath contains an 8-bit single cycle ALU, with associated compare and condition generation logic. This datapath block is optimized to implement embedded functions, such as timers, counters, integrators, PWMs, PRS, CRC, shifters and dead band generators and many others.

Figure 7-4. Datapath Top Level

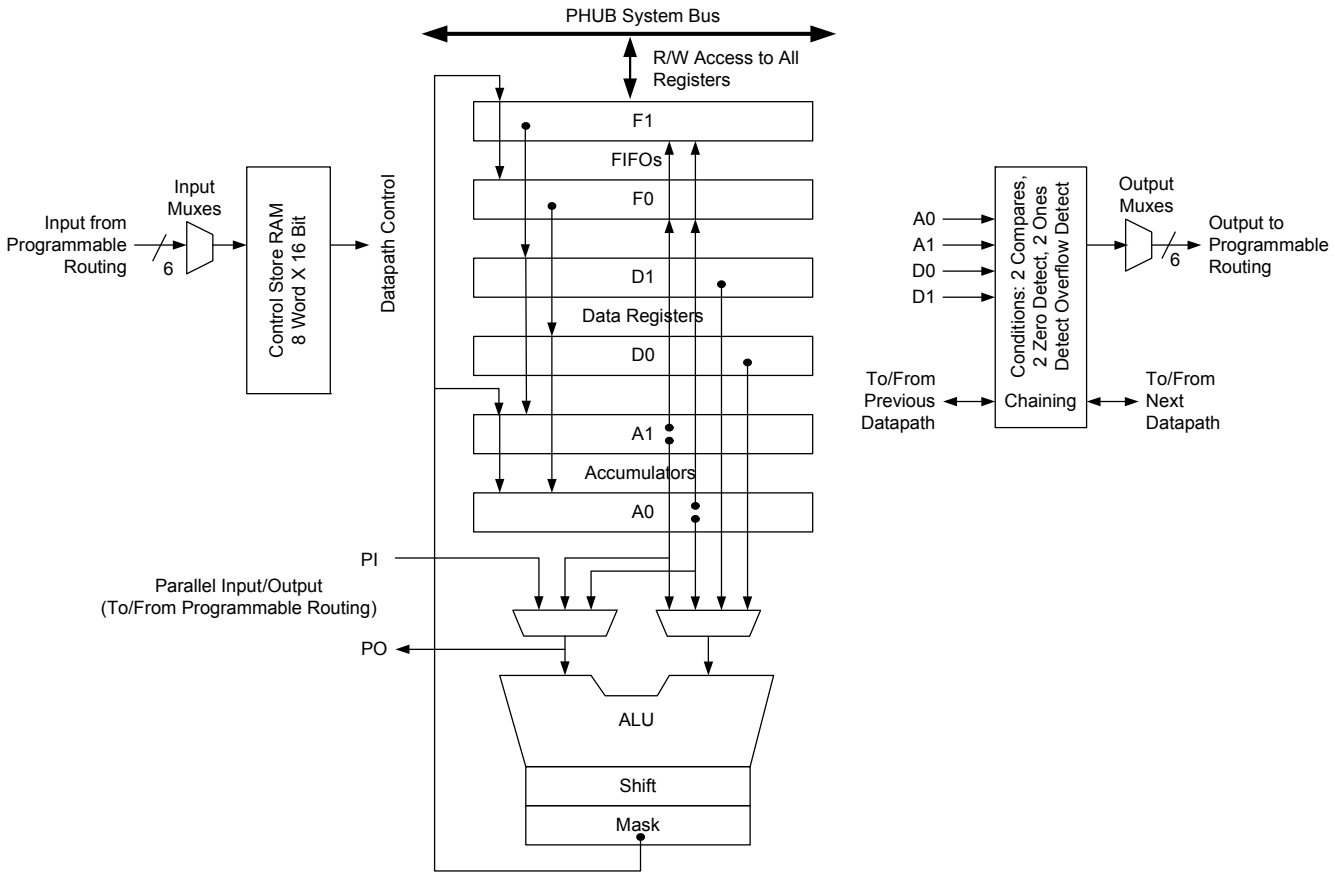

7.2.2.6 *Working Registers*

The datapath contains six primary working registers, which are accessed by CPU firmware or DMA during normal operation.

Table 7-1. Working Datapath Registers

Name	Function	Description
A0 and A1	Accumulators	These are sources and sinks for the ALU and also sources for the compares.
D0 and D1	Data Registers	These are sources for the ALU and sources for the compares.
F0 and F1	FIFOs	These are the primary interface to the system bus. They can be a data source for the data registers and accumulators or they can capture data from the accumulators or ALU. Each FIFO is four bytes deep.

7.2.2.7 *Dynamic Datapath Configuration RAM*

Dynamic configuration is the ability to change the datapath function and internal configuration on a cycle-by-cycle basis, under sequencer control. This is implemented using the 8-word x 16-bit configuration RAM, which stores eight unique 16-bit wide configurations. The address input to this RAM controls the sequence, and can be routed from any block connected to the UDB routing matrix, most typically PLD logic, I/O pins, or from the outputs of this or other datapath blocks.

ALU

The ALU performs eight general-purpose functions. They are:

- Increment
- Decrement
- Add
- Subtract
- Logical AND
- Logical OR
- Logical XOR
- Pass, used to pass a value through the ALU to the shift register, mask, or another UDB register

Independent of the ALU operation, these functions are available:

- Shift left
- Shift right
- Nibble swap
- Bitwise OR mask

7.2.2.8 Conditionals

Each datapath has two compares, with bit masking options. Compare operands include the two accumulators and the two data registers in a variety of configurations. Other conditions include zero detect, all ones detect, and overflow. These conditions are the primary datapath outputs, a selection of which can be driven out to the UDB routing matrix. Conditional computation can use the built in chaining to neighboring UDBs to operate on wider data widths without the need to use routing resources.

7.2.2.9 Variable MSB

The most significant bit of an arithmetic and shift function can be programmatically specified. This supports variable width CRC and PRS functions, and in conjunction with ALU output masking, can implement arbitrary width timers, counters and shift blocks.

7.2.2.10 Built in CRC/PRS

The datapath has built in support for single cycle Cyclic Redundancy Check (CRC) computation and Pseudo Random Sequence (PRS) generation of arbitrary width and arbitrary polynomial. CRC/PRS functions longer than 8 bits may be implemented in conjunction with PLD logic, or built in chaining may be use to extend the function into neighboring UDBs.

7.2.2.11 Input/Output FIFOs

Each datapath contains two four-byte deep FIFOs, which can be independently configured as an input buffer (system bus writes to the FIFO, datapath internal reads the FIFO), or an output buffer (datapath internal writes to the FIFO, the system bus reads from the FIFO). The FIFOs generate status that are selectable as datapath outputs and can therefore be driven to the routing, to interact with sequencers, interrupts, or DMA.

Figure 7-5. Example FIFO Configurations

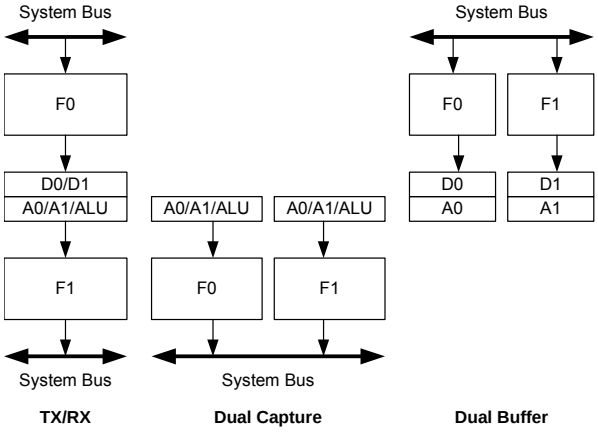

7.2.2.12 Chaining

The datapath can be configured to chain conditions and signals such as carries and shift data with neighboring datapaths to create higher precision arithmetic, shift, CRC/PRS functions.

7.2.2.13 Time Multiplexing

In applications that are over sampled, or do not need high clock rates, the single ALU block in the datapath can be efficiently shared with two sets of registers and condition generators. Carry and shift out data from the ALU are registered and can be selected as inputs in subsequent cycles. This provides support for 16-bit functions in one (8-bit) datapath.

7.2.2.14 Datapath I/O

There are six inputs and six outputs that connect the datapath to the routing matrix. Inputs from the routing provide the configuration for the datapath operation to perform in each cycle, and the serial data inputs. Inputs can be routed from other UDB blocks, other device peripherals, device I/O pins, and so on. The outputs to the routing can be selected from the generated conditions, and the serial data outputs. Outputs can be routed to other UDB blocks, device peripherals, interrupt and DMA controller, I/O pins, and so on.

7.2.3 Status and Control Module

The primary purpose of this circuitry is to coordinate CPU firmware interaction with internal UDB operation.

Figure 7-6. Status and Control Registers

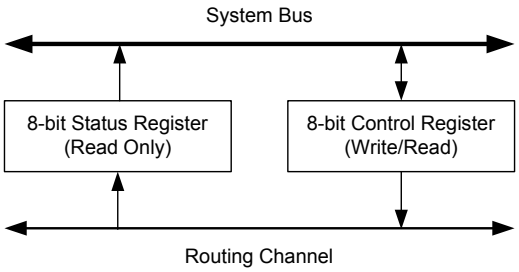

The bits of the control register, which may be written to by the system bus, are used to drive into the routing matrix, and thus provide firmware with the opportunity to control the state of UDB processing. The status register is read-only and it allows internal UDB state to be read out onto the system bus directly from internal routing. This allows firmware to monitor the state of UDB processing. Each bit of these registers has programmable connections to the routing matrix and routing connections are made depending on the requirements of the application.

7.2.3.15 Usage Examples

As an example of control input, a bit in the control register can be allocated as a function enable bit. There are multiple ways to enable a function. In one method the control bit output would be routed to the clock control block in one or more UDBs and serve as a clock enable for the selected UDB blocks. A status example is a case where a PLD or datapath block generated a condition, such as a “compare true” condition that is captured and latched by the status register and then read (and cleared) by CPU firmware.

7.2.3.16 Clock Generation

Each subcomponent block of a UDB including the two PLDs, the datapath, and Status and Control, has a clock selection and control block. This promotes a fine granularity with respect to allocating clocking resources to UDB component blocks and allows unused UDB resources to be used by other functions for maximum system efficiency.

7.3 UDB Array Description

Figure 7-7 shows an example of a 16 UDB array. In addition to the array core, there are a DSI routing interfaces at the top and bottom of the array. Other interfaces that are not explicitly shown include the system interfaces for bus and clock distribution. The UDB array includes multiple horizontal and vertical routing channels each comprised of 96 wires. The wire connections to UDBs, at horizontal/vertical intersection and at the DSI interface are highly permutable providing efficient automatic routing in PSoC Creator. Additionally the routing allows wire by wire segmentation along the vertical and horizontal routing to further increase routing flexibility and capability.

Figure 7-7. Digital System Interface Structure

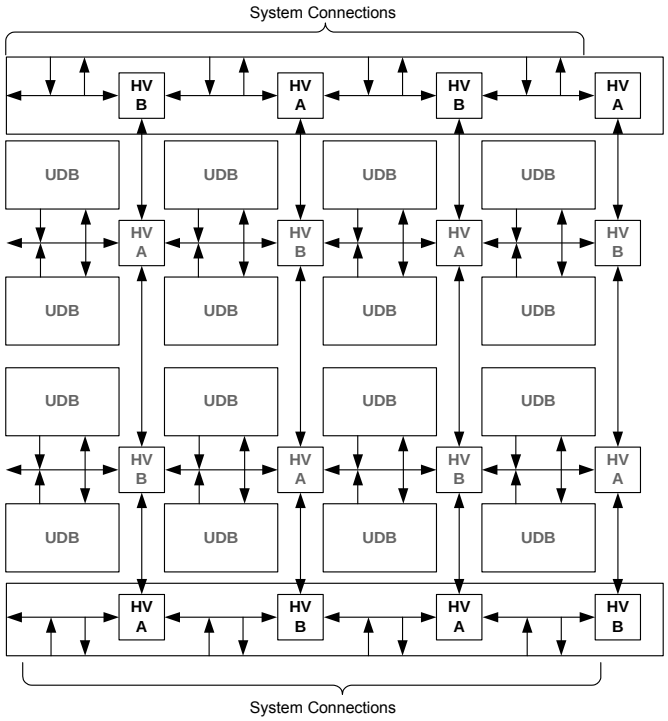

7.3.1 UDB Array Programmable Resources

Figure 7-8 shows an example of how functions are mapped into a bank of 16 UDBs. The primary programmable resources of the UDB are two PLDs, one datapath and one status/control register. These resources are allocated independently, because they have independently selectable clocks, and therefore unused blocks are allocated to other unrelated functions.

An example of this is the 8-bit Timer in the upper left corner of the array. This function only requires one datapath in the UDB, and therefore the PLD resources may be allocated to another function. A function such as a Quadrature Decoder may require more PLD logic than one UDB can supply and in this case can utilize the unused PLD blocks in the 8-bit Timer UDB. Programmable resources in the UDB array are generally homogeneous so functions can be mapped to arbitrary boundaries in the array.

Figure 7-8. Function Mapping Example in a Bank of UDBs

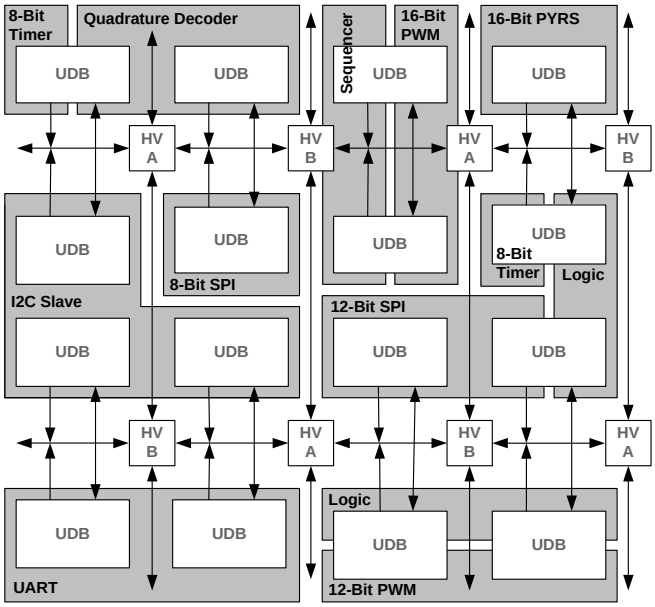

Figure 7-9. Digital System Interconnect

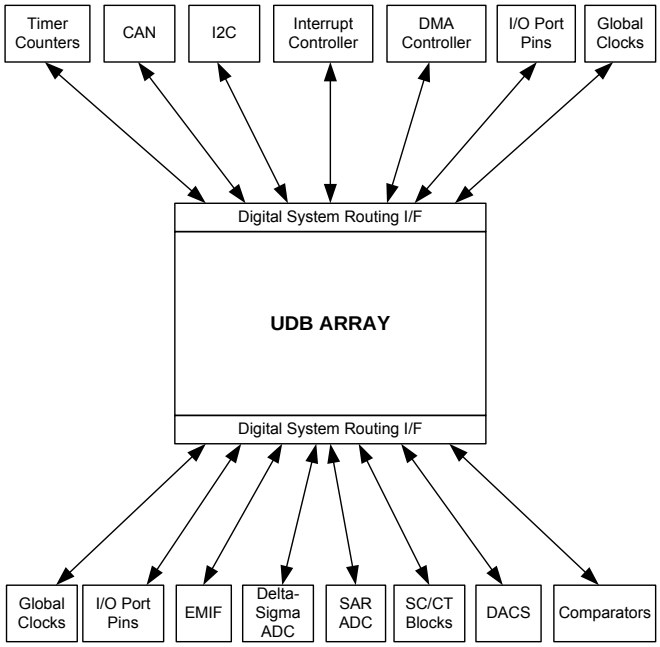

7.4 DSI Routing Interface Description

The DSI routing interface is a continuation of the horizontal and vertical routing channels at the top and bottom of the UDB array core. It provides general purpose programmable routing between device peripherals, including UDBs, I/Os, analog peripherals, interrupts, DMA and fixed function peripherals.

Figure 7-9 illustrates the concept of the digital system interconnect, which connects the UDB array routing matrix with other device peripherals. Any digital core or fixed function peripheral that needs programmable routing is connected to this interface.

Signals in this category include:

- Interrupt requests from all digital peripherals in the system.
- DMA requests from all digital peripherals in the system.
- Digital peripheral data signals that need flexible routing to I/Os.
- Digital peripheral data signals that need connections to UDBs.
- Connections to the interrupt and DMA controllers.
- Connection to I/O pins.
- Connection to analog system digital signals.

Interrupt and DMA routing is very flexible in the CY8C56LP programmable architecture. In addition to the numerous fixed function peripherals that can generate interrupt requests, any data signal in the UDB array routing can also be used to generate a request. A single peripheral may generate multiple independent interrupt requests simplifying system and firmware design. Figure 7-10 shows the structure of the IDMUX (Interrupt/DMA Multiplexer).

Figure 7-10. Interrupt and DMA Processing in the IDMUX

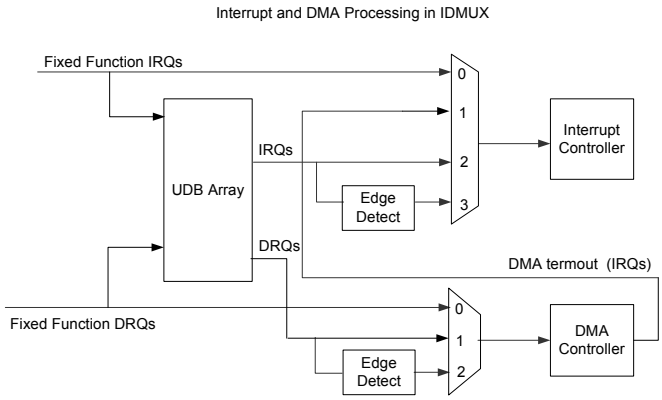

7.4.1 I/O Port Routing

There are a total of 20 DSI routes to a typical 8-bit I/O port, 16 for data and four for drive strength control.

When an I/O pin is connected to the routing, there are two primary connections available, an input and an output. In conjunction with drive strength control, this can implement a bidirectional I/O pin. A data output signal has the option to be single synchronized (pipelined) and a data input signal has the option to be double synchronized. The synchronization clock is the system clock (see Figure 6-1). Normally all inputs from pins are synchronized as this is required if the CPU interacts with the signal or any signal derived from it. Asynchronous inputs have rare uses. An example of this is a feed through of combinational PLD logic from input pins to output pins.

Figure 7-11. I/O Pin Synchronization Routing

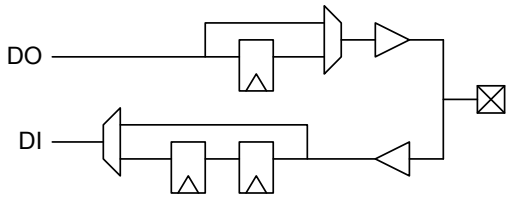

Figure 7-12. I/O Pin Output Connectivity

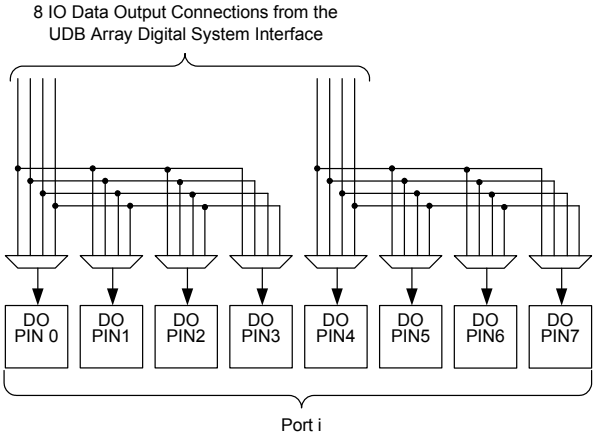

There are four more DSI connections to a given I/O port to implement dynamic output enable control of pins. This connectivity gives a range of options, from fully ganged 8-bits controlled by one signal, to up to four individually controlled pins. The output enable signal is useful for creating tri-state bidirectional pins and buses.

Figure 7-13. I/O Pin Output Enable Connectivity

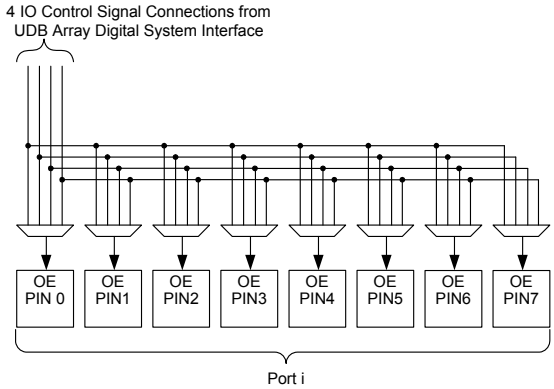

7.5 CAN

The CAN peripheral is a fully functional Controller Area Network (CAN) supporting communication baud rates up to 1 Mbps. The CAN controller implements the CAN2.0A and CAN2.0B specifications as defined in the Bosch specification and conforms to the ISO-11898-1 standard. The CAN protocol was originally designed for automotive applications with a focus on a high level of fault detection. This ensures high communication reliability at a low cost. Because of its success in automotive applications, CAN is used as a standard communication protocol for motion oriented machine control networks (CANOpen) and factory automation applications (DeviceNet). The CAN controller features allow the efficient implementation of higher level protocols without affecting the performance of the microcontroller CPU. Full configuration support is provided in PSoC Creator.

Figure 7-14. CAN Bus System Implementation

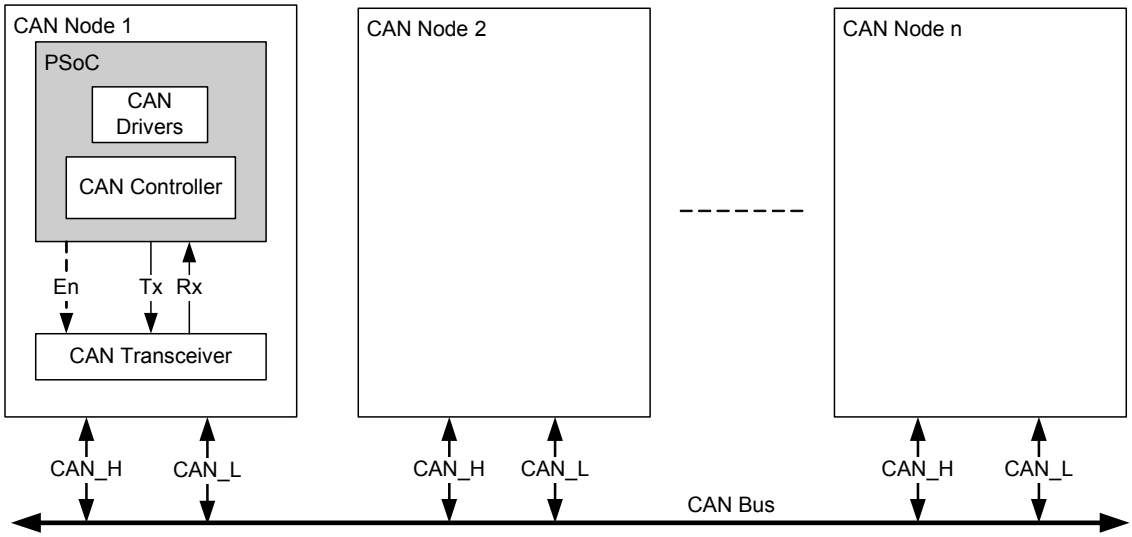

7.5.1 CAN Features

- CAN2.0A/B protocol implementation - ISO 11898 compliant
  - Standard and extended frames with up to 8 bytes of data per frame
  - Message filter capabilities
  - Remote Transmission Request (RTR) support
  - Programmable bit rate up to 1 Mbps
- Listen Only mode
- SW readable error counter and indicator
- Sleep mode: Wake the device from sleep with activity on the Rx pin
- Supports two or three wire interface to external transceiver (Tx, Rx, and Enable). The three-wire interface is compatible with the Philips PHY; the PHY is not included on-chip. The three wires can be routed to any I/O
- Enhanced interrupt controller
  - CAN receive and transmit buffers status
  - CAN controller error status including BusOff
- Receive path
  - 16 receive buffers each with its own message filter
  - Enhanced hardware message filter implementation that covers the ID, IDE and RTR
  - DeviceNet addressing support
  - Multiple receive buffers linkable to build a larger receive message array
  - Automatic transmission request (RTR) response handler
  - Lost received message notification
- Transmit path
  - Eight transmit buffers
  - Programmable transmit priority
  - Round robin
  - Fixed priority
  - Message transmissions abort capability

7.5.2 Software Tools Support

CAN Controller configuration integrated into PSoC Creator:

- CAN Configuration walkthrough with bit timing analyzer
- Receive filter setup

Figure 7-15. CAN Controller Block Diagram

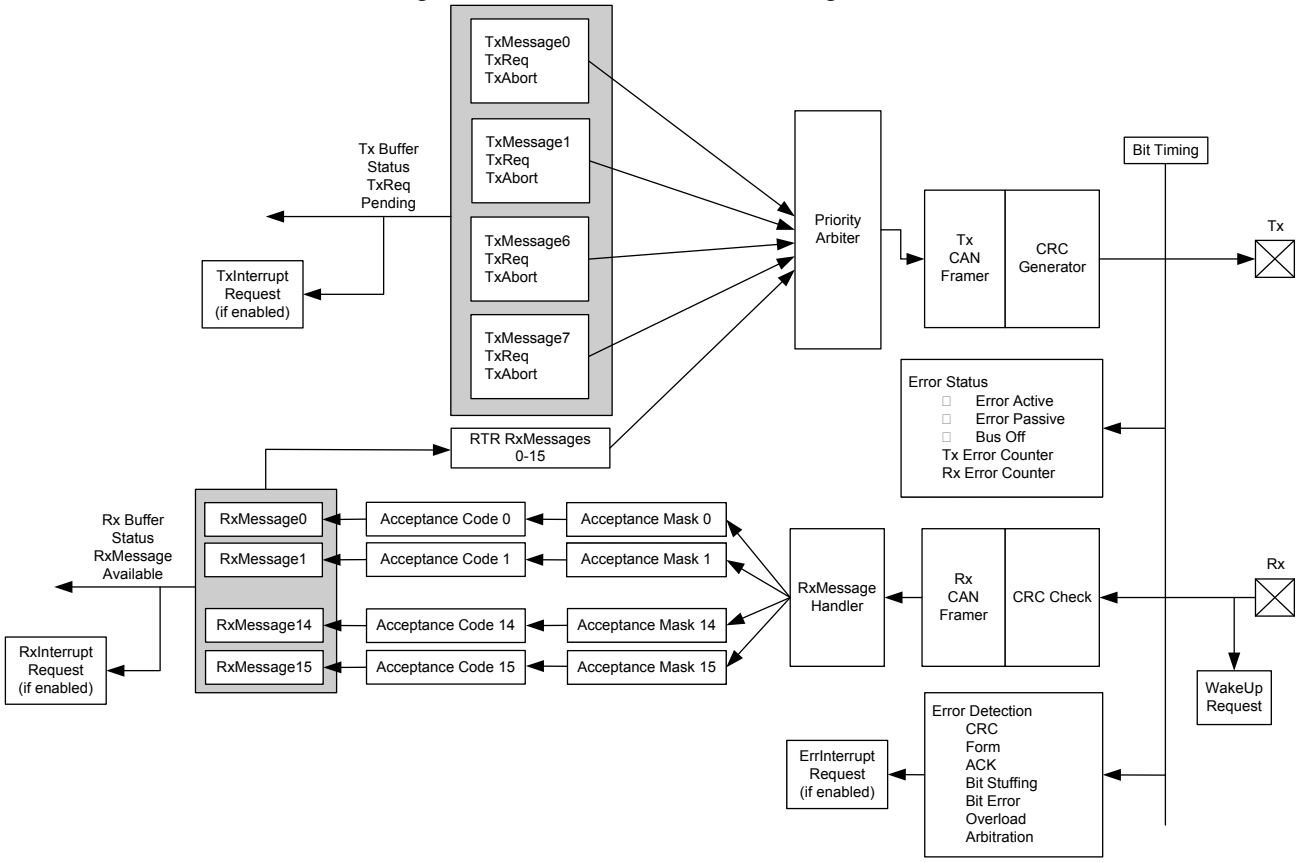

7.6 USB

PSoC includes a dedicated FS (12 Mbps) USB 2.0 transceiver supporting all four USB transfer types: control, interrupt, bulk, and isochronous. PSoC Creator provides full configuration support. USB interfaces to hosts through two dedicated USBIO pins, which are detailed in the "I/O System and Routing" section on page 28.

USB includes the following features:

- Eight unidirectional data endpoints
- One bidirectional control endpoint 0 (EP0)
- Shared 512-byte buffer for the eight data endpoints
- Dedicated 8-byte buffer for EP0
- Three memory modes
  - Manual Memory Management with No DMA Access
  - Manual Memory Management with Manual DMA Access
  - Automatic Memory Management with Automatic DMA Access
- Internal 3.3 V regulator for transceiver
- Internal 48 MHz oscillator that auto locks to USB bus clock, requiring no external crystal for USB (USB equipped parts only)
- Interrupts on bus and each endpoint event, with device wakeup
- USB Reset, Suspend, and Resume operations
- Bus powered and self powered modes

Figure 7-16. USB

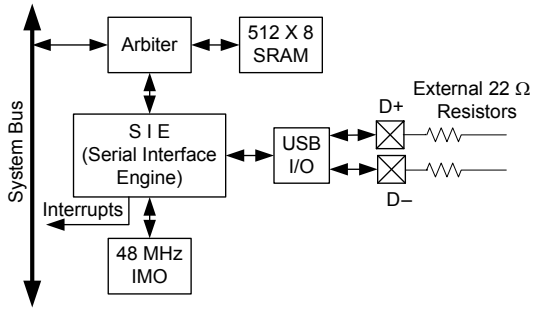

7.7 Timers, Counters, and PWMs

The Timer/Counter/PWM peripheral is a 16-bit dedicated peripheral providing three of the most common embedded peripheral features. As almost all embedded systems use some combination of timers, counters, and PWMs. Four of them have been included on this PSoC device family. Additional and more advanced functionality timers, counters, and PWMs can also be instantiated in Universal Digital Blocks (UDBs) as required. PSoC Creator allows you to choose the timer, counter, and PWM features that they require. The tool set utilizes the most optimal resources available.

The Timer/Counter/PWM peripheral can select from multiple clock sources, with input and output signals connected through the DSI routing. DSI routing allows input and output connections to any device pin and any internal digital signal accessible through the DSI. Each of the four instances has a compare output, terminal count output (optional complementary compare output), and programmable interrupt request line. The Timer/Counter/PWMs are configurable as free running, one shot, or Enable input controlled. The peripheral has timer reset and capture inputs, and a kill input for control of the comparator outputs. The peripheral supports full 16-bit capture.

Timer/Counter/PWM features include:

- 16-bit Timer/Counter/PWM (down count only)
- Selectable clock source
- PWM comparator (configurable for LT, LTE, EQ, GTE, GT)
- Period reload on start, reset, and terminal count
- Interrupt on terminal count, compare true, or capture
- Dynamic counter reads
- Timer capture mode
- Count while enable signal is asserted mode
- Free run mode
- One Shot mode (stop at end of period)
- Complementary PWM outputs with deadband
- PWM output kill

Figure 7-17. Timer/Counter/PWM

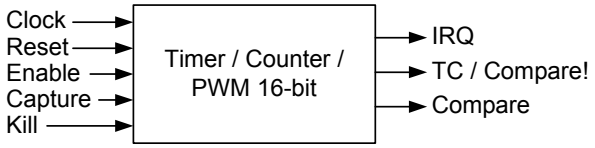

7.8 I²C

The I²C peripheral provides a synchronous two wire interface designed to interface the PSoC device with a two wire I²C serial communication bus. It is compatible[13] with I²C Standard-mode, Fast-mode, and Fast-mode Plus devices as defined in the NXP I2C-bus specification and user manual (UM10204). The I2C bus I/O may be implemented with GPIO or SIO in open-drain modes. Additional I²C interfaces can be instantiated using Universal Digital Blocks (UDBs) in PSoC Creator, as required.

To eliminate the need for excessive CPU intervention and overhead, I²C specific support is provided for status detection and generation of framing bits. I²C operates as a slave, a master, or multimaster (Slave and Master). In slave mode, the unit always listens for a start condition to begin sending or receiving data. Master mode supplies the ability to generate the Start and Stop conditions and initiate transactions. Multimaster mode provides clock synchronization and arbitration to allow multiple masters on the same bus. If Master mode is enabled and Slave mode is not enabled, the block does not generate interrupts on externally generated Start conditions. I²C interfaces through the DSI routing and allows direct connections to any GPIO or SIO pins.

I²C provides hardware address detect of a 7-bit address without CPU intervention. Additionally the device can wake from low power modes on a 7-bit hardware address match. If wakeup functionality is required, I²C pin connections are limited to the two special sets of SIO pins.

I²C features include:

- Slave and master, transmitter, and receiver operation
- Byte processing for low CPU overhead
- Interrupt or polling CPU interface
- Support for bus speeds up to 1 Mbps
- 7 or 10-bit addressing (10-bit addressing requires firmware support)
- SMBus operation (through firmware support - SMBus supported in hardware in UDBs)
- 7-bit hardware address compare
- Wake from low power modes on address match
- Glitch filtering (active and alternate-active modes only)

Data transfers follow the format shown in Figure 7-18. After the START condition (S), a slave address is sent. This address is 7 bits long followed by an eighth bit which is a data direction bit (R/W) - a 'zero' indicates a transmission (WRITE), a 'one' indicates a request for data (READ). A data transfer is always terminated by a STOP condition (P) generated by the master. However, if a master still wishes to communicate on the bus, it can generate a repeated START condition (Sr) and address another slave without first generating a STOP condition. Various combinations of read/write formats are then possible within such a transfer.

Note

13. The I²C peripheral is non-compliant with the NXP I²C specification in the following areas: analog glitch filter, I/O V_{OL}/I_{OL}, I/O hysteresis. The I²C Block has a digital glitch filter (not available in sleep mode). The Fast-mode minimum fall-time specification can be met by setting the I/Os to slow speed mode. See the I/O Electrical Specifications in "Inputs and Outputs" section on page 69 for details.

Figure 7-18. I²C Complete Transfer Timing

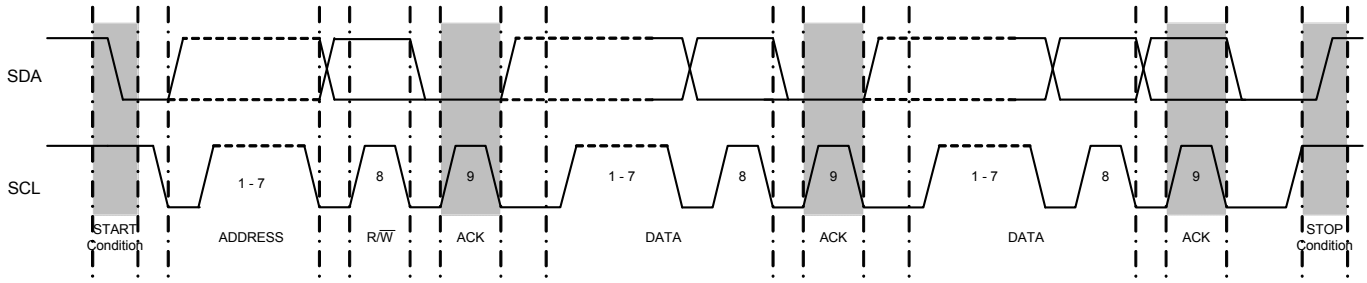

7.9 Digital Filter Block

Some devices in the CY8C56LP family of devices have a dedicated HW accelerator block used for digital filtering. The DFB has a dedicated multiplier and accumulator that calculates a 24-bit by 24-bit multiply accumulate in one system clock cycle. This enables the mapping of a direct form FIR filter that approaches a computation rate of one FIR tap for each clock cycle. The MCU can implement any of the functions performed by this block, but at a slower rate that consumes significant MCU bandwidth.

The PSoC Creator interface provides a wizard to implement FIR and IIR digital filters with coefficients for LPF, BPF, HPF, Notch and arbitrary shape filters. 64 pairs of data and coefficients are stored. This enables a 64 tap FIR filter or up to 4 16 tap filters of either FIR or IIR formulation.

Figure 7-19. DFB Application Diagram (pwr/gnd not shown)

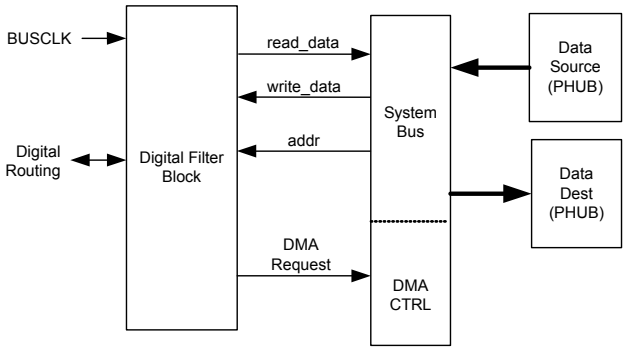

The typical use model is for data to be supplied to the DFB over the system bus from another on-chip system data source such as an ADC. The data typically passes through main memory or is directly transferred from another chip resource through DMA.

The DFB processes this data and passes the result to another on chip resource such as a DAC or main memory through DMA on the system bus.

Data movement in or out of the DFB is typically controlled by the system DMA controller but can be moved directly by the MCU.

8. Analog Subsystem

The analog programmable system creates application specific combinations of both standard and advanced analog signal processing blocks. These blocks are then interconnected to each other and also to any pin on the device, providing a high level of design flexibility and IP security. The features of the analog subsystem are outlined here to provide an overview of capabilities and architecture.

- Flexible, configurable analog routing architecture provided by analog globals, analog mux bus, and analog local buses
- High resolution Delta-Sigma ADC
- Two successive approximation (SAR) ADCs
- Four 8-bit DACs that provide either voltage or current output
- Four comparators with optional connection to configurable LUT outputs
- Four configurable switched capacitor/continuos time (SC/CT) blocks for functions that include opamp, unity gain buffer, programmable gain amplifier, transimpedance amplifier, and mixer
- Four opamps for internal use and connection to GPIO that can be used as high current output buffers
- CapSense subsystem to enable capacitive touch sensing
- Precision reference for generating an accurate analog voltage for internal analog blocks

Figure 8-1. Analog Subsystem Block Diagram

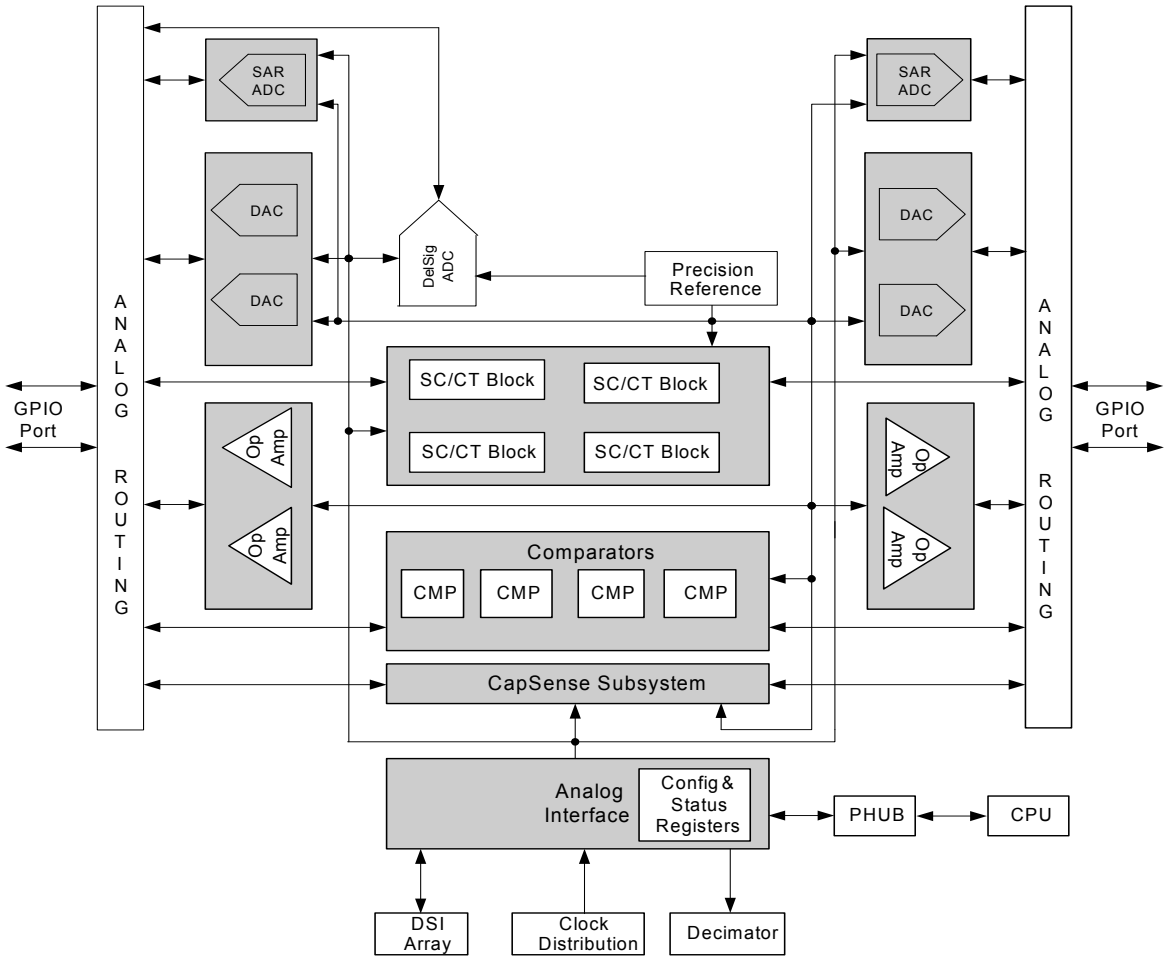

The PSoC Creator software program provides a user friendly interface to configure the analog connections between the GPIO and various analog resources and also connections from one analog resource to another. PSoC Creator also provides component libraries that allow you to configure the various analog blocks to perform application specific functions (PGA, transimpedance amplifier, voltage DAC, current DAC, and so on). The tool also generates API interface libraries that allow you to write firmware that allows the communication between the analog peripheral and CPU/Memory.

8.1 Analog Routing

The PSoC 5LP family of devices has a flexible analog routing architecture that provides the capability to connect GPIOs and different analog blocks, and also route signals between different analog blocks. One of the strong points of this flexible routing architecture is that it allows dynamic routing of input and output connections to the different analog blocks.

For information on how to make pin selections for optimal analog routing, refer to the application note, AN58304 - PSoC® 3 and PSoC® 5 - Pin Selection for Analog Designs.

8.1.1 Features

- Flexible, configurable analog routing architecture
- 16 Analog globals (AG) and two analog mux buses (AMUXBUS) to connect GPIOs and the analog blocks
- Each GPIO is connected to one analog global and one analog mux bus
- 8 Analog local buses (abus) to route signals between the different analog blocks
- Multiplexers and switches for input and output selection of the analog blocks

8.1.2 Functional Description

Analog globals (AGs) and analog mux buses (AMUXBUS) provide analog connectivity between GPIOs and the various analog blocks. There are 16 AGs in the PSoC 5LP family. The analog routing architecture is divided into four quadrants as shown in Figure 8-2. Each quadrant has four analog globals (AGL[0..3], AGL[4..7], AGR[0..3], AGR[4..7]). Each GPIO is connected to the corresponding AG through an analog switch. The analog mux bus is a shared routing resource that connects to every GPIO through an analog switch. There are two AMUXBUS routes in PSoC 5LP, one in the left half (AMUXBUSL) and one in the right half (AMUXBUSR), as shown in Figure 8-2.

Analog local buses (abus) are routing resources located within the analog subsystem and are used to route signals between different analog blocks. There are eight abus routes in PSoC 5LP, four in the left half (abusl [0:3]) and four in the right half (abusr [0:3]) as shown in Figure 8-2. Using the abus saves the analog globals and analog mux buses from being used for interconnecting the analog blocks.

Multiplexers and switches exist on the various buses to direct signals into and out of the analog blocks. A multiplexer can have only one connection on at a time, whereas a switch can have multiple connections on simultaneously. In Figure 8-2, multiplexers are indicated by grayed ovals and switches are indicated by transparent ovals.

Figure 8-2. CY8C56LP Analog Interconnect

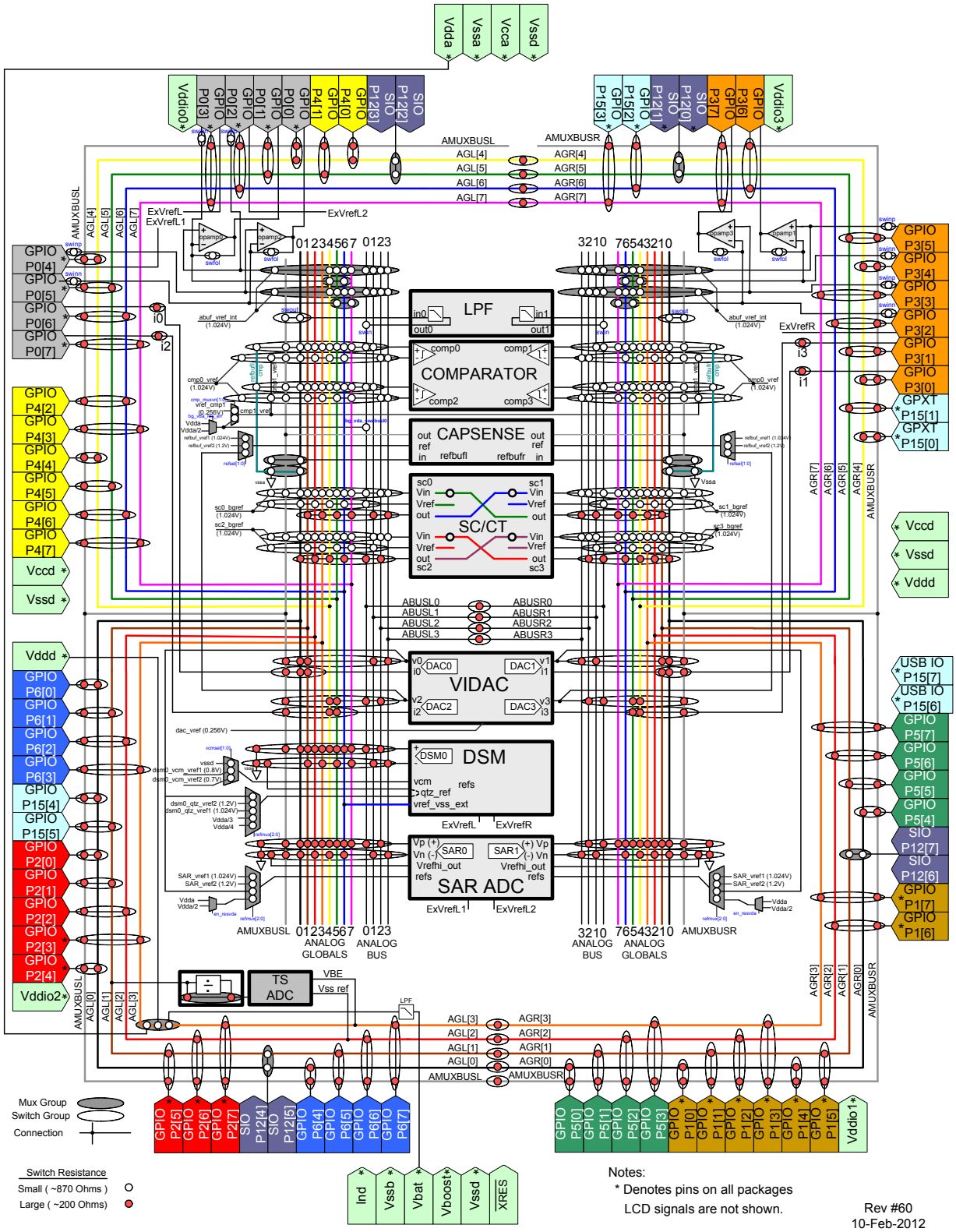

To preserve detail of this image, this image is best viewed with a PDF display program or printed on 11" × 17" paper.

8.2 Delta-sigma ADC

Some CY8C36 devices offer a delta-sigma ADC. This ADC offers differential input, high resolution and excellent linearity, making it a good ADC choice for measurement applications. The converter can be configured to output 12-bit resolution at data rates of up to 192 ksps. At a fixed clock rate, resolution can be traded for faster data rates as shown in Table 8-1 and Figure 8-3.

Table 8-1. Delta-sigma ADC Performance

Bits	Maximum Sample Rate (sps)	SINAD (dB)
12	192 k	66
8	384 k	43

Figure 8-3. Delta-sigma ADC Sample Rates, Range = ±1.024 V

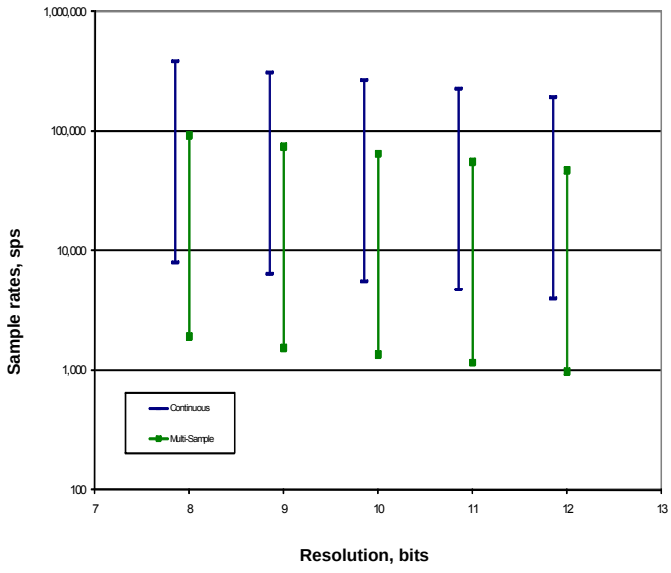

8.2.1 Functional Description

The ADC connects and configures three basic components, input buffer, delta-sigma modulator, and decimator. The basic block diagram is shown in Figure 8-4. The signal from the input muxes is delivered to the delta-sigma modulator either directly or through the input buffer. The delta-sigma modulator performs the actual analog to digital conversion. The modulator over-samples the input and generates a serial data stream output. This high speed data stream is not useful for most applications without some type of post processing, and so is passed to the decimator through the Analog Interface block. The decimator converts the high speed serial data stream into parallel ADC results. The modulator/decimator frequency response is $[(\sin x)/x]^4$.

Figure 8-4. Delta-sigma ADC Block Diagram

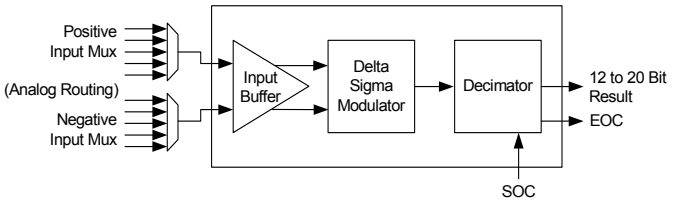

Resolution and sample rate are controlled by the Decimator. Data is pipelined in the decimator; the output is a function of the last four samples. When the input multiplexer is switched, the output data is not valid until after the fourth sample after the switch.

8.2.2 Operational Modes

The ADC can be configured by the user to operate in one of four modes: Single Sample, Multi Sample, Continuous, or Multi Sample (Turbo). All four modes are started by either a write to the start bit in a control register or an assertion of the Start of Conversion (SoC) signal. When the conversion is complete, a status bit is set and the output signal End of Conversion (EoC) asserts high and remains high until the value is read by either the DMA controller or the CPU.

8.2.2.1 Single Sample

In Single Sample mode, the ADC performs one sample conversion on a trigger. In this mode, the ADC stays in standby state waiting for the SoC signal to be asserted. When SoC is signaled the ADC performs four successive conversions. The first three conversions prime the decimator. The ADC result is valid and available after the fourth conversion, at which time the EoC signal is generated. To detect the end of conversion, the system may poll a control register for status or configure the external EoC signal to generate an interrupt or invoke a DMA request. When the transfer is done the ADC reenters the standby state where it stays until another SoC event.

8.2.2.2 Continuous

Continuous sample mode is used to take multiple successive samples of a single input signal. Multiplexing multiple inputs should not be done with this mode. There is a latency of three conversion times before the first conversion result is available. This is the time required to prime the decimator. After the first result, successive conversions are available at the selected sample rate.

8.2.2.3 Multi Sample

Multi sample mode is similar to continuous mode except that the ADC is reset between samples. This mode is useful when the input is switched between multiple signals. The decimator is re-primed between each sample so that previous samples do not affect the current conversion. Upon completion of a sample, the next sample is automatically initiated. The results can be transferred using either firmware polling, interrupt, or DMA.

More information on output formats is provided in the Technical Reference Manual.

8.2.3 Start of Conversion Input

The SoC signal is used to start an ADC conversion. A digital clock or UDB output can be used to drive this input. It can be used when the sampling period must be longer than the ADC conversion time or when the ADC must be synchronized to other hardware. This signal is optional and does not need to be connected if ADC is running in a continuous mode.

8.2.4 End of Conversion Output

The EoC signal goes high at the end of each ADC conversion. This signal may be used to trigger either an interrupt or DMA request.

8.3 Successive Approximation ADCs

The CY8C56LP family of devices has one or two Successive Approximation (SAR) ADCs, depending on device selected. These ADCs are 12-bit at up to 1 Msps, with single-ended or differential inputs, making them useful for a wide variety of sampling and control applications.

8.3.1 Functional Description

In a SAR ADC an analog input signal is sampled and compared with the output of a DAC. A binary search algorithm is applied to the DAC and used to determine the output bits in succession from MSB to LSB. A block diagram of one SAR ADC is shown in Figure 8-5.

Figure 8-5. SAR ADC Block Diagram

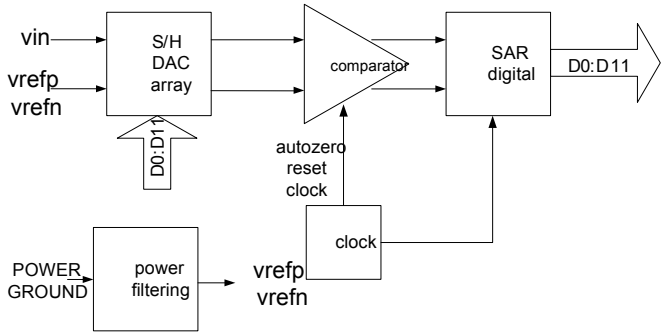

The input is connected to the analog globals and muxes. The frequency of the clock is 18 times the sample rate; the clock rate ranges from 1 to 18 MHz.

8.3.2 Conversion Signals

Writing a start bit or assertion of a Start of Frame (SOF) signal is used to start a conversion. SOF can be used in applications where the sampling period is longer than the conversion time, or when the ADC needs to be synchronized to other hardware. This signal is optional and does not need to be connected if the SAR ADC is running in a continuous mode. A digital clock or UDB output can be used to drive this input. When the SAR is first powered up or awakened from any of the sleeping modes, there is a power up wait time of 10 µs before it is ready to start the first conversion.

When the conversion is complete, a status bit is set and the output signal End of Frame (EOF) asserts and remains asserted until the value is read by either the DMA controller or the CPU. The EOF signal may be used to trigger an interrupt or a DMA request.

8.3.3 Operational Modes

A ONE_SHOT control bit is used to set the SAR ADC conversion mode to either continuous or one conversion per SOF signal. DMA transfer of continuous samples, without CPU intervention, is supported.

8.4 Comparators

The CY8C56LP family of devices contains four comparators. Comparators have these features:

- Input offset factory trimmed to less than 5 mV
- Rail-to-rail common mode input range (V_{SSA} to V_{DDA})
- Speed and power can be traded off by using one of three modes: fast, slow, or ultra low power
- Comparator outputs can be routed to look up tables to perform simple logic functions and then can also be routed to digital blocks
- The positive input of the comparators may be optionally passed through a low pass filter. Two filters are provided
- Comparator inputs can be connections to GPIO, DAC outputs and SC block outputs

8.4.1 Input and Output Interface

The positive and negative inputs to the comparators come from the analog global buses, the analog mux line, the analog local bus and precision reference through multiplexers. The output from each comparator could be routed to any of the two input LUTs. The output of that LUT is routed to the UDB Digital System Interface.

Figure 8-6. Analog Comparator

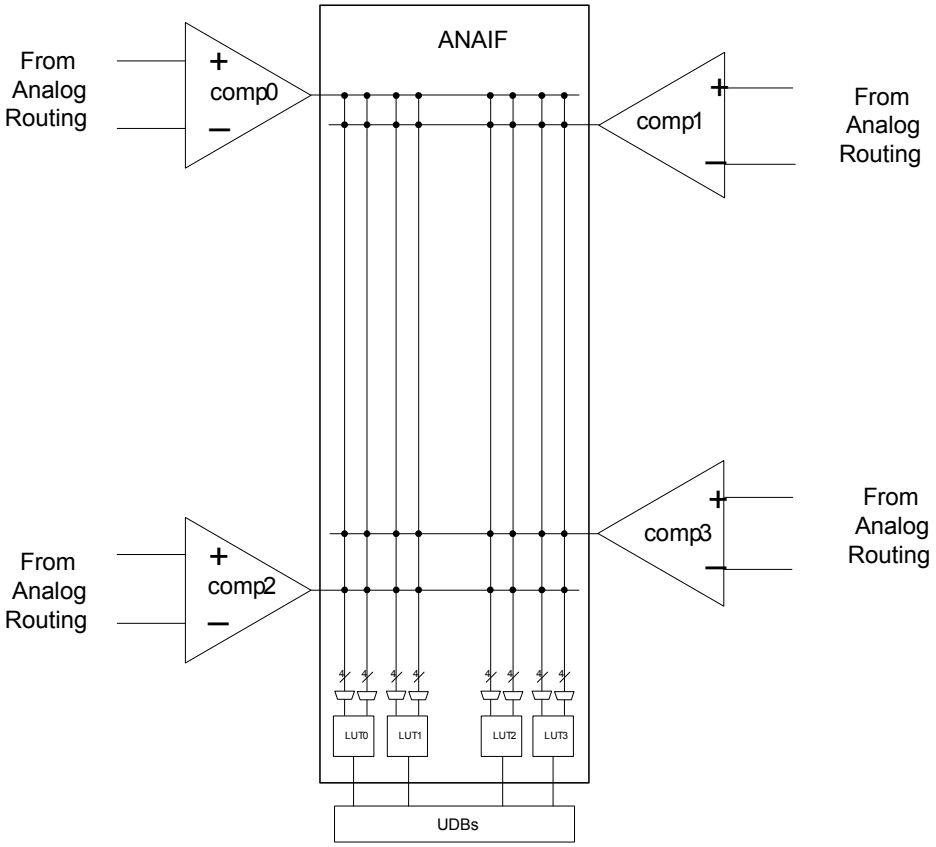

8.4.2 LUT

The CY8C56LP family of devices contains four LUTs. The LUT is a two input, one output lookup table that is driven by any one or two of the comparators in the chip. The output of any LUT is routed to the digital system interface of the UDB array. From the digital system interface of the UDB array, these signals can be connected to UDBs, DMA controller, I/O, or the interrupt controller.

The LUT control word written to a register sets the logic function on the output. The available LUT functions and the associated control word is shown in Table 8-2.

Table 8-2. LUT Function vs. Program Word and Inputs

Control Word	Output (A and B are LUT inputs)
0000b	**FALSE** (‘0’)
0001b	**A** AND **B**
0010b	**A** AND (NOT **B**)
0011b	A
0100b	(NOT **A**) AND **B**
0101b	B
0110b	**A** XOR **B**
0111b	**A** OR **B**
1000b	**A** NOR **B**
1001b	**A** XNOR **B**
1010b	NOT **B**
1011b	**A** OR (NOT **B**)
1100b	NOT **A**
1101b	(NOT **A**) OR **B**
1110b	**A** NAND **B**
1111b	**TRUE** (‘1’)

8.5 Opamps

The CY8C56LP family of devices contain four general purpose opamps.

Figure 8-7. Opamp

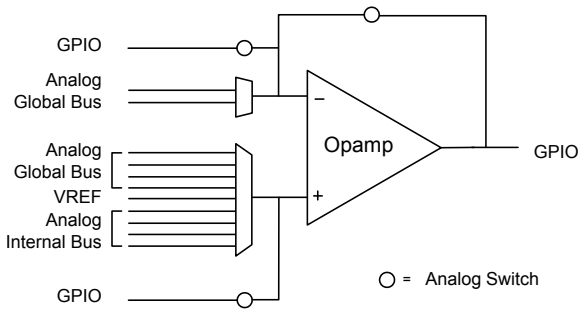

The opamp is uncommitted and can be configured as a gain stage or voltage follower on external or internal signals.

See Figure 8-8. In any configuration, the input and output signals can all be connected to the internal global signals and monitored with an ADC, or comparator. The configurations are implemented with switches between the signals and GPIO pins.

Figure 8-8. Opamp Configurations

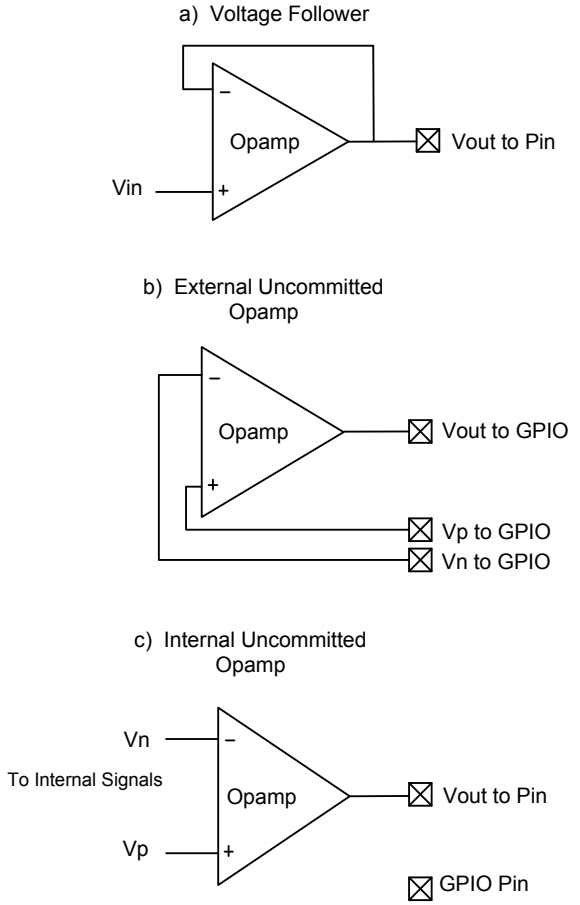

The opamp has three speed modes, slow, medium, and fast. The slow mode consumes the least amount of quiescent power and the fast mode consumes the most power. The inputs are able to swing rail-to-rail. The output swing is capable of rail-to-rail operation at low current output, within 50 mV of the rails. When driving high current loads (about 25 mA) the output voltage may only get within 500 mV of the rails.

8.6 Programmable SC/CT Blocks

The CY8C56LP family of devices contains four switched capacitor/continuous time (SC/CT) blocks. Each switched capacitor/continuous time block is built around a single rail-to-rail high bandwidth opamp.

Switched capacitor is a circuit design technique that uses capacitors plus switches instead of resistors to create analog functions. These circuits work by moving charge between capacitors by opening and closing different switches. Nonoverlapping in phase clock signals control the switches, so that not all switches are ON simultaneously.

The PSoC Creator tool offers a user friendly interface, which allows you to easily program the SC/CT blocks. Switch control and clock phase control configuration is done by PSoC Creator so users only need to determine the application use parameters such as gain, amplifier polarity, V_{REF} connection, and so on.

The same opamps and block interfaces are also connectable to an array of resistors which allows the construction of a variety of continuous time functions.

The opamp and resistor array is programmable to perform various analog functions including

- Naked Operational Amplifier - Continuous Mode
- Unity-Gain Buffer - Continuous Mode
- Programmable Gain Amplifier (PGA) - Continuous Mode
- Transimpedance Amplifier (TIA) - Continuous Mode
- Up/Down Mixer - Continuous Mode
- Sample and Hold Mixer (NRZ S/H) - Switched Cap Mode
- First Order Analog to Digital Modulator - Switched Cap Mode

8.6.1 Naked Opamp

The Naked Opamp presents both inputs and the output for connection to internal or external signals. The opamp has a unity gain bandwidth greater than 6.0 MHz and output drive current up to 650 µA. This is sufficient for buffering internal signals (such as DAC outputs) and driving external loads greater than 7.5 kohms.

8.6.2 Unity Gain

The Unity Gain buffer is a Naked Opamp with the output directly connected to the inverting input for a gain of 1.00. It has a -3 dB bandwidth greater than 6.0 MHz.

8.6.3 PGA

The PGA amplifies an external or internal signal. The PGA can be configured to operate in inverting mode or noninverting mode. The PGA function may be configured for both positive and negative gains as high as 50 and 49 respectively. The gain is adjusted by changing the values of R1 and R2 as illustrated in Figure 8-9. The schematic in Figure 8-9 shows the configuration and possible resistor settings for the PGA. The gain is switched from inverting and non inverting by changing the shared select value of the both the input muxes. The bandwidth for each gain case is listed in Table 8-3.

Table 8-3. Bandwidth

Gain	Bandwidth
1	6.0 MHz
24	340 kHz
48	220 kHz
50	215 kHz

Figure 8-9. PGA Resistor Settings

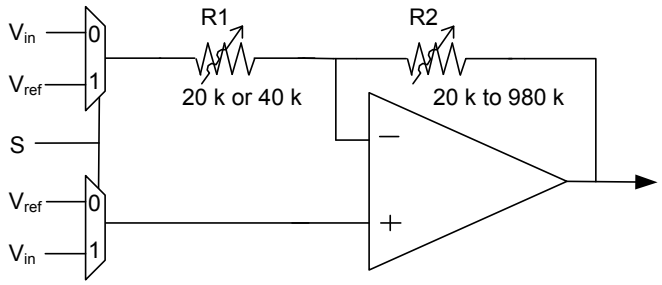

The PGA is used in applications where the input signal may not be large enough to achieve the desired resolution in the ADC, or dynamic range of another SC/CT block such as a mixer. The gain is adjustable at runtime, including changing the gain of the PGA prior to each ADC sample.

8.6.4 TIA

The Transimpedance Amplifier (TIA) converts an internal or external current to an output voltage. The TIA uses an internal feedback resistor in a continuous time configuration to convert input current to output voltage. For an input current I_{in}, the output voltage is V_{REF} - I_{in} x R_{fb}, where V_{REF} is the value placed on the non inverting input. The feedback resistor Rfb is programmable between 20 KΩ and 1 MΩ through a configuration register. Table 8-4 shows the possible values of Rfb and associated configuration settings.

Table 8-4. Feedback Resistor Settings

Configuration Word	Nominal R_{fb} (KΩ)
000b	20
001b	30
010b	40
011b	60
100b	120
101b	250
110b	500
111b	1000

Figure 8-10. Continuous Time TIA Schematic

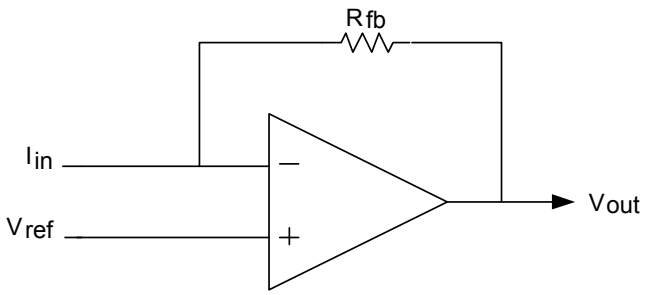

The TIA configuration is used for applications where an external sensor's output is current as a function of some type of stimulus such as temperature, light, magnetic flux etc. In a common application, the voltage DAC output can be connected to the V_{REF} TIA input to allow calibration of the external sensor bias current by adjusting the voltage DAC output voltage.

8.7 LCD Direct Drive

The PSoC Liquid Crystal Display (LCD) driver system is a highly configurable peripheral designed to allow PSoC to directly drive a broad range of LCD glass. All voltages are generated on chip, eliminating the need for external components. With a high multiplex ratio of up to 1/16, the CY8C56LP family LCD driver system can drive a maximum of 736 segments. The PSoC LCD driver module was also designed with the conservative power budget of portable devices in mind, enabling different LCD drive modes and power down modes to conserve power.

PSoC Creator provides an LCD segment drive component. The component wizard provides easy and flexible configuration of LCD resources. You can specify pins for segments and commons along with other options. The software configures the device to meet the required specifications. This is possible because of the programmability inherent to PSoC devices.

Key features of the PSoC LCD segment system are:

- LCD panel direct driving
- Type A (standard) and Type B (low power) waveform support
- Wide operating voltage range support (2 V to 5 V) for LCD panels
- Static, 1/2, 1/3, 1/4, 1/5 bias voltage levels
- Internal bias voltage generation through internal resistor ladder
- Up to 62 total common and segment outputs
- Up to 1/16 multiplex for a maximum of 16 backplane/common outputs
- Up to 62 front plane/segment outputs for direct drive
- Drives up to 736 total segments (16 backplane x 46 front plane)
- Up to 64 levels of software controlled contrast
- Ability to move display data from memory buffer to LCD driver through DMA (without CPU intervention)
- Adjustable LCD refresh rate from 10 Hz to 150 Hz
- Ability to invert LCD display for negative image
- Three LCD driver drive modes, allowing power optimization

Figure 8-11. LCD System

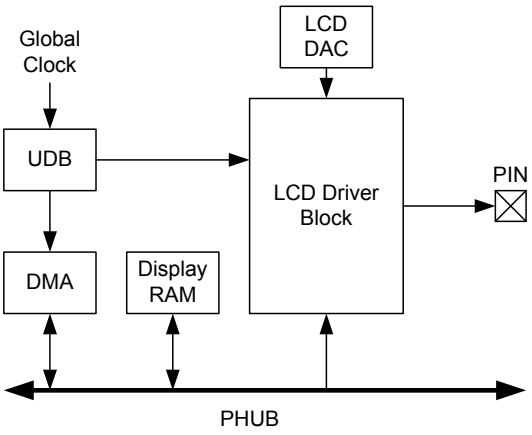

8.7.1 LCD Segment Pin Driver

Each GPIO pin contains an LCD driver circuit. The LCD driver buffers the appropriate output of the LCD DAC to directly drive the glass of the LCD. A register setting determines whether the pin is a common or segment. The pin's LCD driver then selects one of the six bias voltages to drive the I/O pin, as appropriate for the display data.

8.7.2 Display Data Flow

The LCD segment driver system reads display data and generates the proper output voltages to the LCD glass to produce the desired image. Display data resides in a memory buffer in the system SRAM. Each time you need to change the common and segment driver voltages, the next set of pixel data moves from the memory buffer into the Port Data Registers via DMA.

8.7.3 UDB and LCD Segment Control

A UDB is configured to generate the global LCD control signals and clocking. This set of signals is routed to each LCD pin driver through a set of dedicated LCD global routing channels. In addition to generating the global LCD control signals, the UDB also produces a DMA request to initiate the transfer of the next frame of LCD data.

8.7.4 LCD DAC

The LCD DAC generates the contrast control and bias voltage for the LCD system. The LCD DAC produces up to five LCD drive voltages plus ground, based on the selected bias ratio. The bias voltages are driven out to GPIO pins on a dedicated LCD bias bus, as required.

8.8 CapSense

The CapSense system provides a versatile and efficient means for measuring capacitance in applications such as touch sense buttons, sliders, proximity detection, etc. The CapSense system uses a configuration of system resources, including a few hardware functions primarily targeted for CapSense. Specific resource usage is detailed in the CapSense component in PSoC Creator.

A capacitive sensing method using a delta-sigma modulator (CSD) is used. It provides capacitance sensing using a switched capacitor technique with a delta-sigma modulator to convert the sensing current to a digital code.

8.9 Temp Sensor

Die temperature is used to establish programming parameters for writing flash. Die temperature is measured using a dedicated sensor based on a forward biased transistor. The temperature sensor has its own auxiliary ADC.

8.10 DAC

The CY8C56LP parts contain four Digital to Analog Convertors (DACs). Each DAC is 8-bit and can be configured for either voltage or current output. The DACs support CapSense, power supply regulation, and waveform generation. Each DAC has the following features.

- Adjustable voltage or current output in 255 steps
- Programmable step size (range selection)
- Eight bits of calibration to correct ± 25% of gain error
- Source and sink option for current output
- 8 Msps conversion rate for current output
- 1 Msps conversion rate for voltage output
- Monotonic in nature
- Data and strobe inputs can be provided by the CPU or DMA, or routed directly from the DSI
- Dedicated low-resistance output pin for high-current mode

Figure 8-12. DAC Block Diagram

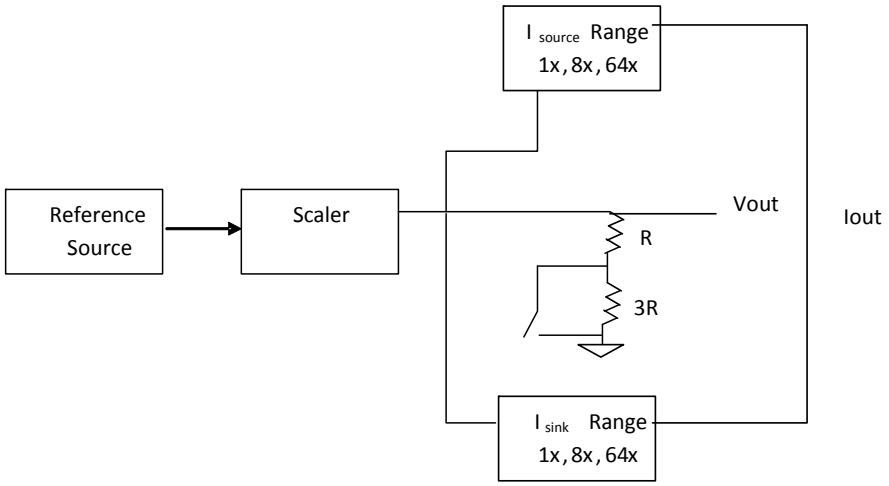

8.10.1 Current DAC

The current DAC (IDAC) can be configured for the ranges 0 to 31.875 µA, 0 to 255 µA, and 0 to 2.04 mA. The IDAC can be configured to source or sink current.

8.10.2 Voltage DAC

For the voltage DAC (VDAC), the current DAC output is routed through resistors. The two ranges available for the VDAC are 0 to 1.02 V and 0 to 4.08 V. In voltage mode any load connected to the output of a DAC should be purely capacitive (the output of the VDAC is not buffered).

8.11 Up/Down Mixer

In continuous time mode, the SC/CT block components are used to build an up or down mixer. Any mixing application contains an input signal frequency and a local oscillator frequency. The polarity of the clock, Fclk, switches the amplifier between inverting or noninverting gain. The output is the product of the input and the switching function from the local oscillator, with frequency components at the local oscillator plus and minus the signal frequency (Fclk + Fin and Fclk - Fin) and reduced-level frequency components at odd integer multiples of the local oscillator frequency. The local oscillator frequency is provided by the selected clock source for the mixer.

Continuous time up and down mixing works for applications with input signals and local oscillator frequencies up to 1 MHz.

Figure 8-13. Mixer Configuration

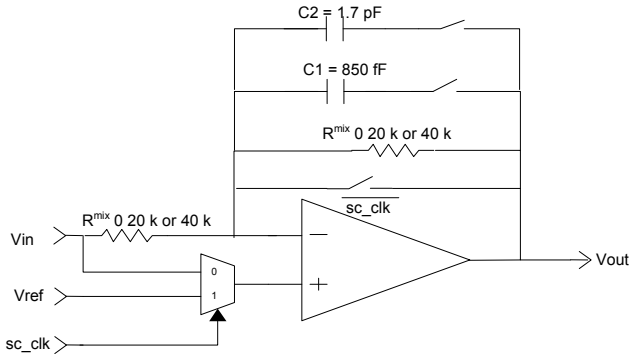

8.12 Sample and Hold

The main application for a sample and hold, is to hold a value stable while an ADC is performing a conversion. Some applications require multiple signals to be sampled simultaneously, such as for power calculations (V and I). PSoC Creator offers a sample and hold component to support this function.

Figure 8-14. Sample and Hold Topology (Φ1 and Φ2 are opposite phases of a clock)

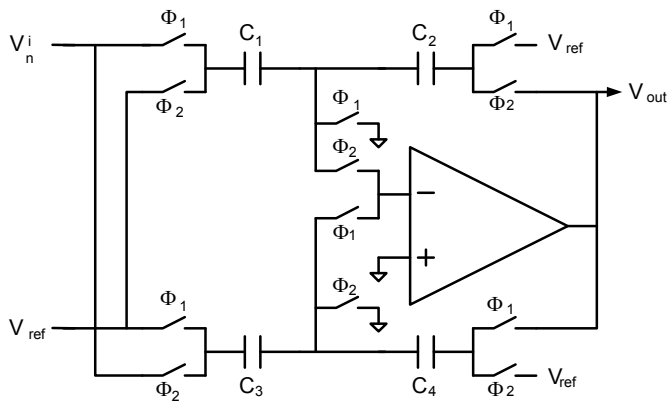

8.12.1 Down Mixer

The S+H can be used as a mixer to down convert an input signal. This circuit is a high bandwidth passive sample network that can sample input signals up to 14 MHz. This sampled value is then held using the opamp with a maximum clock rate of 4 MHz. The output frequency is at the difference between the input frequency and the highest integer multiple of the Local Oscillator that is less than the input.

8.12.2 First Order Modulator - SC Mode

A first order modulator is constructed by placing the switched capacitor block in an integrator mode and using a comparator to provide a 1-bit feedback to the input. Depending on this bit, a reference voltage is either subtracted or added to the input signal. The block output is the output of the comparator and not the integrator in the modulator case. The signal is downshifted and buffered and then processed by a decimator to make a delta-sigma converter or a counter to make an incremental converter. The accuracy of the sampled data from the first-order modulator is determined from several factors.

The main application for this modulator is for a low frequency ADC with high accuracy. Applications include strain gauges, thermocouples, precision voltage, and current measurement

9. Programming, Debug Interfaces, Resources

The Cortex-M3 has internal debugging components, tightly integrated with the CPU, providing the following features:

- JTAG or SWD access
- Flash Patch and Breakpoint (FPB) block for implementing breakpoints and code patches
- Data Watchpoint and Trigger (DWT) block for implementing watchpoints, trigger resources, and system profiling
- Embedded Trace Macrocell (ETM) for instruction trace
- Instrumentation Trace Macrocell (ITM) for support of printf-style debugging

PSoC devices include extensive support for programming, testing, debugging, and tracing both hardware and firmware. Four interfaces are available: JTAG, SWD, SWV, and TRACEPORT. JTAG and SWD support all programming and debug features of the device. JTAG also supports standard JTAG scan chains for board level test and chaining multiple JTAG devices to a single JTAG connection. The SWV and TRACEPORT provide trace output from the DWT, ETM, and ITM. TRACEPORT is faster but uses more pins. SWV is slower but uses only one pin.

For more information on PSoC 5 programming, refer to the application note PSoC 5 Device Programming Specifications.

Cortex-M3 debug and trace functionality enables full device debugging in the final system using the standard production device. It does not require special interfaces, debugging pods, simulators, or emulators. Only the standard programming connections are required to fully support debug.

The PSoC Creator IDE software provides fully integrated programming and debug support for PSoC devices. The low cost MiniProg3 programmer and debugger is designed to provide full programming and debug support of PSoC devices in conjunction with the PSoC Creator IDE. PSoC JTAG, SWD, and SWV interfaces are fully compatible with industry standard third party tools.

All Cortex-M3 debug and trace modules are disabled by default and can only be enabled in firmware. If not enabled, the only way to reenable them is to erase the entire device, clear flash protection, and reprogram the device with new firmware that enables them. Disabling debug and trace features, robust flash protection, and hiding custom analog and digital functionality inside the PSoC device provide a level of security not possible with multichip application solutions. Additionally, all device interfaces can be permanently disabled (Device Security) for applications concerned about phishing attacks due to a maliciously reprogrammed device. Permanently disabling interfaces is not recommended in most applications because the designer then cannot access the device later. Because all programming, debug, and test interfaces are disabled when Device Security is enabled, PSoCs with Device Security enabled may not be returned for failure analysis.

9.1 JTAG Interface

The IEEE 1149.1 compliant JTAG interface exists on four or five pins (the nTRST pin is optional). The JTAG clock frequency can be up to 12 MHz, or 1/3 of the CPU clock frequency for 8 and 16-bit transfers, or 1/5 of the CPU clock frequency for 32-bit transfers, whichever is least. By default, the JTAG pins are enabled on new devices but the JTAG interface can be disabled, allowing these pins to be used as General Purpose I/O (GPIO) instead. The JTAG interface is used for programming the flash memory, debugging, I/O scan chains, and JTAG device chaining.

Figure 9-1. JTAG Interface Connections between PSoC 5LP and Programmer

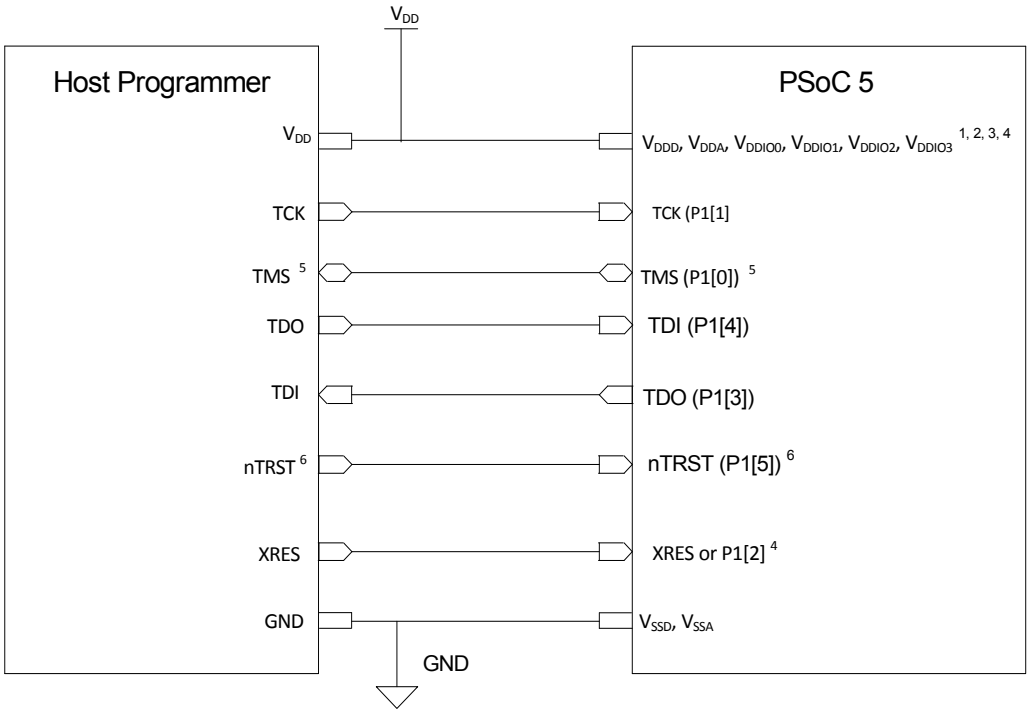

[1] The voltage levels of Host Programmer and the PSoC 5 voltage domains involved in Programming should be same. The Port 1 JTAG pins, XRES pin (XRES_N or P1[2]) are powered by V_{DDIO1}. So, V_{DDIO1} of PSoC 5 should be at same voltage level as host V_{DD}. Rest of PSoC 5 voltage domains (V_{DDD}, V_{DDA}, V_{DDIO0}, V_{DDIO2}, V_{DDIO3}) need not be at the same voltage level as host Programmer.

[2] Vdda must be greater than or equal to all other power supplies (Vddd, Vddio's) in PSoC 5.

[3] For Power cycle mode Programming, XRES pin is not required. But the Host programmer must have the capability to toggle power (Vddd, Vdda, All Vddio's) to PSoC 5. This may typically require external interface circuitry to toggle power which will depend on the programming setup. The power supplies can be brought up in any sequence, however, once stable, VDDA must be greater than or equal to all other supplies.

[4] For JTAG Programming, Device reset can also be done without connecting to the XRES pin or Power cycle mode by using the TMS,TCK,TDI, TDO pins of PSoC 5, and writing to a specific register. But this requires that the DPS setting in NVL is not equal to "Debug Ports Disabled".

[5] By default, PSoC 5 is configured for 4-wire JTAG mode unless user changes the DPS setting. So the TMS pin is unidirectional. But if the DPS setting is changed to non-JTAG mode, the TMS pin in JTAG is bi-directional as the SWD Protocol has to be used for acquiring the PSoC 5 device initially. After switching from SWD to JTAG mode, the TMS pin will be uni-directional. In such a case, unidirectional buffer should not be used on TMS line.

[6] nTRST JTAG pin (P1[5]) cannot be used to reset the JTAG TAP controlller during first time programming of PSoC 5 as the default setting is 4-wire JTAG (nTRST disabled). Use the TMS, TCK pins to do a reset of JTAG TAP controller.

9.2 SWD Interface

The SWD interface is the preferred alternative to the JTAG interface. It requires only two pins instead of the four or five needed by JTAG. SWD provides all of the programming and debugging features of JTAG at the same speed. SWD does not provide access to scan chains or device chaining. The SWD clock frequency can be up to 1/3 of the CPU clock frequency.

SWD uses two pins, either two of the JTAG pins (TMS and TCK) or the USBIO D+ and D- pins. The USBIO pins are useful for in system programming of USB solutions that would otherwise require a separate programming connector. One pin is used for the data clock and the other is used for data input and output.

SWD can be enabled on only one of the pin pairs at a time. This only happens if, within 8 µs (key window) after reset, that pin pair (JTAG or USB) receives a predetermined sequence of 1s and 0s. SWD is used for debugging or for programming the flash memory.

The SWD interface can be enabled from the JTAG interface or disabled, allowing its pins to be used as GPIO. Unlike JTAG, the SWD interface can always be reacquired on any device during the key window. It can then be used to reenable the JTAG interface, if desired. When using SWD or JTAG pins as standard GPIO, make sure that the GPIO functionality and PCB circuits do not interfere with SWD or JTAG use.

Figure 9-2. SWD Interface Connections between PSoC 5LP and Programmer

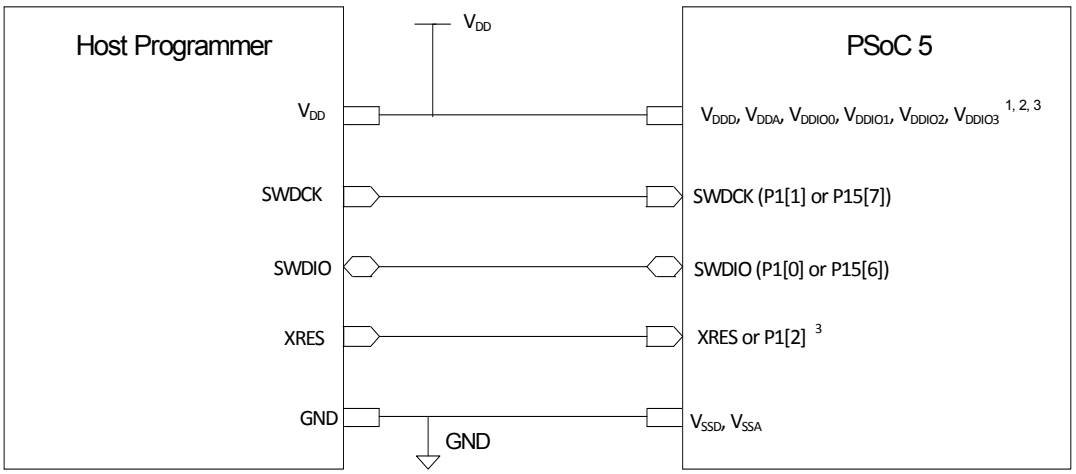

[1] The voltage levels of the Host Programmer and the PSoC 5 voltage domains involved in programming should be the same. XRES pin (XRES_N or P1[2]) is powered by V_{DDIO1}. The USB SWD pins are powered by V_{DDD}. So for Programming using the USB SWD pins with XRES pin, the V_{DDD}, V_{DDIO1} of PSoC 5 should be at the same voltage level as Host V_{DD}. Rest of PSoC 5 voltage domains (V_{DDA}, V_{DDIO0}, V_{DDIO2}, V_{DDIO3}) need not be at the same voltage level as host Programmer. The Port 1 SWD pins are powered by V_{DDIO1}. So V_{DDIO1} of PSoC 5 should be at same voltage level as host V_{DD} for Port 1 SWD programming. Rest of PSoC 5 voltage domains (V_{DDD}, V_{DDA}, V_{DDIO0}, V_{DDIO2}, V_{DDIO3}) need not be at the same voltage level as host Programmer.

[2] Vdda must be greater than or equal to all other power supplies (Vddd, Vddio's) in PSoC 5.

[3] For Power cycle mode Programming, XRES pin is not required. But the Host programmer must have the capability to toggle power (Vddd, Vdda, All Vddio's) to PSoC 5. This may typically require external interface circuitry to toggle power which will depend on the programming setup. The power supplies can be brought up in any sequence, however, once stable, VDDA must be greater than or equal to all other supplies.

9.3 Debug Features

The CY8C56LP supports the following debug features:

- Halt and single-step the CPU
- View and change CPU and peripheral registers, and RAM addresses
- Six program address breakpoints and two literal access breakpoints
- Data watchpoint events to CPU
- Patch and remap instruction from flash to SRAM
- Debugging at the full speed of the CPU
- Compatible with PSoC Creator and MiniProg3 programmer and debugger
- Standard JTAG programming and debugging interfaces make CY8C56LP compatible with other popular third-party tools (for example, ARM / Keil)

9.4 Trace Features

The following trace features are supported:

- Instruction trace
- Data watchpoint on access to data address, address range, or data value
- Trace trigger on data watchpoint
- Debug exception trigger
- Code profiling
- Counters for measuring clock cycles, folded instructions, load/store operations, sleep cycles, cycles per instruction, interrupt overhead
- Interrupt events trace
- Software event monitoring, “printf-style” debugging

9.5 SWV and TRACEPORT Interfaces

The SWV and TRACEPORT interfaces provide trace data to a debug host via the Cypress MiniProg3 or an external trace port analyzer. The 5 pin TRACEPORT is used for rapid transmission of large trace streams. The single pin SWV mode is used to minimize the number of trace pins. SWV is shared with a JTAG pin. If debugging and tracing are done at the same time then SWD may be used with either SWV or TRACEPORT, or JTAG may be used with TRACEPORT, as shown in Table 9-1.

Table 9-1. Debug Configurations

Debug and Trace Configuration	GPIO Pins Used
All debug and trace disabled	0
JTAG	4 or 5
SWD	2
SWV	1
TRACEPORT	5
JTAG + TRACEPORT	9 or 10
SWD + SWV	3
SWD + TRACEPORT	7

9.6 Programming Features

The JTAG and SWD interfaces provide full programming support. The entire device can be erased, programmed, and verified. Designers can increase flash protection levels to protect firmware IP. Flash protection can only be reset after a full device erase. Individual flash blocks can be erased, programmed, and verified, if block security settings permit.

9.7 Device Security

PSoC 5LP offers an advanced security feature called device security, which permanently disables all test, programming, and debug ports, protecting your application from external access. The device security is activated by programming a 32-bit key (0x50536F43) to a Write Once Latch (WOL).

The Write Once Latch is a type of nonvolatile latch (NVL). The cell itself is an NVL with additional logic wrapped around it. Each WOL device contains four bytes (32 bits) of data. The wrapper outputs a ‘1’ if a super-majority (28 of 32) of its bits match a pre-determined pattern (0x50536F43); it outputs a ‘0’ if this majority is not reached. When the output is 1, the Write Once NV latch locks the part out of Debug and Test modes; it also permanently gates off the ability to erase or alter the contents of the latch. Matching all bits is intentionally not required, so that single (or few) bit failures do not deassert the WOL output. The state of the NVL bits after wafer processing is truly random with no tendency toward 1 or 0.

The WOL only locks the part after the correct 32-bit key (0x50536F43) is loaded into the NVL's volatile memory, programmed into the NVL's nonvolatile cells, and the part is reset. The output of the WOL is only sampled on reset and used to disable the access. This precaution prevents anyone from reading, erasing, or altering the contents of the internal memory.

The user can write the key into the WOL to lock out external access only if no flash protection is set (see “Flash Security” section on page 16). However, after setting the values in the WOL, a user still has access to the part until it is reset. Therefore, a user can write the key into the WOL, program the flash protection data, and then reset the part to lock it.

If the device is protected with a WOL setting, Cypress cannot perform failure analysis and, therefore, cannot accept RMAs from customers. The WOL can be read out via Serial Wire Debug (SWD) port to electrically identify protected parts. The user can write the key in WOL to lock out external access only if no flash protection is set. For more information on how to take full advantage of the security features in PSoC see the PSoC 5 TRM.

Disclaimer

Note the following details of the flash code protection features on Cypress devices.

Cypress products meet the specifications contained in their particular Cypress datasheets. Cypress believes that its family of products is one of the most secure families of its kind on the market today, regardless of how they are used. There may be methods, unknown to Cypress, that can breach the code protection features. Any of these methods, to our knowledge, would be dishonest and possibly illegal. Neither Cypress nor any other semiconductor manufacturer can guarantee the security of their code. Code protection does not mean that we are guaranteeing the product as “unbreakable.”

Cypress is willing to work with the customer who is concerned about the integrity of their code. Code protection is constantly evolving. We at Cypress are committed to continuously improving the code protection features of our products.

10. Development Support

The CY8C56LP family has a rich set of documentation, development tools, and online resources to assist you during your development process. Visit psoc.cypress.com/getting-started to find out more.

10.1 Documentation

A suite of documentation, to ensure that you can find answers to your questions quickly, supports the CY8C56LP family. This section contains a list of some of the key documents.

Software User Guide: A step-by-step guide for using PSoC Creator. The software user guide shows you how the PSoC Creator build process works in detail, how to use source control with PSoC Creator, and much more.

Component Datasheets: The flexibility of PSoC allows the creation of new peripherals (components) long after the device has gone into production. Component datasheets provide all of the information needed to select and use a particular component, including a functional description, API documentation, example code, and AC/DC specifications.

Application Notes: PSoC application notes discuss a particular application of PSoC in depth; examples include brushless DC motor control and on-chip filtering. Application notes often include example projects in addition to the application note document.

Technical Reference Manual: PSoC Creator makes designing with PSoC as easy as dragging a peripheral onto a schematic, but, when low level details of the PSoC device are required, use the technical reference manual (TRM) as your guide.

Note Visit www.arm.com for detailed documentation about the Cortex-M3 CPU.

10.2 Online

In addition to print documentation, the Cypress PSoC forums connect you with fellow PSoC users and experts in PSoC from around the world, 24 hours a day, 7 days a week.

10.3 Tools

With industry standard cores, programming, and debugging interfaces, the CY8C56LP family is part of a development tool ecosystem. Visit us at www.cypress.com/go/psoccreator for the latest information on the revolutionary, easy to use PSoC Creator IDE, supported third party compilers, programmers, debuggers, and development kits.

11. Electrical Specifications

Specifications are valid for –40 °C ≤ T_A ≤ 85 °C and T_J ≤ 100 °C, except where noted. Specifications are valid for 1.71 V to 5.5 V, except where noted. The unique flexibility of the PSoC UDBs and analog blocks enable many functions to be implemented in PSoC Creator components, see the component datasheets for full AC/DC specifications of individual functions. See the "Example Peripherals" section on page 35 for further explanation of PSoC Creator components.

11.1 Absolute Maximum Ratings

Table 11-1. Absolute Maximum Ratings DC Specifications

Parameter	Description	Conditions	Min	Typ	Max	Units
T_{STG}	Storage temperature Ft	Extended duration storage temperatures above 100 °C degrade reliability.	–55	25	100	°C
V_{DDA}	Analog supply voltage relative to V_{SSA}		–0.5	–	6	V
V_{DDD}	Digital supply voltage relative to V_{SSD}		–0.5	–	6	V
V_{DDIO}	I/O supply voltage relative to V_{SSD}		–0.5	–	6	V
V_{CCA}	Direct analog core voltage input		–0.5	–	1.95	V
V_{CCD}	Direct digital core voltage input		–0.5	–	1.95	V
V_{SSA}	Analog ground voltage		V_{SSD} –0.5	–	V_{SSD} + 0.5	V
V_{GPIO}[14]	DC input voltage on GPIO	Includes signals sourced by V_{DDA} and routed internal to the pin.	V_{SSD} –0.5	–	V_{DDIO} + 0.5	V
V_{SIO}	DC input voltage on SIO	Output disabled	V_{SSD} –0.5	–	7	V
		Output enabled	V_{SSD} –0.5	–	6	V
V_{IND}	Voltage at boost converter input		0.5	–	5.5	V
V_{BAT}	Boost converter supply		V_{SSD} –0.5	–	5.5	V
I_{VDDIO}	Current per V_{DDIO} supply pin		–	–	100	mA
I_{GPIO}	GPIO current		–30	–	41	mA
I_{SIO}	SIO current		–49	–	28	mA
I_{USBIO}	USBIO current		–56	–	59	mA
LU	Latch up current[15]		–140	–	140	mA
ESD_{HBM}	Electrostatic discharge voltage	Human Body Model	2000	–	–	V
ESD_{CDM}	Electrostatic discharge voltage	Charge Device Model	500	–	–	V

Note Usage above the absolute maximum conditions listed in Table 11-1 may cause permanent damage to the device. Exposure to maximum conditions for extended periods of time may affect device reliability. When used below maximum conditions but above normal operating conditions the device may not operate to specification.

Notes
14. The V_{DDIO} supply voltage must be greater than the maximum voltage on the associated GPIO pins. Maximum voltage on GPIO pin ≤ V_{DDIO} ≤ V_{DDA}.
15. Meets or exceeds JEDEC Spec EIA/JESD78 IC Latch-up Test.

11.2 Device Level Specifications

Specifications are valid for –40 °C ≤ T_A ≤ 85 °C and T_J ≤ 100 °C, except where noted. Specifications are valid for 1.71 V to 5.5 V, except where noted. Unless otherwise specified, all charts and graphs show typical values.

11.2.1 Device Level Specifications

Table 11-2. DC Specifications

Parameter	Description	Conditions		Min	Typ	Max	Units
V_{DDA}	Analog supply voltage and input to analog core regulator	Analog core regulator enabled		1.8	–	5.5	V
V_{DDA}	Analog supply voltage, analog regulator bypassed	Analog core regulator disabled		1.71	1.8	1.89	V
V_{DDD}	Digital supply voltage relative to V_{SSD}	Digital core regulator enabled		1.8	–	V_{DDA}[16]	V
V_{DDD}	Digital supply voltage, digital regulator bypassed	Digital core regulator disabled		1.71	1.8	1.89	V
V_{DDIO}[17]	I/O supply voltage relative to V_{SSIO}			1.71	–	V_{DDA}[16]	V
V_{CCA}	Direct analog core voltage input (Analog regulator bypass)	Analog core regulator disabled		1.71	1.8	1.89	V
V_{CCD}	Direct digital core voltage input (Digital regulator bypass)	Digital core regulator disabled		1.71	1.8	1.89	V
Active Mode							
I_{DD}[18]	Sum of digital and analog I_{DDD} + I_{DDA}. I_{DDIOX} for I/Os not included. IMO enabled, bus clock and CPU clock enabled. CPU executing complex program from flash.	V_{DDX} = 2.7 V to 5.5 V; F_{CPU} = 3 MHz[19]	T = –40 °C	–	1.9	3.8	mA
			T = 25 °C	–	1.9	3.8	
			T = 85 °C	–	2	3.8	
		V_{DDX} = 2.7 V to 5.5 V; F_{CPU} = 6 MHz	T = –40 °C	–	3.1	5	
			T = 25 °C	–	3.1	5	
			T = 85 °C	–	3.2	5	
		V_{DDX} = 2.7 V to 5.5 V; F_{CPU} = 12 MHz[19]	T = –40 °C	–	5.4	7	
			T = 25 °C	–	5.4	7	
			T = 85 °C	–	5.6	7	
		V_{DDX} = 2.7 V to 5.5 V; F_{CPU} = 24 MHz[19]	T = –40 °C	–	8.9	10.5	
			T = 25 °C	–	8.9	10.5	
			T = 85 °C	–	9.1	10.5	
		V_{DDX} = 2.7 V to 5.5 V; F_{CPU} = 48 MHz[19]	T = –40 °C	–	15.5	17	
			T = 25 °C	–	15.4	17	
			T = 85 °C	–	15.7	17	
		V_{DDX} = 2.7 V to 5.5 V; F_{CPU} = 62 MHz	T = –40 °C	–	18	19.5	
			T = 25 °C	–	18	19.5	
			T = 85 °C	–	18.5	19.5	

Notes

16. The power supplies can be brought up in any sequence however once stable V_{DDA} must be greater than or equal to all other supplies.
17. The V_{DDIO} supply voltage must be greater than the maximum voltage on the associated GPIO pins. Maximum voltage on GPIO pin ≤ V_{DDIO} ≤ V_{DDA}.
18. The current consumption of additional peripherals that are implemented only in programmed logic blocks can be found in their respective datasheets, available in PSoC Creator, the integrated design environment. To estimate total current, find CPU current at frequency of interest and add peripheral currents for your particular system from the device datasheet and component datasheets.
19. Based on device characterization (Not production tested).

Table 11-2. DC Specifications (continued)

Parameter	Description	Conditions		Min	Typ	Max	Units
I_{DD}[20]	**Sleep Mode**[21]						
	CPU = OFF RTC = ON (= ECO32K ON, in low-power mode) Sleep timer = ON (= ILO ON at 1 kHz)[22] WDT = OFF I^2C Wake = OFF Comparator = OFF POR = ON Boost = OFF SIO pins in single ended input, unregulated output mode	$V_{DD} = V_{DDIO}$ = 4.5–5.5 V	T = –40 °C	–	1.9	3.1	µA
			T = 25 °C	–	2.4	3.6	
			T = 85 °C	–	5	16	
		$V_{DD} = V_{DDIO}$ = 2.7–3.6 V	T = –40 °C	–	1.7	3.1	
			T = 25 °C	–	2	3.6	
			T = 85 °C	–	4.2	16	
		$V_{DD} = V_{DDIO}$ = 1.71–1.95 V	T = –40 °C	–	1.6	3.1	
			T = 25 °C	–	1.9	3.6	
			T = 85 °C	–	4.2	16	
	Comparator = ON CPU = OFF RTC = OFF Sleep timer = OFF WDT = OFF I2C Wake = OFF POR = ON Boost = OFF SIO pins in single ended input, unregulated output mode	$V_{DD} = V_{DDIO}$ = 2.7–3.6 V[23]	T = 25 °C	–	3	4.2	µA
	I2C Wake = ON CPU = OFF RTC = OFF Sleep timer = OFF WDT = OFF Comparator = OFF POR = ON Boost = OFF SIO pins in single ended input, unregulated output mode	$V_{DD} = V_{DDIO}$ = 2.7–3.6 V[23]	T = 25 °C	–	1.7	3.6	µA
	Hibernate Mode						
	Hibernate mode current All regulators and oscillators off. SRAM retention GPIO interrupts are active Boost = OFF SIO pins in single ended input, unregulated output mode	$V_{DD} = V_{DDIO}$ = 4.5–5.5 V	T = –40 °C	–	0.2	2	µA
			T = 25 °C	–	0.24	2	
			T = 85 °C	–	2.6	15	
		$V_{DD} = V_{DDIO}$ = 2.7–3.6 V	T = –40 °C	–	0.11	2	
			T = 25 °C	–	0.3	2	
			T = 85 °C	–	2	15	
		$V_{DD} = V_{DDIO}$ = 1.71–1.95 V	T = –40 °C	–	0.9	2	
			T = 25 °C	–	0.11	2	
			T = 85 °C	–	1.8	15	
I_{DDAR}[23]	Analog current consumption while device is reset	$V_{DDA} \le 3.6$ V		–	0.3	0.6	mA
		$V_{DDA} > 3.6$ V		–	1.4	3.3	mA
I_{DDDR}[23]	Digital current consumption while device is reset	$V_{DDD} \le 3.6$ V		–	1.1	3.1	mA
		$V_{DDD} > 3.6$ V		–	0.7	3.1	mA
I_{DD_PROG}[23]	Current consumption while device programming. Sum of digital, analog, and IOs: $I_{DDD} + I_{DDA} + I_{DDIOX}$.			–	15	21	mA

Notes
20. The current consumption of additional peripherals that are implemented only in programmed logic blocks can be found in their respective datasheets, available in PSoC Creator, the integrated design environment. To estimate total current, find CPU current at frequency of interest and add peripheral currents for your particular system from the device datasheet and component datasheets.
21. If V_{CCD} and V_{CCA} are externally regulated, the voltage difference between V_{CCD} and V_{CCA} must be less than 50 mV.
22. Sleep timer generates periodic interrupts to wake up the CPU. This specification applies only to those times that the CPU is off.
23. Based on device characterization (Not production tested).

Figure 11-1. I_{DD} vs Frequency at 25 °C

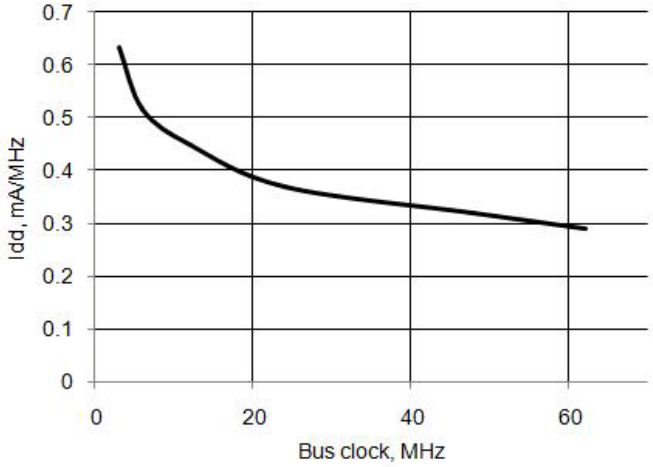

Table 11-3. AC Specifications

Parameter	Description	Conditions	Min	Typ	Max	Units
F_{CPU}	CPU frequency	1.71 V ≤ V_{DDD} ≤ 5.5 V	DC	–	67.01	MHz
F_{BUSCLK}	Bus frequency	1.71 V ≤ V_{DDD} ≤ 5.5 V	DC	–	67.01	MHz
S_{VDD}[24]	V_{DD} ramp rate		–	–	0.066	V/µs
T_{IO_INIT}[24]	Time from $V_{DDD}/V_{DDA}/V_{CCD}/V_{CCA}$ ≥ IPOR to I/O ports set to their reset states		–	–	10	µs
$T_{STARTUP}$[24]	Time from $V_{DDD}/V_{DDA}/V_{CCD}/V_{CCA}$ ≥ PRES to CPU executing code at reset vector	V_{CCA}/V_{DDA} = regulated from V_{DDA}/V_{DDD}, no PLL used, fast IMO boot mode (48 MHz typ.)	–	–	33	µs
		V_{CCA}/V_{CCD} = regulated from V_{DDA}/V_{DDD}, no PLL used, slow IMO boot mode (12 MHz typ.)	–	–	66	µs
T_{SLEEP}[24]	Wakeup from sleep mode – Application of non-LVD interrupt to beginning of execution of next CPU instruction		–	–	25	µs
$T_{HIBERNATE}$[24]	Wakeup form hibernate mode – Application of external interrupt to beginning of execution of next CPU instruction		–	–	200	µs

Note
24. Based on device characterization (not production tested).

11.3 Power Regulators

Specifications are valid for –40 °C ≤ T_A ≤ 85 °C and T_J ≤ 100 °C, except where noted. Specifications are valid for 1.71 V to 5.5 V, except where noted.

11.3.1 Digital Core Regulator

Table 11-4. Digital Core Regulator DC Specifications

Parameter	Description	Conditions	Min	Typ	Max	Units
V_{DDD}	Input voltage		1.8	–	5.5	V
V_{CCD}	Output voltage		–	1.80	–	V
	Regulator output capacitor	±10%, X5R ceramic or better. The two V_{CCD} pins must be shorted together, with as short a trace as possible, see Power System on page 24	–	1	–	µF

Figure 11-2. Analog and Digital Regulators, V_{CC} vs V_{DD}, 10 mA Load

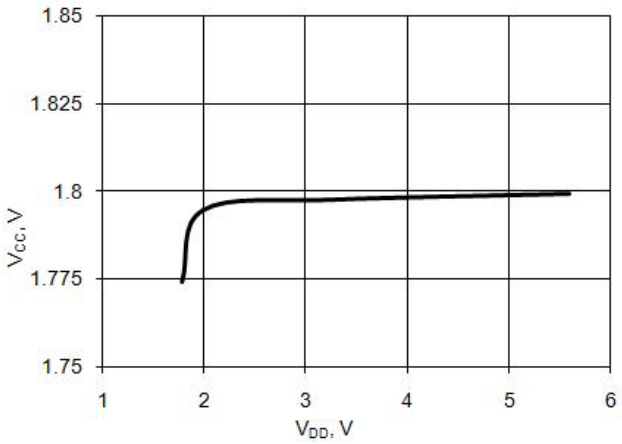

Figure 11-3. Digital Regulator PSRR vs Frequency and V_{DD}

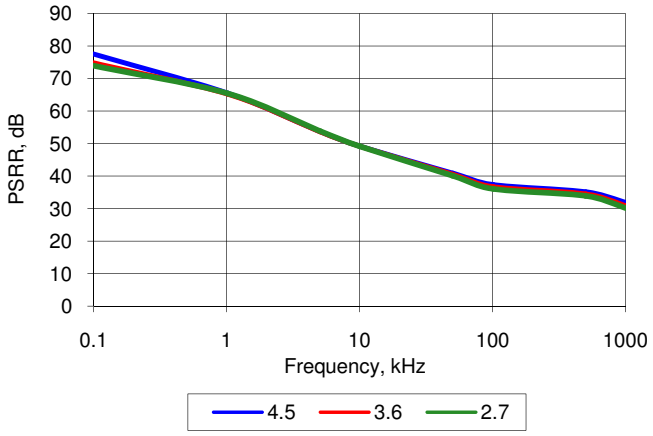

11.3.2 Analog Core Regulator

Table 11-5. Analog Core Regulator DC Specifications

Parameter	Description	Conditions	Min	Typ	Max	Units
V_{DDA}	Input voltage		1.8	–	5.5	V
V_{CCA}	Output voltage		–	1.80	–	V
	Regulator output capacitor	±10%, X5R ceramic or better	–	1	–	µF

Figure 11-4. Analog Regulator PSRR vs Frequency and V_{DD}

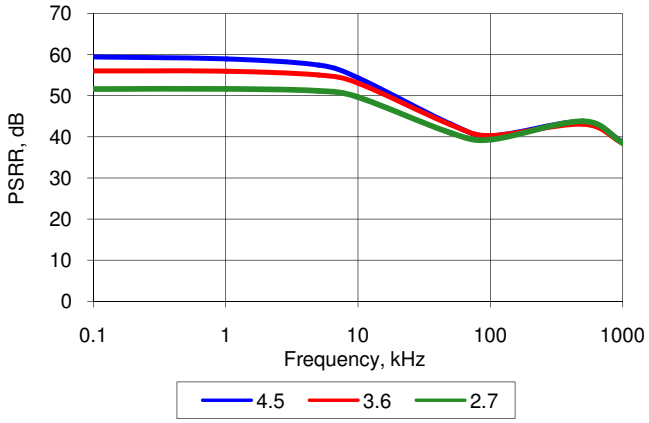

11.3.3 Inductive Boost Regulator.

Table 11-6. Inductive Boost Regulator DC Specifications[25]

Unless otherwise specified, operating conditions are: L_{BOOST} = 10 µH, C_{BOOST} = 22 µF || 0.1 µF, 2 < V_{BAT}:V_{OUT} ≤ 4.

Parameter	Description	Conditions	Min	Typ	Max	Units
V_{BAT}	Input voltage, includes startup voltage[26]	I_{OUT} < 7.5 mA, V_{OUT} = 1.8 V nominal	0.5	–	0.6	V
		External diode required if V_{BAT} < 0.9 V	0.6	–	3.6	V
I_{OUT}	Load current, steady state[26]	V_{BAT} = 1.6 – 3.6 V, V_{OUT} = 1.6 – 3.6 V	–	–	75	mA
		V_{BAT} = 1.6 – 3.6 V, V_{OUT} = 3.6 – 5.0 V, external diode	–	–	50	mA
		V_{BAT} = 0.5 – 1.6 V, V_{OUT} = 1.6 – 3.6 V	–	–	15	mA
		V_{BAT} = 0.5 – 1.6 V, V_{OUT} = 3.6 – 5.0 V, external diode	–	–	15	mA
I_{LPK}	Inductor peak current		–	–	700	mA
I_Q	Quiescent current	Boost active mode	–	250	–	µA
		Boost sleep mode, I_{OUT} < 1 µA	–	25	–	µA
V_{OUT}	Boost output voltage[27]	1.8 V nominal	1.71	1.8	1.89	V
		1.9 V nominal	1.81	1.90	2.00	V
		2.0 V nominal	1.90	2.00	2.10	V
		2.4 V nominal	2.28	2.40	2.52	V
		2.7 V nominal	2.57	2.70	2.84	V
		3.0 V nominal	2.85	3.00	3.15	V
		3.3 V nominal	3.14	3.30	3.47	V
		3.6 V nominal, External diode required	3.42	3.60	3.78	V
		5.0 V nominal, External diode required	4.75	5.00	5.25	V
V_{OUT} : V_{BAT}	Ratio of V_{OUT} to V_{BAT}		–	–	4	ratio
Reg_{LOAD}	Load regulation		–	–	5	%
Reg_{LINE}	Line regulation		–	–	5	%

Notes
25. Based on device characterization (Not production tested).
26. For VBAT ≤ 0.9 V or VOUT ≥ 3.6 V, an external diode is required.
27. If powering the PSoC from boost with VBAT = 0.5 V, the IMO must be 3 MHz at startup.

Table 11-7. Inductive Boost Regulator AC Specifications

Parameter	Description	Conditions	Min	Typ	Max	Units
V_{RIPPLE}	Ripple voltage (peak-to-peak)[28]	L_{BOOST} = 10 µH, C_{BOOST} = 22 µF || 0.1 µF, 2 < V_{BAT}:V_{OUT} ≤ 4, Iout = 10 mA	–	–	100	mV

Table 11-8. Recommended External Components for Boost Circuit

Parameter	Description	Conditions	Min	Typ	Max	Units
L_{BOOST}	Boost inductor		4.7	10	22	µH
C_{BOOST}	Filter capacitor[28]	L_{BOOST} = 4.7 µH	–	10	–	µF
		L_{BOOST} = 10 µH	–	22	–	µF
		L_{BOOST} = 22 µH	–	22	–	µF
I_F	External Schottky diode average forward current		1	–	–	A
V_R			20	–	–	V

Figure 11-5. Efficiency vs I_{OUT} V_{BOOST} = 3.3 V, L_{BOOST} = 10 µH[29]

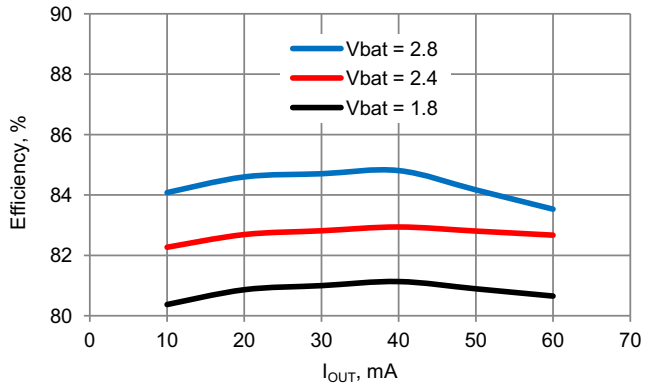

Figure 11-6. Efficiency vs IOUT VBOOST = 3.3 V, LBOOST = 22 µH[29]

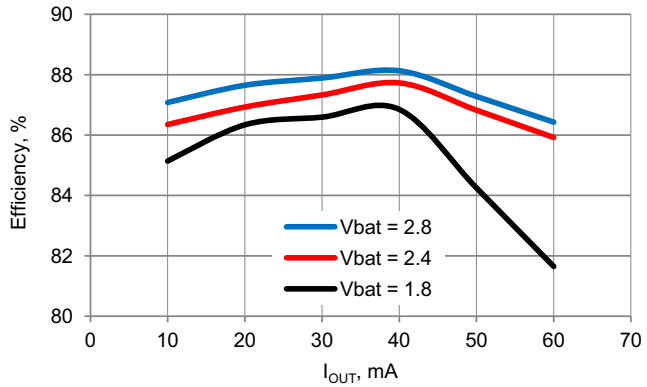

Notes
28. Based on device characterization (Not production tested).
29. Typical example. Actual efficiency may vary depending on external component selection, PCB layout, and other design parameters.

11.4 Inputs and Outputs

Specifications are valid for –40 °C ≤ T_A ≤ 85 °C and T_J ≤ 100 °C, except where noted. Specifications are valid for 1.71 V to 5.5 V, except where noted. Unless otherwise specified, all charts and graphs show typical values.

When the power supplies ramp up, there are low-impedance connections between each GPIO pin and its V_{DDIO} supply. This causes the pin voltages to track V_{DDIO} until both V_{DDIO} and V_{DDA} reach the IPOR voltage, which can be as high as 1.45 V. At that point the low-impedance connections no longer exist, and the pins change to their normal NVL settings.

Also, if V_{DDA} is less than V_{DDIO}, a low-impedance path may exist between a GPIO and V_{DDA}, causing the GPIO to track V_{DDA} until V_{DDA} becomes greater than or equal to V_{DDIO}.

11.4.1 GPIO

Table 11-9. GPIO DC Specifications

Parameter	Description	Conditions	Min	Typ	Max	Units
V_{IH}	Input voltage high threshold	CMOS Input, PRT[x]CTL = 0	0.7 × V_{DDIO}	–	–	V
V_{IL}	Input voltage low threshold	CMOS Input, PRT[x]CTL = 0	–	–	0.3 × V_{DDIO}	V
V_{IH}	Input voltage high threshold	LVTTL Input, PRT[x]CTL = 1,V_{DDIO} < 2.7 V	0.7 x V_{DDIO}	–	–	V
V_{IH}	Input voltage high threshold	LVTTL Input, PRT[x]CTL = 1, V_{DDIO} ≥ 2.7 V	2.0	–	–	V
V_{IL}	Input voltage low threshold	LVTTL Input, PRT[x]CTL = 1,V_{DDIO} < 2.7 V	–	–	0.3 × V_{DDIO}	V
V_{IL}	Input voltage low threshold	LVTTL Input, PRT[x]CTL = 1, V_{DDIO} ≥ 2.7 V	–	–	0.8	V
V_{OH}	Output voltage high	I_{OH} = 4 mA at 3.3 V_{DDIO}	V_{DDIO} – 0.6	–	–	V
		I_{OH} = 1 mA at 1.8 V_{DDIO}	V_{DDIO} – 0.5	–	–	V
V_{OL}	Output voltage low	I_{OL} = 8 mA at 3.3 V_{DDIO}	–	–	0.6	V
		I_{OL} = 3 mA at 3.3 V_{DDIO}	–	–	0.4	V
		I_{OL} = 4 mA at 1.8 V_{DDIO}	–	–	0.6	V
Rpullup	Pull up resistor		3.5	5.6	8.5	kΩ
Rpulldown	Pull down resistor		3.5	5.6	8.5	kΩ
I_{IL}	Input leakage current (absolute value)[30]	25 °C, V_{DDIO} = 3.0 V	–	–	2	nA
C_{IN}	Input capacitance[30]	GPIOs not shared with opamp outputs, MHz ECO or kHzECO	–	5	9	pF
		GPIOs shared with MHz ECO or kHzECO[31]	–	5	9	pF
		GPIOs shared with opamp outputs	–	10	20	pF
		GPIOs shared with SAR inputs	–	10	20	pF
V_H	Input voltage hysteresis (Schmitt–Trigger)[30]		–	40	–	mV
Idiode	Current through protection diode to V_{DDIO} and V_{SSIO}		–	–	100	µA
Rglobal	Resistance pin to analog global bus	25 °C, V_{DDIO} = 3.0 V	–	320	–	Ω
Rmux	Resistance pin to analog mux bus	25 °C, V_{DDIO} = 3.0 V	–	220	–	Ω

Notes
30. Based on device characterization (Not production tested).
31. For information on designing with PSoC 3 oscillators, refer to the application note, AN54439 - PSoC® 3 and PSoC 5 External Oscillator.

Figure 11-7. GPIO Output High Voltage and Current

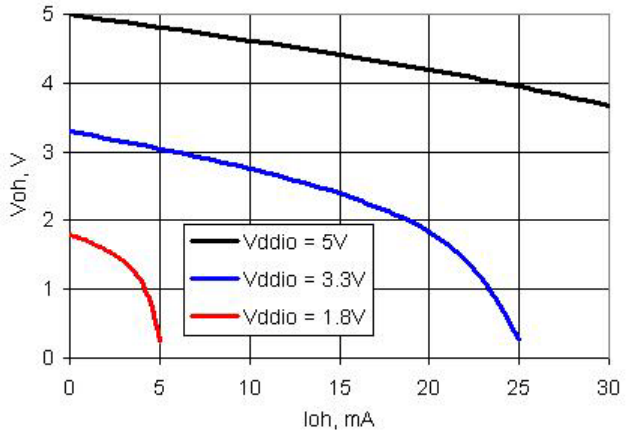

Figure 11-8. GPIO Output Low Voltage and Current

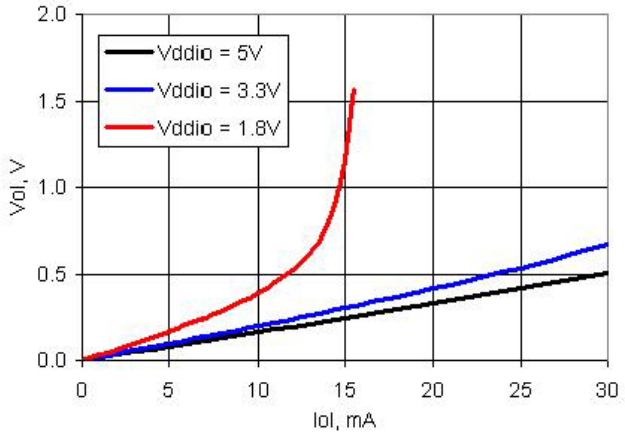

Table 11-10. GPIO AC Specifications[32]

Parameter	Description	Conditions	Min	Typ	Max	Units
TriseF	Rise time in Fast Strong Mode	3.3 V V_{DDIO} Cload = 25 pF	–	–	12	ns
TfallF	Fall time in Fast Strong Mode	3.3 V V_{DDIO} Cload = 25 pF	–	–	12	ns
TriseS	Rise time in Slow Strong Mode	3.3 V V_{DDIO} Cload = 25 pF	–	–	60	ns
TfallS	Fall time in Slow Strong Mode	3.3 V V_{DDIO} Cload = 25 pF	–	–	60	ns
Fgpioout	GPIO output operating frequency					
	2.7 V ≤ V_{DDIO} ≤ 5.5 V, fast strong drive mode	90/10% V_{DDIO} into 25 pF	–	–	33	MHz
	1.71 V ≤ V_{DDIO} < 2.7 V, fast strong drive mode	90/10% V_{DDIO} into 25 pF	–	–	20	MHz
	3.3 V ≤ V_{DDIO} ≤ 5.5 V, slow strong drive mode	90/10% V_{DDIO} into 25 pF	–	–	7	MHz
	1.71 V ≤ V_{DDIO} < 3.3 V, slow strong drive mode	90/10% V_{DDIO} into 25 pF	–	–	3.5	MHz
Fgpioin	GPIO input operating frequency	90/10% V_{DDIO}	–	–	66	MHz

Figure 11-9. GPIO Output Rise and Fall Times, Fast Strong Mode, V_{DDIO} = 3.3 V, 25 pF Load

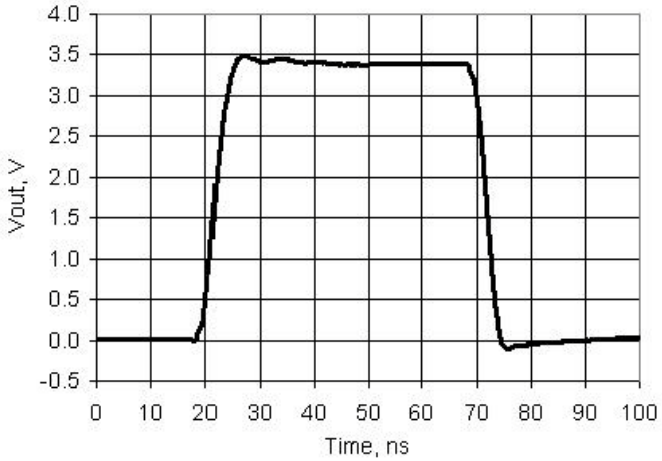

Figure 11-10. GPIO Output Rise and Fall Times, Slow Strong Mode, V_{DDIO} = 3.3 V, 25 pF Load

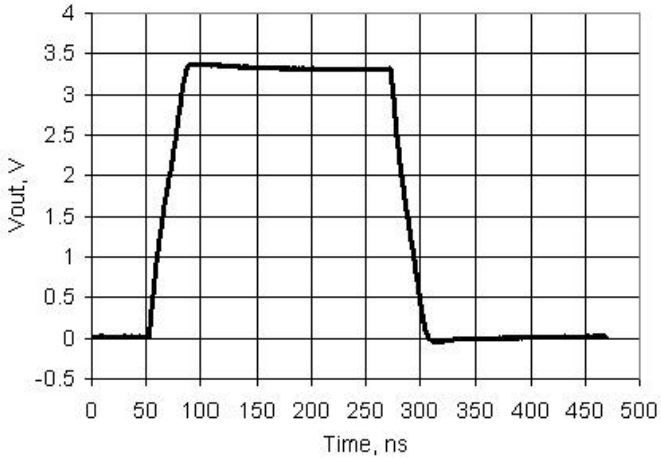

Note
32. Based on device characterization (Not production tested).

11.4.2 SIO

Table 11-11. SIO DC Specifications

Parameter	Description	Conditions	Min	Typ	Max	Units
Vinmax	Maximum input voltage	All allowed values of V_{DDIO} and V_{DDD}, see *Section 11.1*	–	–	5.5	V
Vinref	Input voltage reference (Differential input mode)		0.5	–	$0.52 \times V_{DDIO}$	V
Voutref	Output voltage reference (Regulated output mode)					
		$V_{DDIO} > 3.7$	1	–	$V_{DDIO}–1$	V
		$V_{DDIO} < 3.7$	1	–	$V_{DDIO} – 0.5$	V
V_{IH}	Input voltage high threshold					
	GPIO mode	CMOS input	$0.7 \times V_{DDIO}$	–	–	V
	Differential input mode[33]	Hysteresis disabled	SIO_ref + 0.2	–	–	V
V_{IL}	Input voltage low threshold					
	GPIO mode	CMOS input	–	–	$0.3 \times V_{DDIO}$	V
	Differential input mode[33]	Hysteresis disabled	–	–	SIO_ref – 0.2	V
V_{OH}	Output voltage high					
	Unregulated mode	I_{OH} = 4 mA, V_{DDIO} = 3.3 V	$V_{DDIO} – 0.4$	–	–	V
	Regulated mode[33]	I_{OH} = 1 mA	SIO_ref – 0.65	–	SIO_ref + 0.2	V
		I_{OH} = 0.1 mA	SIO_ref – 0.3	–	SIO_ref + 0.2	V
		no load, I_{OH} = 0	SIO_ref – 0.1	–	SIO_ref + 0.1	V
V_{OL}	Output voltage low	V_{DDIO} = 3.30 V, I_{OL} = 25 mA	–	–	0.8	V
		V_{DDIO} = 3.30 V, I_{OL} = 20 mA	–	–	0.4	V
		V_{DDIO} = 1.80 V, I_{OL} = 4 mA	–	–	0.4	V
Rpullup	Pull up resistor		3.5	5.6	8.5	kΩ
Rpulldown	Pull down resistor		3.5	5.6	8.5	kΩ
I_{IL}	Input leakage current (absolute value)[34]					
	$V_{IH} \le V_{DDSIO}$	25 °C, V_{DDSIO} = 3.0 V, V_{IH} = 3.0 V	–	–	14	nA
	$V_{IH} > V_{DDSIO}$	25 °C, V_{DDSIO} = 0 V, V_{IH} = 3.0 V	–	–	10	µA
C_{IN}	Input capacitance[34]		–	–	7	pF
V_H	Input voltage hysteresis (Schmitt–Trigger)[34]	Single ended mode (GPIO mode)	–	115	–	mV
		Differential mode	–	50	–	mV
Idiode	Current through protection diode to V_{SSIO}		–	–	100	µA

Notes
33. See Figure 6-9 on page 30 and Figure 6-12 on page 33 for more information on SIO reference.
34. Based on device characterization (Not production tested).

Figure 11-11. SIO Output High Voltage and Current, Unregulated Mode

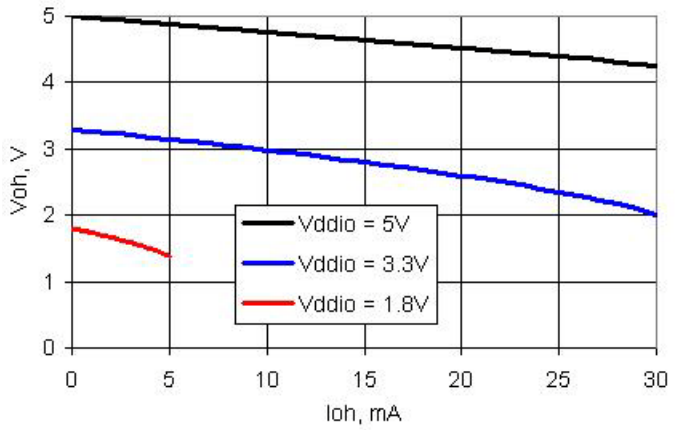

Figure 11-12. SIO Output Low Voltage and Current, Unregulated Mode

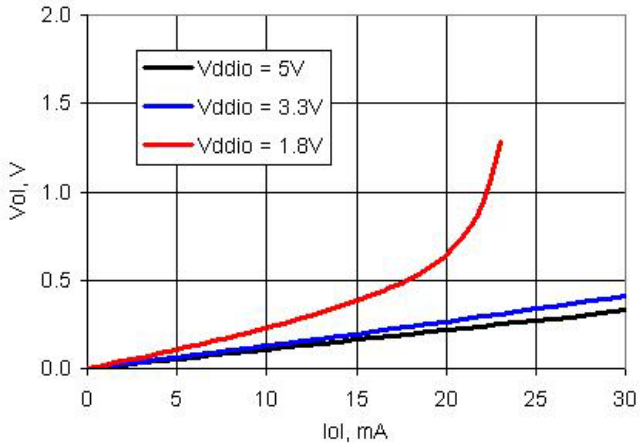

Figure 11-13. SIO Output High Voltage and Current, Regulated Mode

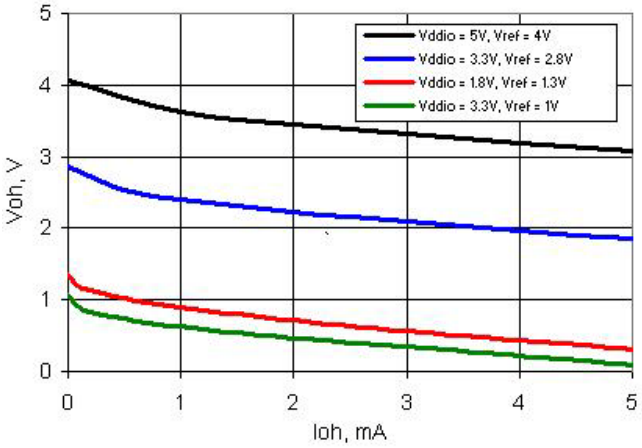

Table 11-12. SIO AC Specifications[35]

Parameter	Description	Conditions	Min	Typ	Max	Units
TriseF	Rise time in Fast Strong Mode (90/10%)	Cload = 25 pF, V_{DDIO} = 3.3 V	–	–	12	ns
TfallF	Fall time in Fast Strong Mode (90/10%)	Cload = 25 pF, V_{DDIO} = 3.3 V	–	–	12	ns
TriseS	Rise time in Slow Strong Mode (90/10%)	Cload = 25 pF, V_{DDIO} = 3.0 V	–	–	75	ns
TfallS	Fall time in Slow Strong Mode (90/10%)	Cload = 25 pF, V_{DDIO} = 3.0 V	–	–	60	ns
Fsioout	SIO output operating frequency					
	2.7 V < V_{DDIO} < 5.5 V, Unregulated output (GPIO) mode, fast strong drive mode	90/10% V_{DDIO} into 25 pF	–	–	33	MHz
	1.71 V < V_{DDIO} < 2.7 V, Unregulated output (GPIO) mode, fast strong drive mode	90/10% V_{DDIO} into 25 pF	–	–	16	MHz
	3.3 V < V_{DDIO} < 5.5 V, Unregulated output (GPIO) mode, slow strong drive mode	90/10% V_{DDIO} into 25 pF	–	–	5	MHz
	1.71 V < V_{DDIO} < 3.3 V, Unregulated output (GPIO) mode, slow strong drive mode	90/10% V_{DDIO} into 25 pF	–	–	4	MHz
	2.7 V < V_{DDIO} < 5.5 V, Regulated output mode, fast strong drive mode	Output continuously switching into 25 pF	–	–	20	MHz
	1.71 V < V_{DDIO} < 2.7 V, Regulated output mode, fast strong drive mode	Output continuously switching into 25 pF	–	–	10	MHz
	1.71 V < V_{DDIO} < 5.5 V, Regulated output mode, slow strong drive mode	Output continuously switching into 25 pF	–	–	2.5	MHz
Fsioin	SIO input operating frequency					
	1.71 V ≤ V_{DDIO} ≤ 5.5 V	90/10% V_{DDIO}	–	–	66	MHz

Figure 11-14. SIO Output Rise and Fall Times, Fast Strong Mode, V_{DDIO} = 3.3 V, 25 pF Load

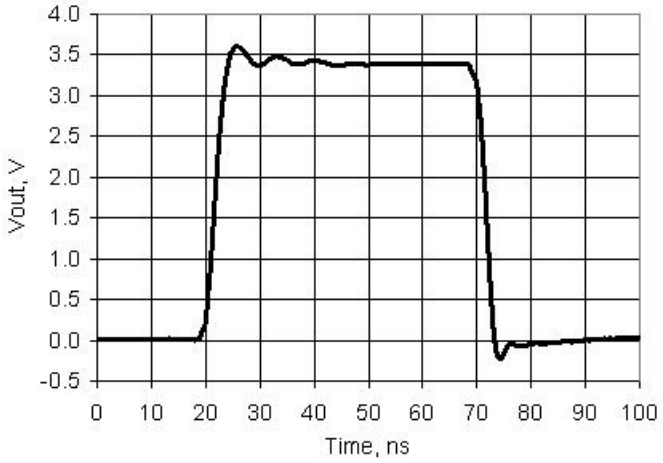

Figure 11-15. SIO Output Rise and Fall Times, Slow Strong Mode, V_{DDIO} = 3.3 V, 25 pF Load

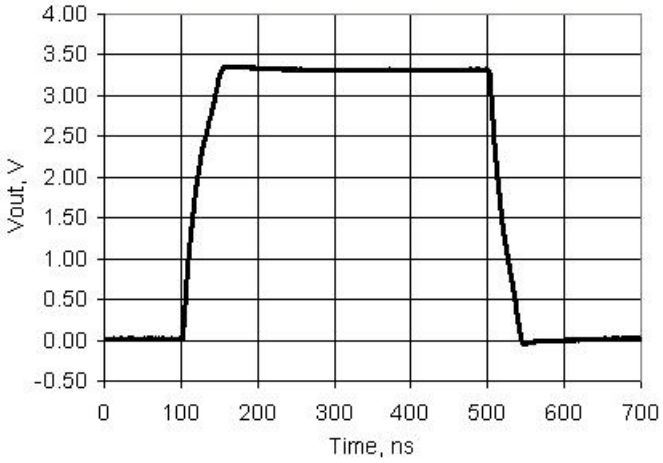

Note
35. Based on device characterization (Not production tested).

11.4.3 USBIO

For operation in GPIO mode, the standard range for V_{DDD} applies, see Device Level Specifications on page 63.

Table 11-13. USBIO DC Specifications

Parameter	Description	Conditions	Min	Typ	Max	Units
Rusbi	USB D+ pull-up resistance[36]	With idle bus	0.900	–	1.575	kΩ
Rusba	USB D+ pull-up resistance[36]	While receiving traffic	1.425	–	3.090	kΩ
Vohusb	Static output high[36]	15 kΩ ±5% to V_{SS}, internal pull-up enabled	2.8	–	3.6	V
Volusb	Static output low[36]	15 kΩ ±5% to V_{SS}, internal pull-up enabled	–	–	0.3	V
Vihgpio	Input voltage high, GPIO mode[36]	V_{DDD} = 1.8 V	1.5	–	–	V
		V_{DDD} = 3.3 V	2	–	–	V
		V_{DDD} = 5.0 V	2	–	–	V
Vilgpio	Input voltage low, GPIO mode[36]	V_{DDD} = 1.8 V	–	–	0.8	V
		V_{DDD} = 3.3 V	–	–	0.8	V
		V_{DDD} = 5.0 V	–	–	0.8	V
Vohgpio	Output voltage high, GPIO mode[36]	I_{OH} = 4 mA, V_{DDD} = 1.8 V	1.6	–	–	V
		I_{OH} = 4 mA, V_{DDD} = 3.3 V	3.1	–	–	V
		I_{OH} = 4 mA, V_{DDD} = 5.0 V	4.2	–	–	V
Volgpio	Output voltage low, GPIO mode[36]	I_{OL} = 4 mA, V_{DDD} = 1.8 V	–	–	0.3	V
		I_{OL} = 4 mA, V_{DDD} = 3.3 V	–	–	0.3	V
		I_{OL} = 4 mA, V_{DDD} = 5.0 V	–	–	0.3	V
V_{DI}	Differential input sensitivity	|(D+)–(D–)|	–	–	0.2	V
Vcm	Differential input common mode range		0.8	–	2.5	V
Vse	Single ended receiver threshold		0.8	–	2	V
Rps2	PS/2 pull-up resistance[36]	In PS/2 mode, with PS/2 pull-up enabled	3	–	7	kΩ
Rext	External USB series resistor [36]	In series with each USB pin	21.78 (–1%)	22	22.22 (+1%)	Ω
Zo	USB driver output impedance[36]	Including Rext	28	–	44	Ω
C_{IN}	USB transceiver input capacitance		–	–	20	pF
I_{IL}	Input leakage current (absolute value)[36]	25 °C, V_{DDD} = 3.0 V	–	–	2	nA

Note
36. Based on device characterization (Not production tested).

Figure 11-16. USBIO Output High Voltage and Current, GPIO Mode

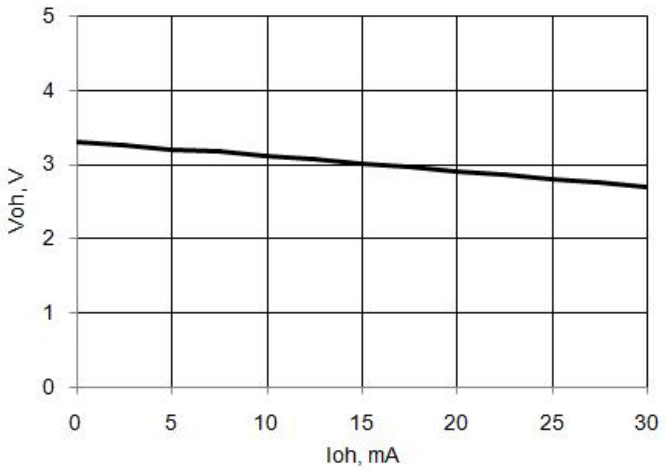

Figure 11-17. USBIO Output Low Voltage and Current, GPIO Mode

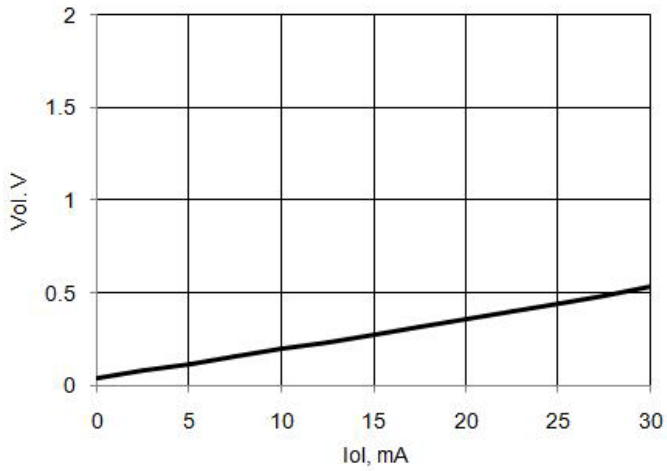

Table 11-14. USBIO AC Specifications[37]

Parameter	Description	Conditions	Min	Typ	Max	Units
Tdrate	Full–speed data rate average bit rate		12 – 0.25%	12	12 + 0.25%	MHz
Tjr1	Receiver data jitter tolerance to next transition		–8	–	8	ns
Tjr2	Receiver data jitter tolerance to pair transition		–5	–	5	ns
Tdj1	Driver differential jitter to next transition		–3.5	–	3.5	ns
Tdj2	Driver differential jitter to pair transition		–4	–	4	ns
Tfdeop	Source jitter for differential transition to SE0 transition		–2	–	5	ns
Tfeopt	Source SE0 interval of EOP		160	–	175	ns
Tfeopr	Receiver SE0 interval of EOP		82	–	–	ns
Tfst	Width of SE0 interval during differential transition		–	–	14	ns
Fgpio_out	GPIO mode output operating frequency	$3\ V \le V_{DDD} \le 5.5\ V$	–	–	20	MHz
		$V_{DDD} = 1.71\ V$	–	–	6	MHz
Tr_gpio	Rise time, GPIO mode, 10%/90% V_{DDD}	$V_{DDD} > 3\ V$, 25 pF load	–	–	12	ns
		$V_{DDD} = 1.71\ V$, 25 pF load	–	–	40	ns
Tf_gpio	Fall time, GPIO mode, 90%/10% V_{DDD}	$V_{DDD} > 3\ V$, 25 pF load	–	–	12	ns
		$V_{DDD} = 1.71\ V$, 25 pF load	–	–	40	ns

Note
37. Based on device characterization (Not production tested).

Figure 11-18. USBIO Output Rise and Fall Times, GPIO Mode, V_{DDD} = 3.3 V, 25 pF Load

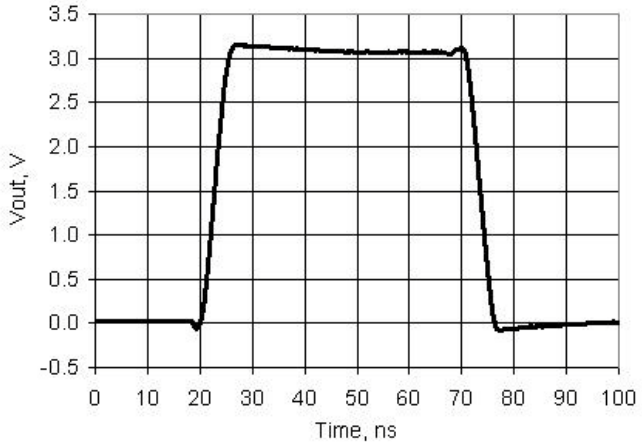

Table 11-15. USB Driver AC Specifications[38]

Parameter	Description	Conditions	Min	Typ	Max	Units
Tr	Transition rise time		–	–	20	ns
Tf	Transition fall time		–	–	20	ns
TR	Rise/fall time matching	V_{USB_5}, $V_{USB_3.3}$, see USB DC Specifications on page 100	90%	–	111%	
Vcrs	Output signal crossover voltage		1.3	–	2	V

11.4.4 XRES

Table 11-16. XRES DC Specifications

Parameter	Description	Conditions	Min	Typ	Max	Units
V_{IH}	Input voltage high threshold		0.7 × V_{DDIO}	–	–	V
V_{IL}	Input voltage low threshold		–	–	0.3 × V_{DDIO}	V
Rpullup	Pull up resistor		3.5	5.6	8.5	kΩ
C_{IN}	Input capacitance		–	3		pF
V_H	Input voltage hysteresis (Schmitt-trigger)		–	100	–	mV
Idiode	Current through protection diode to V_{DDIO} and V_{SSIO}		–	–	100	µA

Table 11-17. XRES AC Specifications[38]

Parameter	Description	Conditions	Min	Typ	Max	Units
T_{RESET}	Reset pulse width		1	–	–	µs

Note
38. Based on device characterization (Not production tested).

11.5 Analog Peripherals

Specifications are valid for –40 °C ≤ T_A ≤ 85 °C and T_J ≤ 100 °C, except where noted. Specifications are valid for 1.71 V to 5.5 V, except where noted.

11.5.1 Opamp

Table 11-18. Opamp DC Specifications

Parameter	Description	Conditions	Min	Typ	Max	Units
V_I	Input voltage range		V_{SSA}	–	V_{DDA}	V
Vos	Input offset voltage		–	–	2.5	mV
		Operating temperature –40 °C to 70 °C	–	–	2	mV
TCVos	Input offset voltage drift with temperature	Power mode = high	–	–	±30	µV / °C
Ge1	Gain error, unity gain buffer mode	Rload = 1 kΩ	–	–	±0.1	%
Cin	Input capacitance	Routing from pin	–	–	18	pF
Vo	Output voltage range	1 mA, source or sink, power mode = high	V_{SSA} + 0.05	–	V_{DDA} – 0.05	V
Iout	Output current capability, source or sink	V_{SSA} + 500 mV ≤ Vout ≤ V_{DDA} –500 mV, V_{DDA} > 2.7 V	25	–	–	mA
		V_{SSA} + 500 mV ≤ Vout ≤ V_{DDA} –500 mV, 1.7 V = V_{DDA} ≤ 2.7 V	16	–	–	mA
Idd	Quiescent current[39]	Power mode = min	–	250	400	uA
		Power mode = low	–	250	400	uA
		Power mode = med	–	330	950	uA
		Power mode = high	–	1000	2500	uA
CMRR	Common mode rejection ratio[39]		80	–	–	dB
PSRR	Power supply rejection ratio[39]	V_{DDA} ≥ 2.7 V	85	–	–	dB
		V_{DDA} < 2.7 V	70	–	–	dB

Figure 11-19. Opamp Voffset Histogram, 3388 samples/847 parts, 25 °C, V_{DDA} = 5 V

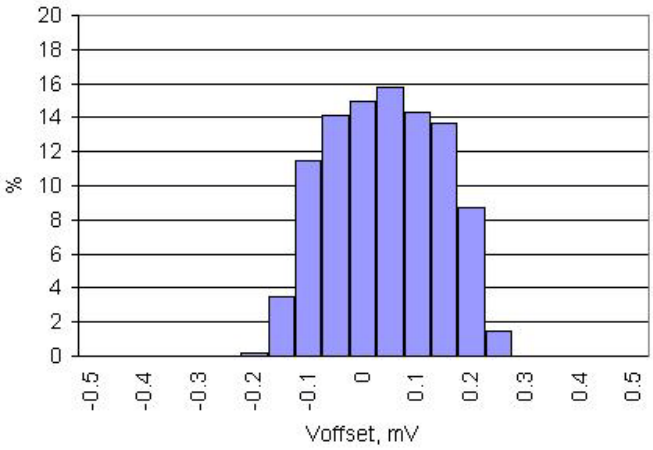

Figure 11-20. Opamp Voffset vs Temperature, V_{DDA} = 5V

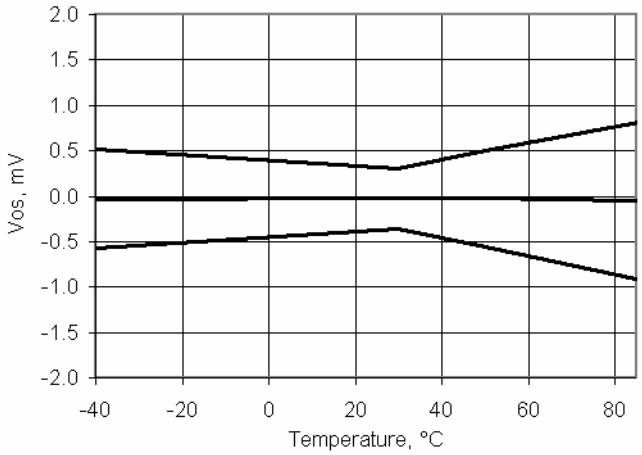

Note
39. Based on device characterization (Not production tested).

Figure 11-21. Opamp Voffset vs Vcommon and V_{DDA} 25 °C

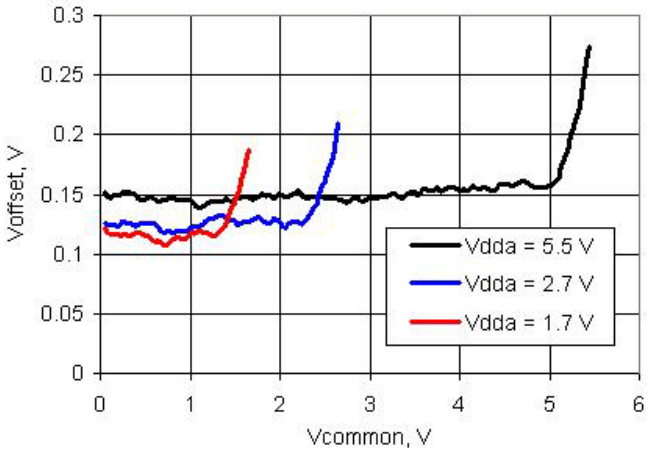

Figure 11-22. Opamp Output Voltage vs Load Current and Temperature, High Power Mode, 25 °C, V_{DDA} = 2.7 V

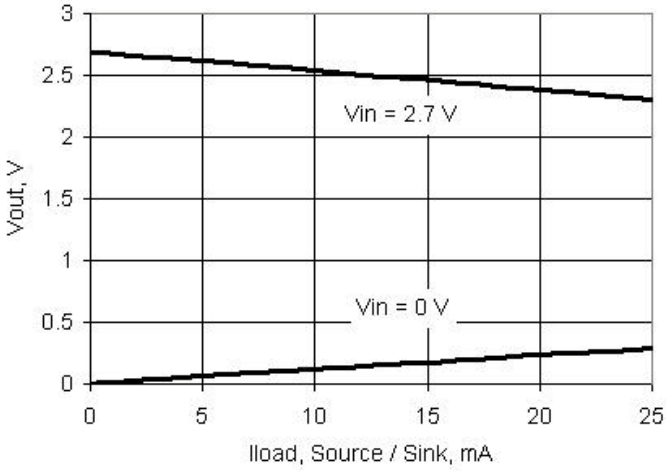

Figure 11-23. Opamp Operating Current vs V_{DDA} and Power Mode

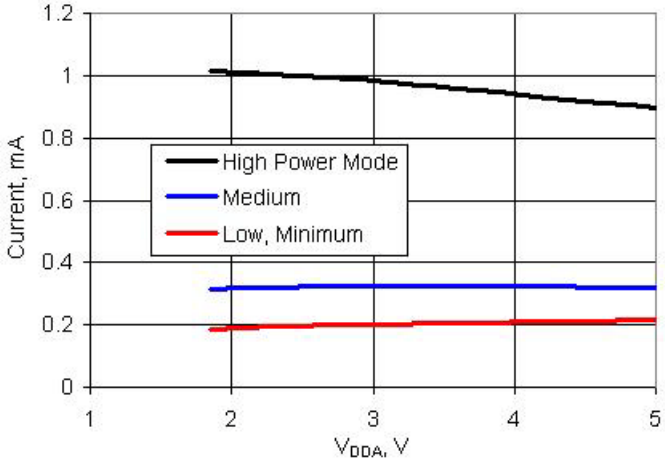

Table 11-19. Opamp AC Specifications[40]

Parameter	Description	Conditions	Min	Typ	Max	Units
GBW	Gain-bandwidth product	Power mode = minimum, 15 pF load	1	–	–	MHz
		Power mode = low, 15 pF load	2	–	–	MHz
		Power mode = medium, 200 pF load	1	–	–	MHz
		Power mode = high, 200 pF load	3	–	–	MHz
SR	Slew rate, 20% - 80%	Power mode = minimum, 15 pF load	1.1	–	–	V/µs
		Power mode = low, 15 pF load	1.1	–	–	V/µs
		Power mode = medium, 200 pF load	0.9	–	–	V/µs
		Power mode = high, 200 pF load	3	–	–	V/µs
e_n	Input noise density	Power mode = high, V_{DDA} = 5 V, at 100 kHz	–	45	–	nV/sqrtHz

Note
40. Based on device characterization (Not production tested).

Figure 11-24. Opamp Noise vs Frequency, Power Mode = High, V_{DDA} = 5 V

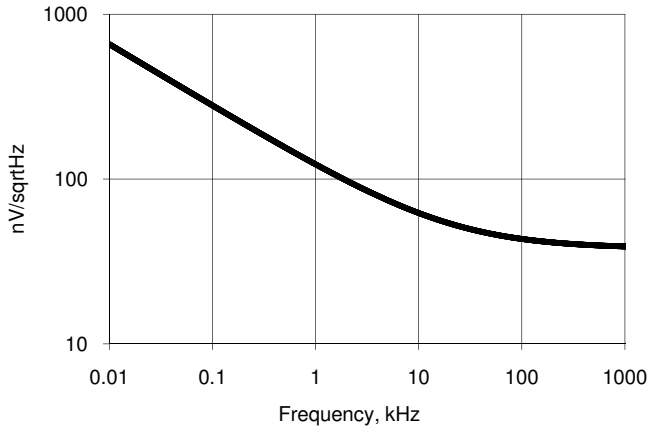

Figure 11-25. Opamp Step Response, Rising

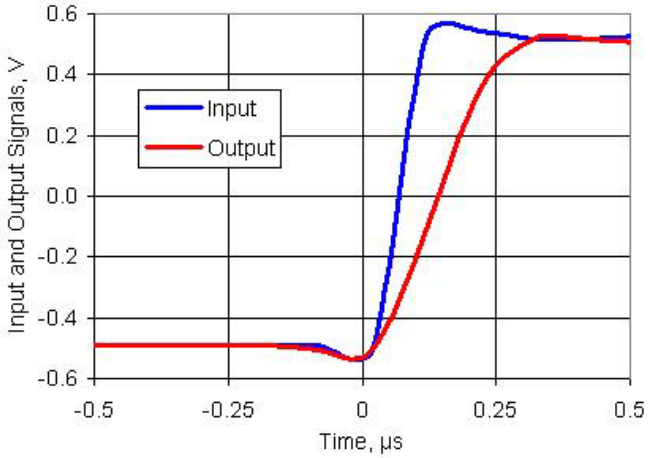

Figure 11-26. Opamp Step Response, Falling

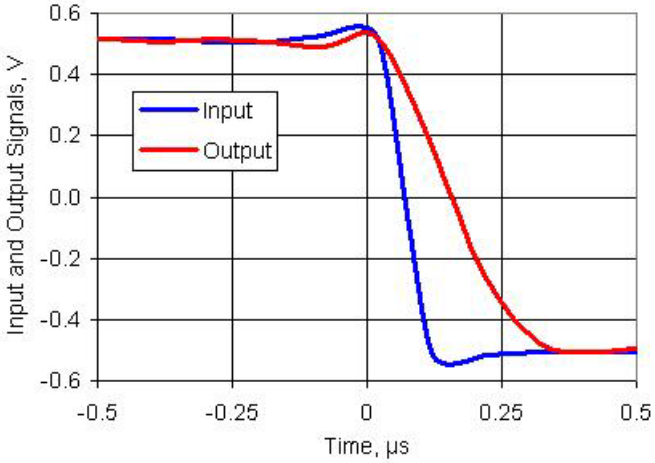

11.5.2 Delta-Sigma ADC

Unless otherwise specified, operating conditions are:

- Operation in continuous sample mode
- fclk = 6.144 MHz
- Reference = 1.024 V internal reference bypassed on P3.2 or P0.3
- Unless otherwise specified, all charts and graphs show typical values

Table 11-20. 12-bit Delta-sigma ADC DC Specifications

Parameter	Description	Conditions	Min	Typ	Max	Units
	Resolution		8	–	12	bits
	Number of channels, single ended		–	–	No. of GPIO	–
	Number of channels, differential	Differential pair is formed using a pair of GPIOs.	–	–	No. of GPIO/2	–
	Monotonic	Yes	–	–	–	–
Ge	Gain error	Buffered, buffer gain = 1, Range = ±1.024 V, 25 °C	–	–	±0.4	%
Gd	Gain drift	Buffered, buffer gain = 1, Range = ±1.024 V	–	–	50	ppm/°C
Vos	Input offset voltage	Buffered, 16-bit mode, full voltage range, 25 °C	–	–	±0.2	mV
		Buffered, 16-bit mode, V_{DDA} = 1.7 V, 25 °C	–	–	±0.1	mV
TCVos	Temperature coefficient, input offset voltage	Buffer gain = 1, 12-bit, Range = ±1.024 V	–	–	0.55	µV/°C
	Input voltage range, single ended[41]		V_{SSA}	–	V_{DDA}	V
	Input voltage range, differential unbuffered[41]		V_{SSA}	–	V_{DDA}	V
	Input voltage range, differential, buffered[41]		V_{SSA}	–	V_{DDA} – 1	V
INL12	Integral non linearity[41]	Range = ±1.024 V, unbuffered	–	–	±1	LSB
DNL12	Differential non linearity[41]	Range = ±1.024 V, unbuffered	–	–	±1	LSB
INL8	Integral non linearity[41]	Range = ±1.024 V, unbuffered	–	–	±1	LSB
DNL8	Differential non linearity[41]	Range = ±1.024 V, unbuffered	–	–	±1	LSB
Rin_Buff	ADC input resistance	Input buffer used	10	–	–	MΩ
Rin_ADC12	ADC input resistance	Input buffer bypassed, 12 bit, Range = ±1.024 V	–	148[42]	–	kΩ
Vextref	ADC external reference input voltage, see also internal reference in Voltage Reference on page 82	Pins P0[3], P3[2]	0.9	–	1.3	V
Current Consumption						
I_{DD_12}	Current consumption, 12 bit[41]	192 ksps, unbuffered	–	–	1.4	mA
I_{BUFF}	Buffer current consumption[41]		–	–	2.5	mA

Notes

41. Based on device characterization (not production tested).
42. By using switched capacitors at the ADC input an effective input resistance is created. Holding the gain and number of bits constant, the resistance is proportional to the inverse of the clock frequency. This value is calculated, not measured. For more information see the Technical Reference Manual.

Table 11-21. Delta-sigma ADC AC Specifications

Parameter	Description	Conditions	Min	Typ	Max	Units
	Startup time		–	–	4	Samples
THD	Total harmonic distortion[43]	Buffer gain = 1, 12-bit, Range = ±1.024 V	–	–	0.0032	%
12-Bit Resolution Mode						
SR12	Sample rate, continuous, high power[43]	Range = ±1.024 V, unbuffered	4	–	192	ksps
BW12	Input bandwidth at max sample rate[43]	Range = ±1.024 V, unbuffered	–	44	–	kHz
SINAD12int	Signal to noise ratio, 12-bit, internal reference[43]	Range = ±1.024 V, unbuffered	66	–	–	dB
8-Bit Resolution Mode						
SR8	Sample rate, continuous, high power[43]	Range = ±1.024 V, unbuffered	8	–	384	ksps
BW8	Input bandwidth at max sample rate[43]	Range = ±1.024 V, unbuffered	–	88	–	kHz
SINAD8int	Signal to noise ratio, 8-bit, internal reference[43]	Range = ±1.024 V, unbuffered	43	–	–	dB

Table 11-22. Delta-sigma ADC Sample Rates, Range = ±1.024 V

Resolution, Bits	Continuous		Multi-Sample	
	Min	Max	Min	Max
8	8000	384000	1911	91701
9	6400	307200	1543	74024
10	5566	267130	1348	64673
11	4741	227555	1154	55351
12	4000	192000	978	46900

Figure 11-27. Delta-sigma ADC IDD vs sps, Range = ±1.024 V, Continuous Sample Mode, Input Buffer Bypassed

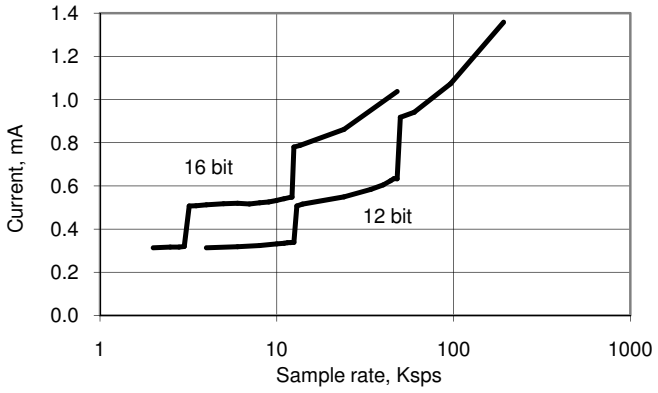

Note
43. Based on device characterization (Not production tested).

11.5.3 Voltage Reference

Table 11-23. Voltage Reference Specifications

Parameter	Description	Conditions	Min	Typ	Max	Units
V_{REF}	Precision reference voltage	Initial trimming	1.023 (–0.1%)	1.024	1.025 (+0.1%)	V
	Temperature drift[44]		–	–	30	ppm/°C
	Long term drift[44]		–	100	–	ppm/Khr
	Thermal cycling drift (stability)[44]		–	100	–	ppm

Figure 11-28. Vref vs Temperature

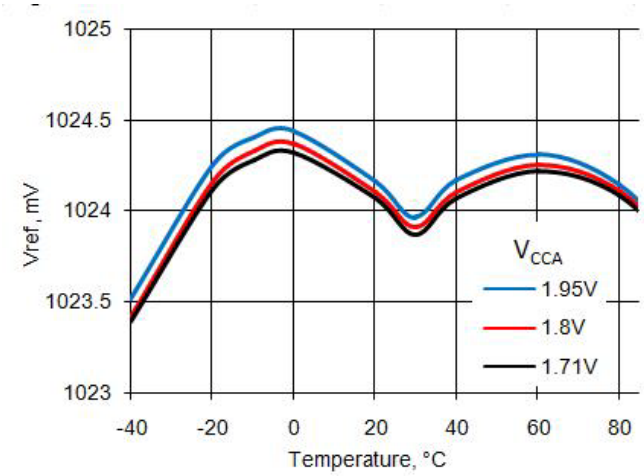

Figure 11-29. Vref Long-term Drift

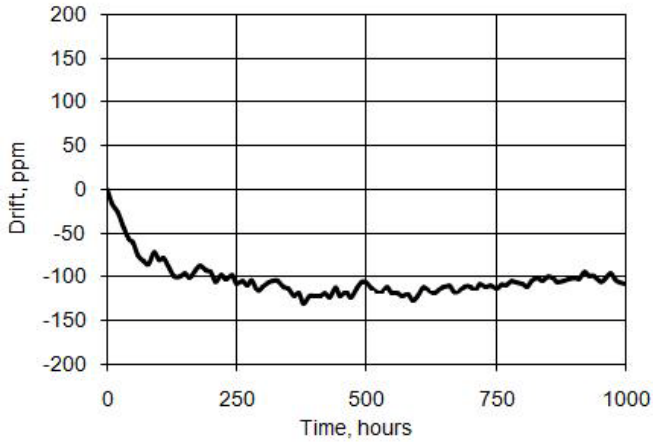

11.5.3 SAR ADC

Table 11-24. SAR ADC DC Specifications

Parameter	Description	Conditions	Min	Typ	Max	Units
	Resolution		–	–	12	bits
	Number of channels – single-ended		–	–	No of GPIO	
	Number of channels – differential	Differential pair is formed using a pair of neighboring GPIO.	–	–	No of GPIO/2	
	Monotonicity[44]		Yes	–	–	
Ge	Gain error[45]	External reference	–	–	±0.1	%
V_{OS}	Input offset voltage		–	–	±2	mV
I_{DD}	Current consumption[44]		–	–	1	mA
	Input voltage range – single-ended[44]		V_{SSA}	–	V_{DDA}	V
	Input voltage range – differential[44]		V_{SSA}	–	V_{DDA}	V
PSRR	Power supply rejection ratio[44]		70	–	–	dB
CMRR	Common mode rejection ratio		70	–	–	dB
INL	Integral non linearity[44]	V_{DDA} 1.71 to 5.5 V, 1 Msps, V_{REF} 1 to 5.5 V, bypassed at ExtRef pin	–	–	+2/–1.5	LSB
		V_{DDA} 2.0 to 3.6 V, 1 Msps, V_{REF} 2 to V_{DDA}, bypassed at ExtRef pin	–	–	±1.2	LSB
		V_{DDA} 1.71 to 5.5 V, 500 ksps, V_{REF} 1 to 5.5 V, bypassed at ExtRef pin	–	–	±1.3	LSB

Notes
44. Based on device characterization (Not production tested).
45. For total analog system Idd < 5 mA, depending on package used. With higher total analog system currents it is recommended that the SAR ADC be used in differential mode.

Table 11-24. SAR ADC DC Specifications (continued)

Parameter	Description	Conditions	Min	Typ	Max	Units
DNL	Differential non linearity[46]	V_{DDA} 1.71 to 5.5 V, 1 Msps, V_{REF} 1 to 5.5 V, bypassed at ExtRef pin	–	–	+2/–1	LSB
		V_{DDA} 2.0 to 3.6 V, 1 Msps, V_{REF} 2 to V_{DDA}, bypassed at ExtRef pin No missing codes	–	–	1.7/–0.99	LSB
		V_{DDA} 1.71 to 5.5 V, 500 ksps, V_{REF} 1 to 5.5 V, bypassed at ExtRef pin No missing codes	–	–	+2/–0.99	LSB
R_{IN}	Input resistance[46]		–	180	–	kΩ

Figure 11-30. SAR ADC DNL vs Output Code, Bypassed Internal Reference Mode

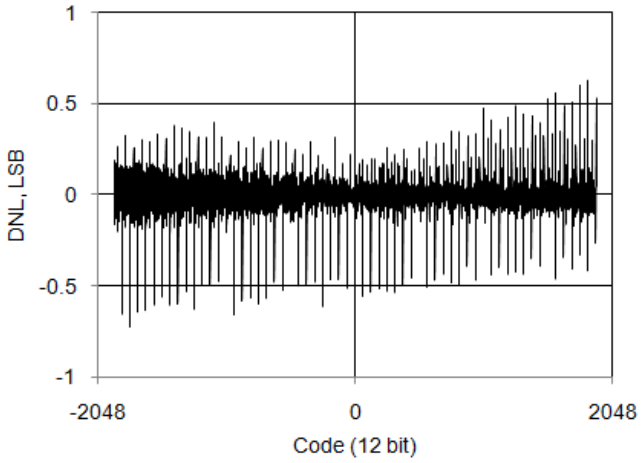

Figure 11-31. SAR ADC INL vs Output Code, Bypassed Internal Reference Mode

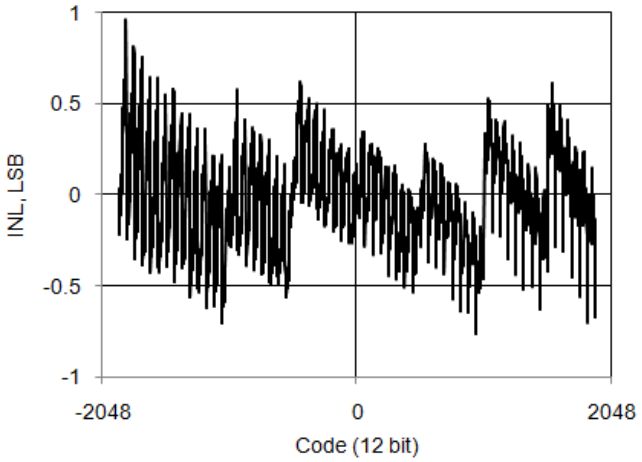

Figure 11-32. SAR ADC I_{DD} vs sps, V_{DDA} = 5 V, Continuous Sample Mode, External Reference Mode

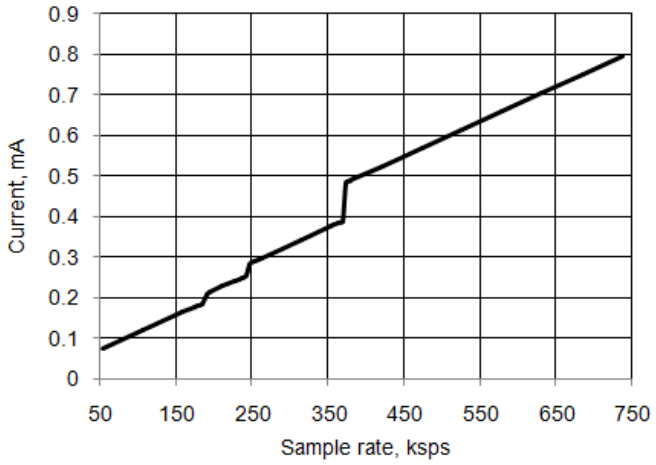

Note
46. Based on device characterization (Not production tested).

Table 11-25. SAR ADC AC Specifications[47]

Parameter	Description	Conditions	Min	Typ	Max	Units
Fclk	SAR clock frequency		1	–	18	MHz
Tc	Conversion time	One conversion requires 18 SAR clocks. Maximum sample rate is 1 Msps	1	–	18	µs
	Startup time		–	–	10	µs
SINAD	Signal-to-noise ratio		68	–	–	dB
THD	Total harmonic distortion		–	–	0.02	%

Figure 11-33. SAR ADC Noise Histogram, 1000 samples, 700 ksps, Internal Reference No Bypass, V_{IN} = VREF/2

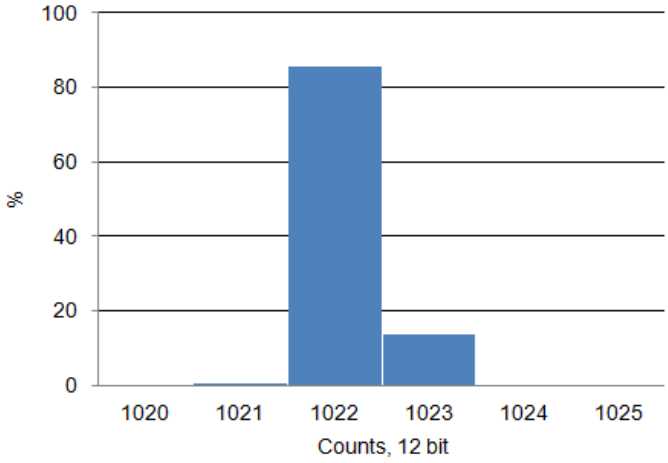

Figure 11-34. SAR ADC Noise Histogram, 1000 samples, 700 ksps, Internal Reference Bypassed, V_{IN} = VREF/2

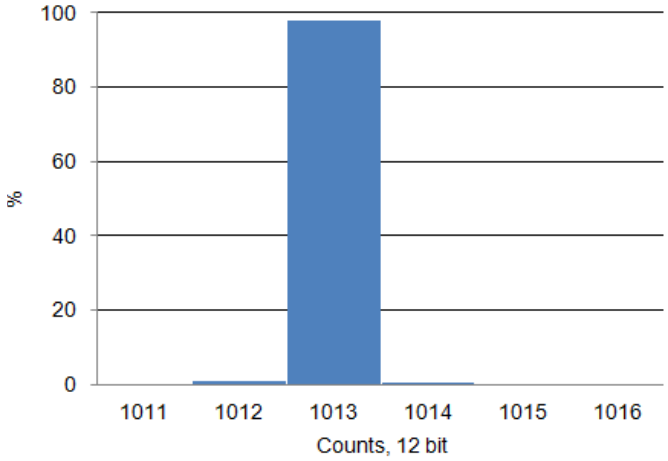

Figure 11-35. SAR ADC Noise Histogram, 1000 samples, 700 ksps, External Reference, V_{IN} = VREF/2

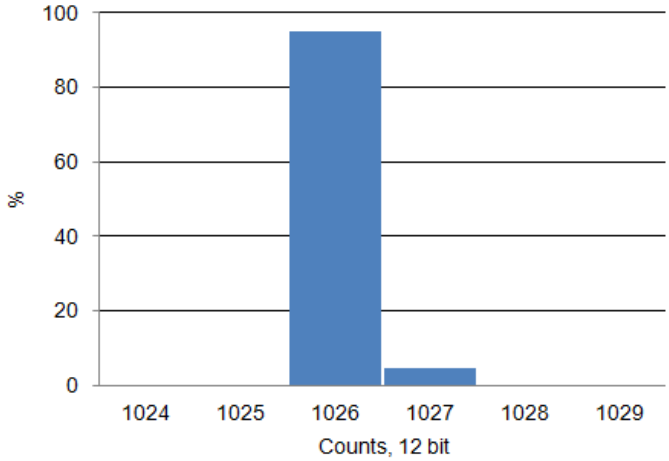

Note
47. Based on device characterization (Not production tested).

11.5.4 Analog Globals

Table 11-26. Analog Globals DC Specifications

Parameter	Description	Conditions	Min	Typ	Max	Units
Rppag	Resistance pin-to-pin through P2[4], AGL0, DSM INP, AGL1, P2[5][48]	V_{DDA} = 3.0 V	–	1500	2200	Ω
		V_{DDA} = 1.71 V	–	1200	1700	Ω
Rppmuxbus	Resistance pin-to-pin through P2[3], amuxbusL, P2[4][48]	V_{DDA} = 3.0 V	–	700	1100	Ω
		V_{DDA} = 1.71 V	–	600	900	Ω

Table 11-27. Analog Globals AC Specifications

Parameter	Description	Conditions	Min	Typ	Max	Units
	Inter-pair crosstalk for analog routes[49, 50]		106	–	–	dB
BWag	Analog globals 3 db bandwidth[50]	V_{DDA} = 3.0 V, 25 °C	–	26	–	MHz

11.5.5 Comparator

Table 11-28. Comparator DC Specifications[51]

Parameter	Description	Conditions	Min	Typ	Max	Units
V_{OS}	Input offset voltage in fast mode	Factory trim, V_{DDA} > 2.7 V, $V_{IN} \geq$ 0.5 V	–		10	mV
	Input offset voltage in slow mode	Factory trim, Vin ≥ 0.5 V	–		9	mV
V_{OS}	Input offset voltage in fast mode	Custom trim	–	–	4	mV
	Input offset voltage in slow mode[51]	Custom trim	–	–	4	mV
V_{OS}	Input offset voltage in ultra low power mode		–	±12	–	mV
TCVos	Temperature coefficient, input offset voltage	V_{CM} = V_{DDA} / 2, fast mode	–	63	85	µV/°C
		V_{CM} = V_{DDA} / 2, slow mode	–	15	20	
V_{HYST}	Hysteresis	Hysteresis enable mode	–	10	32	mV
V_{ICM}	Input common mode voltage	High current / fast mode	V_{SSA}	–	V_{DDA}	V
		Low current / slow mode	V_{SSA}	–	V_{DDA}	V
		Ultra low power mode	V_{SSA}	–	V_{DDA} – 1.15	V
CMRR	Common mode rejection ratio		–	50	–	dB
I_{CMP}	High current mode/fast mode		–	–	400	µA
	Low current mode/slow mode		–	–	100	µA
	Ultra low power mode		–	6	–	µA

Table 11-29. Comparator AC Specifications[51]

Parameter	Description	Conditions	Min	Typ	Max	Units
T_{RESP}	Response time, high current mode	50 mV overdrive, measured pin-to-pin	–	75	110	ns
	Response time, low current mode	50 mV overdrive, measured pin-to-pin	–	155	200	ns
	Response time, ultra low power mode	50 mV overdrive, measured pin-to-pin	–	55	–	µs

Notes
48. Based on device characterization (Not production tested).
49. This value is calculated, not measured.
50. Pin P6[4] to del-sig ADC input; calculated, not measured.
51. The recommended procedure for using a custom trim value for the on-chip comparators are found in the TRM.

11.5.6 Current Digital-to-analog Converter (IDAC)

All specifications are based on use of the low-resistance IDAC output pins (see Pin Descriptions on page 9 for details). See the IDAC component data sheet in PSoC Creator for full electrical specifications and APIs.

Unless otherwise specified, all charts and graphs show typical values.

Table 11-30. IDAC DC Specifications

Parameter	Description	Conditions	Min	Typ	Max	Units
	Resolution		–	–	8	bits
I_{OUT}	Output current at code = 255	Range = 2.04 mA, code = 255, $V_{DDA} \geq 2.7$ V, Rload = 600 Ω	–	2.04	–	mA
		Range = 2.04 mA, High mode, code = 255, $V_{DDA} \leq 2.7$ V, Rload = 300 Ω	–	2.04	–	mA
		Range = 255 µA, code = 255, Rload = 600 Ω	–	255	–	µA
		Range = 31.875 µA, code = 255, Rload = 600 Ω	–	31.875	–	µA
	Monotonicity		–	–	Yes	
Ezs	Zero scale error		–	0	±1	LSB
Eg	Gain error	Range = 2.04 mA	–	–	±2.5	%
		Range = 255 µA	–	–	±2.5	%
		Range = 31.875 µA	–	–	±3.5	%
TC_Eg	Temperature coefficient of gain error	Range = 2.04 mA	–	–	0.045	% / °C
		Range = 255 µA	–	–	0.045	% / °C
		Range = 31.875 µA	–	–	0.05	% / °C
INL	Integral nonlinearity	Sink mode, range = 255 µA, Codes 8 – 255, Rload = 2.4 kΩ, Cload = 15 pF	–	±0.9	±1	LSB
		Source mode, range = 255 µA, Codes 8 – 255, Rload = 2.4 kΩ, Cload = 15 pF	–	±1.2	±1.6	LSB
		Source mode, range = 31.875 µA, Codes 8 - 255, Rload = 20 kΩ, Cload = 15 pF[52]	–	±0.9	±2	LSB
		Sink mode, range = 31.875 µA, Codes 8 - 255, Rload = 20 kΩ, Cload = 15 pF[52]	–	±0.9	±2	LSB
		Source mode, range = 2.04 mA, Codes 8 - 255, Rload = 600 Ω, Cload = 15 pF[52]	–	±0.9	±2	LSB
		Sink mode, range = 2.04 mA, Codes 8 - 255, Rload = 600 Ω, Cload = 15 pF[52]	–	±0.6	±1	LSB

Note
52. Based on device characterization (Not production tested).

Table 11-30. IDAC DC Specifications (continued)

Parameter	Description	Conditions	Min	Typ	Max	Units
DNL	Differential nonlinearity	Sink mode, range = 255 µA, Rload = 2.4 kΩ, Cload = 15 pF	–	±0.3	±1	LSB
		Source mode, range = 255 µA, Rload = 2.4 kΩ, Cload = 15 pF	–	±0.3	±1	LSB
		Source mode, range = 31.875 µA, Rload = 20 kΩ, Cload = 15 pF[53]	–	±0.2	±1	LSB
		Sink mode, range = 31.875 µA, Rload = 20 kΩ, Cload = 15 pF[53]	–	±0.2	±1	LSB
		Source mode, range = 2.0 4 mA, Rload = 600 Ω, Cload = 15 pF[53]	–	±0.2	±1	LSB
		Sink mode, range = 2.0 4 mA, Rload = 600 Ω, Cload = 15 pF[53]	–	±0.2	±1	LSB
Vcompliance	Dropout voltage, source or sink mode	Voltage headroom at max current, Rload to V_{DDA} or Rload to V_{SSA}, Vdiff from V_{DDA}	1	–	–	V
I_{DD}	Operating current, code = 0	Slow mode, source mode, range = 31.875 µA	–	44	100	µA
		Slow mode, source mode, range = 255 µA,	–	33	100	µA
		Slow mode, source mode, range = 2.04 mA	–	33	100	µA
		Slow mode, sink mode, range = 31.875 µA	–	36	100	µA
		Slow mode, sink mode, range = 255 µA	–	33	100	µA
		Slow mode, sink mode, range = 2.04 mA	–	33	100	µA
		Fast mode, source mode, range = 31.875 µA	–	310	500	µA
		Fast mode, source mode, range = 255 µA	–	305	500	µA
		Fast mode, source mode, range = 2.04 mA	–	305	500	µA
		Fast mode, sink mode, range = 31.875 µA	–	310	500	µA
		Fast mode, sink mode, range = 255 µA	–	300	500	µA
		Fast mode, sink mode, range = 2.04 mA	–	300	500	µA

Note
53. Based on device characterization (Not production tested).

Figure 11-36. IDAC INL vs Input Code, Range = 255 µA, Source Mode

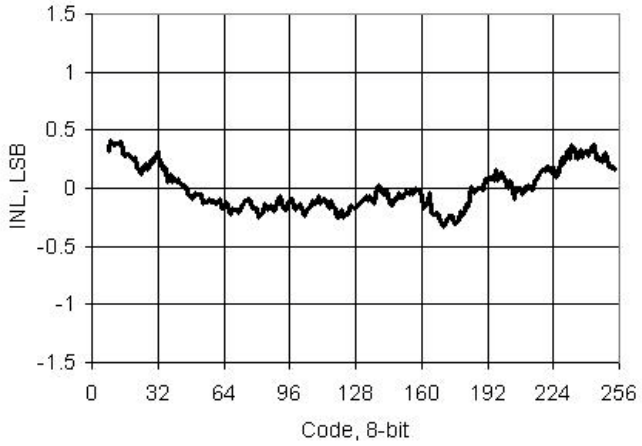

Figure 11-37. IDAC INL vs Input Code, Range = 255 µA, Sink Mode

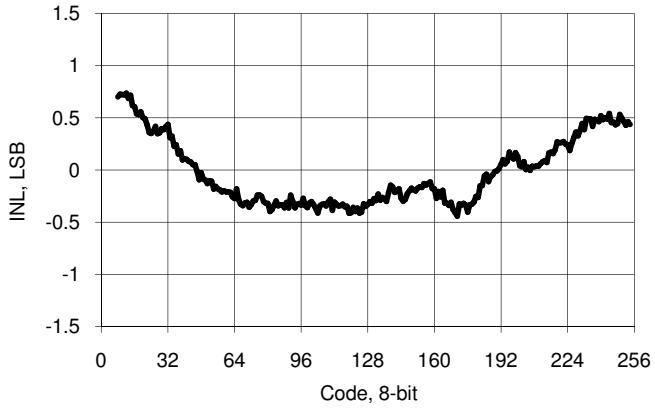

Figure 11-38. IDAC DNL vs Input Code, Range = 255 µA, Source Mode

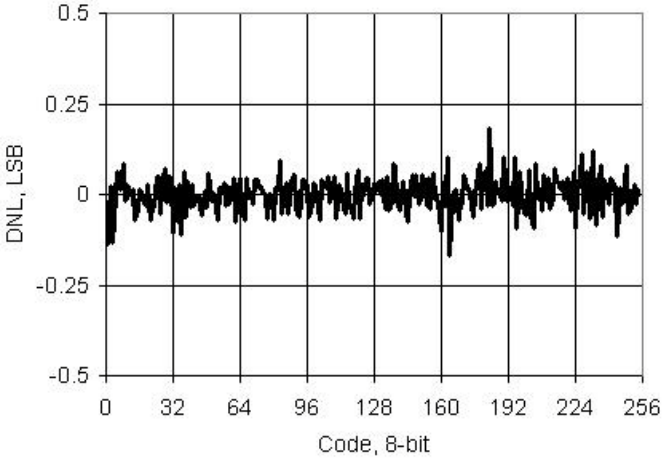

Figure 11-39. IDAC DNL vs Input Code, Range = 255 µA, Sink Mode

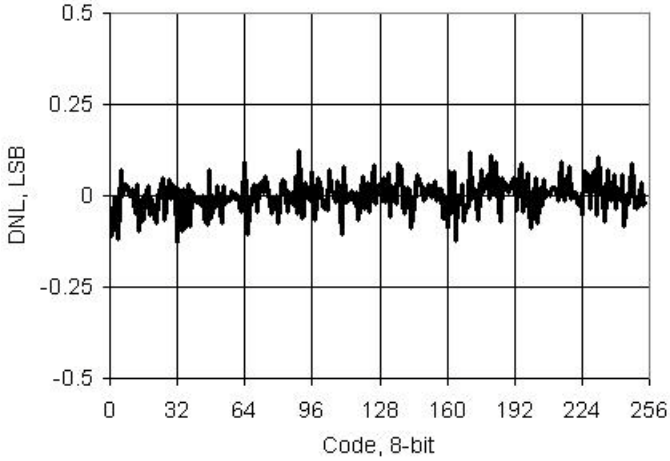

Figure 11-40. IDAC INL vs Temperature, Range = 255 µA, Fast Mode

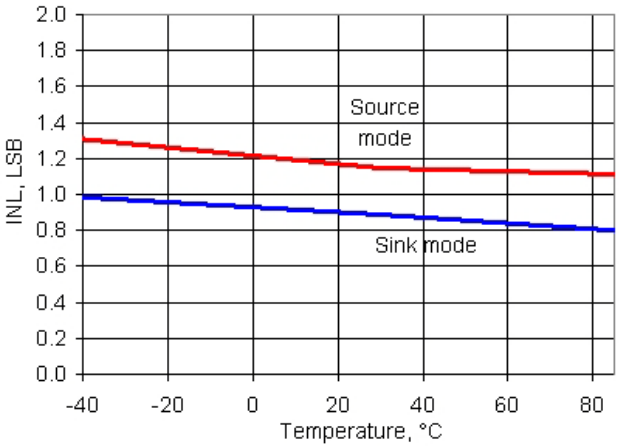

Figure 11-41. IDAC DNL vs Temperature, Range = 255 µA, Fast Mode

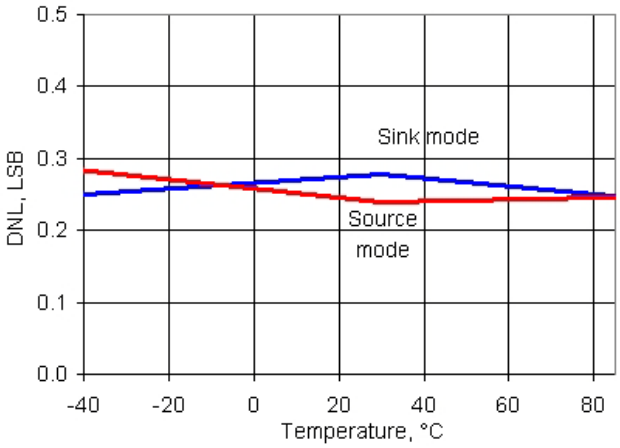

Figure 11-42. IDAC Full Scale Error vs Temperature, Range = 255 µA, Source Mode

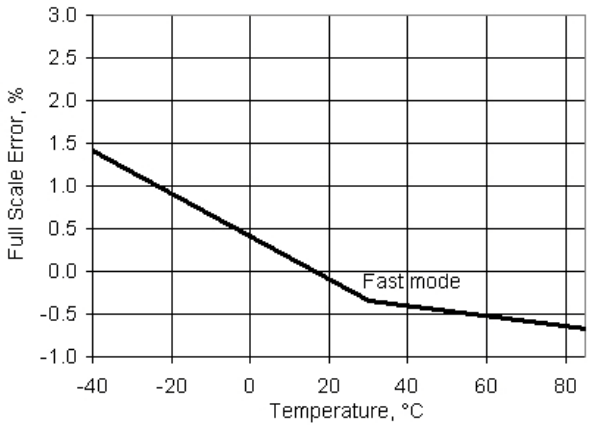

Figure 11-43. IDAC Full Scale Error vs Temperature, Range = 255 µA, Sink Mode

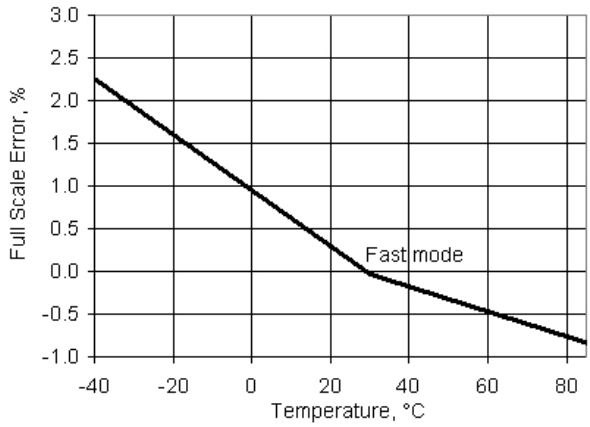

Figure 11-44. IDAC Operating Current vs Temperature, Range = 255 µA, Code = 0, Source Mode

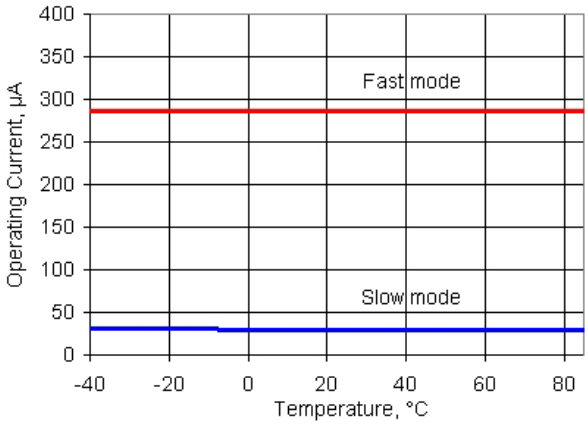

Figure 11-45. IDAC Operating Current vs Temperature, Range = 255 µA, Code = 0, Sink Mode

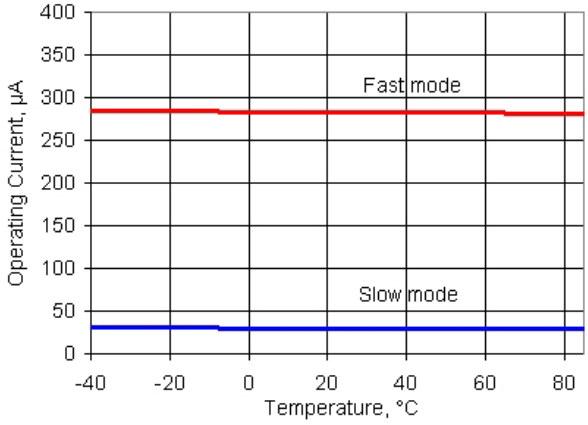

Table 11-31. IDAC AC Specifications[54]

Parameter	Description	Conditions	Min	Typ	Max	Units
F_{DAC}	Update rate		–	–	8	Msps
T_{SETTLE}	Settling time to 0.5 LSB	Range = 31.875 µA, full scale transition, fast mode, 600 Ω 15-pF load	–	–	125	ns
		Range = 255 µA, full scale transition, fast mode, 600 Ω 15-pF load	–	–	125	ns
	Current noise	Range = 255 µA, source mode, fast mode, Vdda = 5 V, 10 kHz	–	340	–	pA/sqrtHz

Note
54. Based on device characterization (Not production tested).

Figure 11-46. IDAC Step Response, Codes 0x40 - 0xC0, 255 µA Mode, Source Mode, Fast Mode, V_{DDA} = 5 V

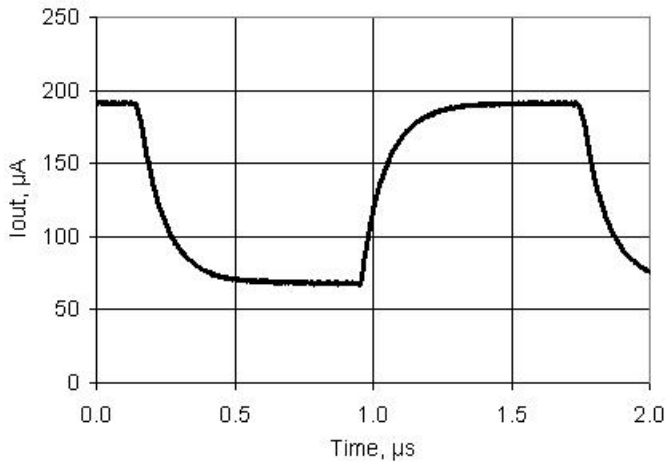

Figure 11-47. IDAC Glitch Response, Codes 0x7F - 0x80, 255 µA Mode, Source Mode, Fast Mode, V_{DDA} = 5 V

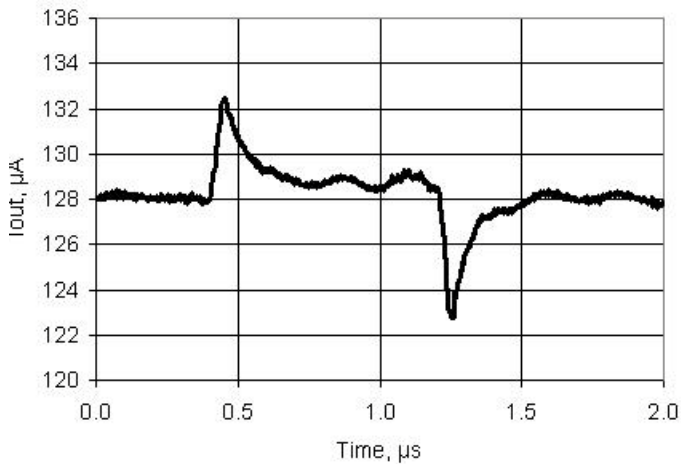

Figure 11-48. IDAC PSRR vs Frequency

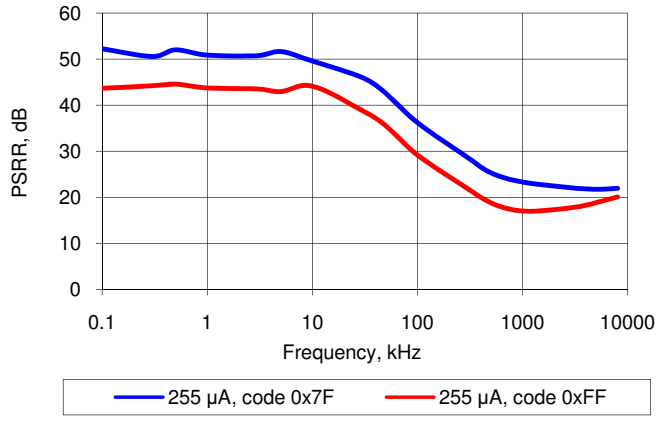

Figure 11-49. IDAC Current Noise, 255 µA Mode, Source Mode, Fast Mode, V_{DDA} = 5 V

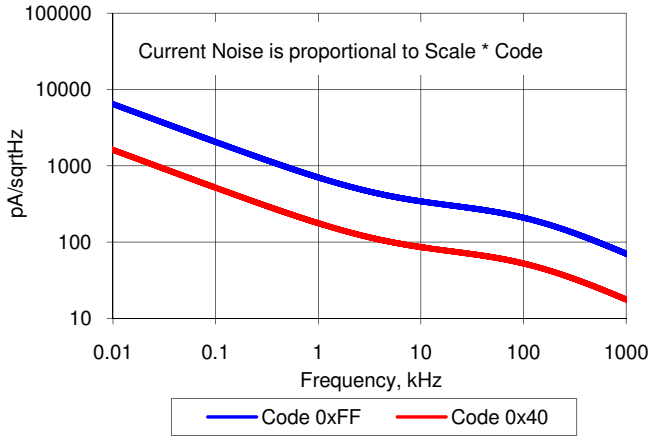

11.5.7 Voltage Digital to Analog Converter (VDAC)

See the VDAC component datasheet in PSoC Creator for full electrical specifications and APIs.

Unless otherwise specified, all charts and graphs show typical values.

Table 11-32. VDAC DC Specifications

Parameter	Description	Conditions	Min	Typ	Max	Units
	Resolution		–	8	–	bits
INL1	Integral nonlinearity	1 V scale	–	±2.1	±2.5	LSB
INL4	Integral nonlinearity[55]	4 V scale	–	±2.1	±2.5	LSB
DNL1	Differential nonlinearity	1 V scale	–	±0.3	±1	LSB
DNL4	Differential nonlinearity[55]	4 V scale	–	±0.3	±1	LSB
Rout	Output resistance	1 V scale	–	4	–	kΩ
		4 V scale	–	16	–	kΩ
V_{OUT}	Output voltage range, code = 255	1 V scale	–	1.02	–	V
		4 V scale, V_{DDA} = 5 V	–	4.08	–	V

Note
55. Based on device characterization (Not production tested).

Table 11-32. VDAC DC Specifications (continued)

Parameter	Description	Conditions	Min	Typ	Max	Units
	Monotonicity		–	–	Yes	–
V_{OS}	Zero scale error		–	0	±0.9	LSB
Eg	Gain error	1 V scale	–	–	±2.5	%
		4 V scale	–	–	±2.5	%
TC_Eg	Temperature coefficient, gain error	1 V scale	–	–	0.03	%FSR / °C
		4 V scale	–	–	0.03	%FSR / °C
I_{DD}	Operating current[56]	Slow mode	–	–	100	µA
		Fast mode	–	–	500	µA

Figure 11-50. VDAC INL vs Input Code, 1 V Mode

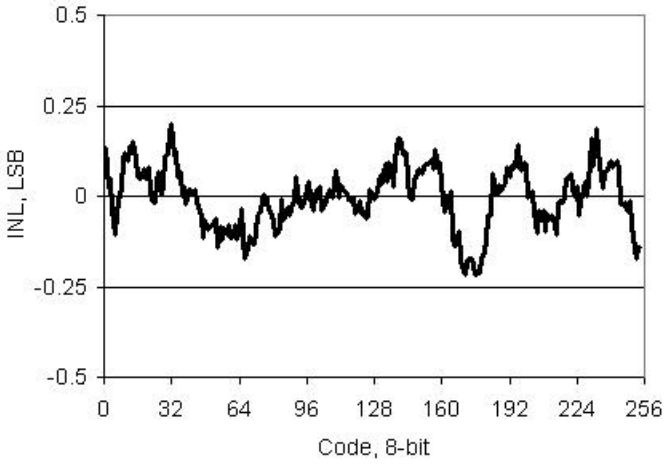

Figure 11-51. VDAC DNL vs Input Code, 1 V Mode

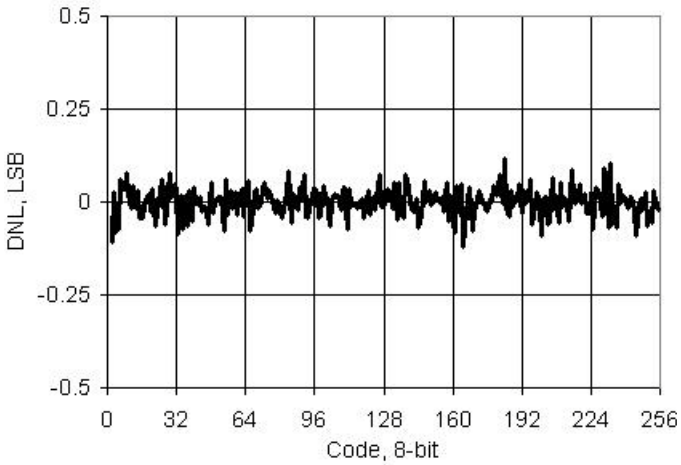

Figure 11-52. VDAC INL vs Temperature, 1 V Mode

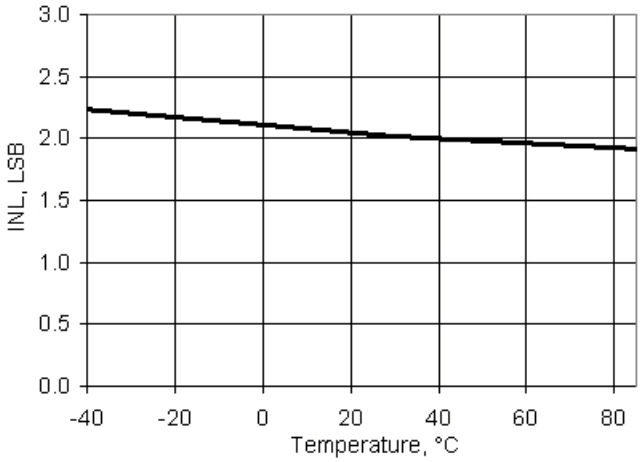

Figure 11-53. VDAC DNL vs Temperature, 1 V Mode

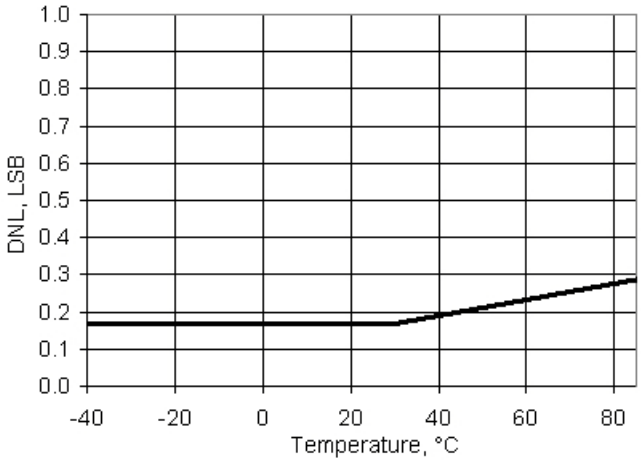

Note
56. Based on device characterization (Not production tested).

Figure 11-54. VDAC Full Scale Error vs Temperature, 1 V Mode

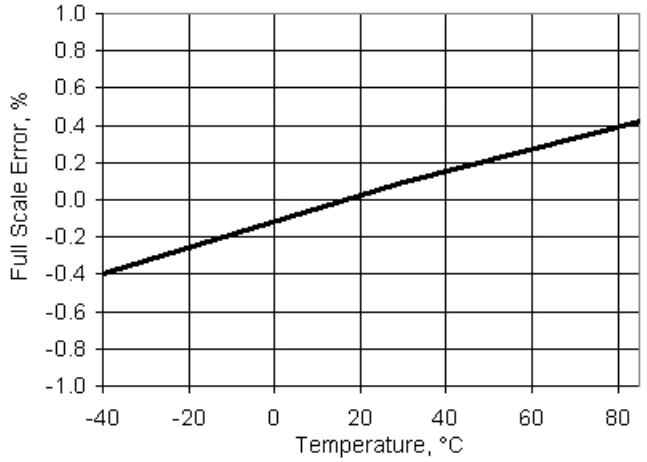

Figure 11-55. VDAC Full Scale Error vs Temperature, 4 V Mode

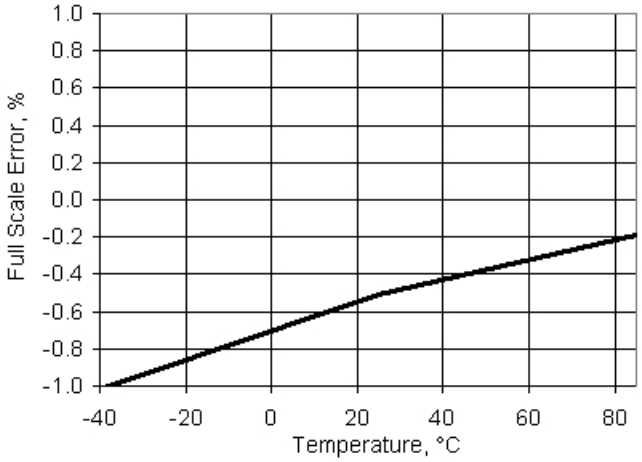

Figure 11-56. VDAC Operating Current vs Temperature, 1V Mode, Slow Mode

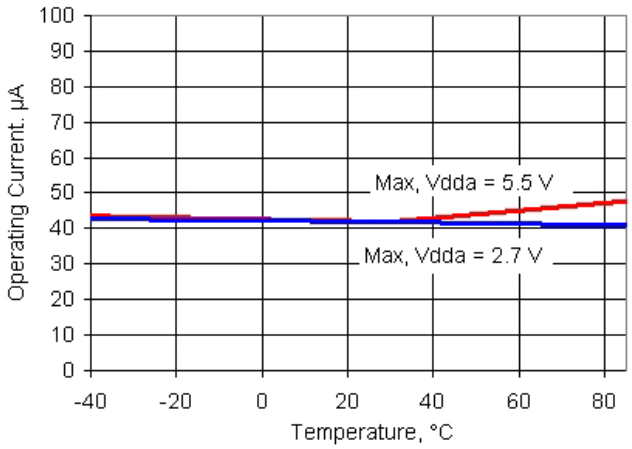

Figure 11-57. VDAC Operating Current vs Temperature, 1 V Mode, Fast Mode

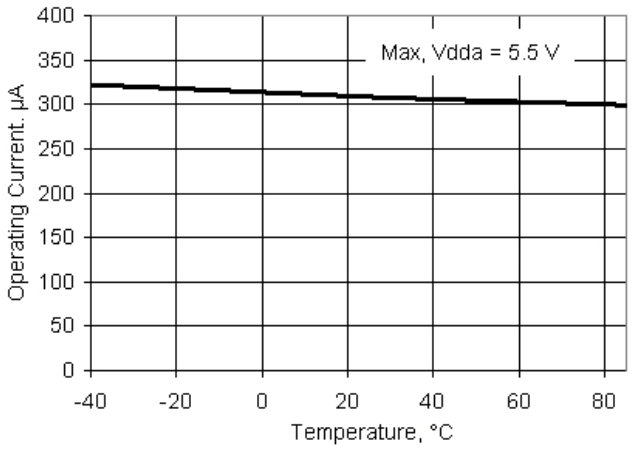

Table 11-33. VDAC AC Specifications[57]

Parameter	Description	Conditions	Min	Typ	Max	Units
F_{DAC}	Update rate	1 V scale	–	–	1000	ksps
		4 V scale	–	–	250	ksps
TsettleP	Settling time to 0.1%, step 25% to 75%	1 V scale, Cload = 15 pF	–	0.45	1	µs
		4 V scale, Cload = 15 pF	–	0.8	3.2	µs
TsettleN	Settling time to 0.1%, step 75% to 25%	1 V scale, Cload = 15 pF	–	0.45	1	µs
		4 V scale, Cload = 15 pF	–	0.7	3	µs
	Voltage noise	Range = 1 V, fast mode, V_{DDA} = 5 V, 10 kHz	–	750	–	nV/sqrtHz

Note
57. Based on device characterization (Not production tested).

Figure 11-58. VDAC Step Response, Codes 0x40 - 0xC0, 1 V Mode, Fast Mode, V_{DDA} = 5 V

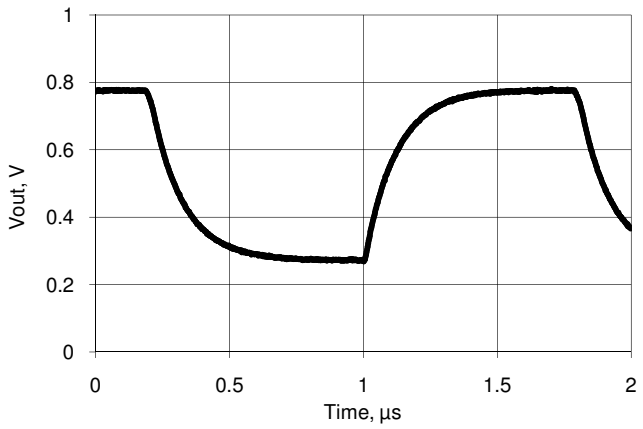

Figure 11-59. VDAC Glitch Response, Codes 0x7F - 0x80, 1 V Mode, Fast Mode, V_{DDA} = 5 V

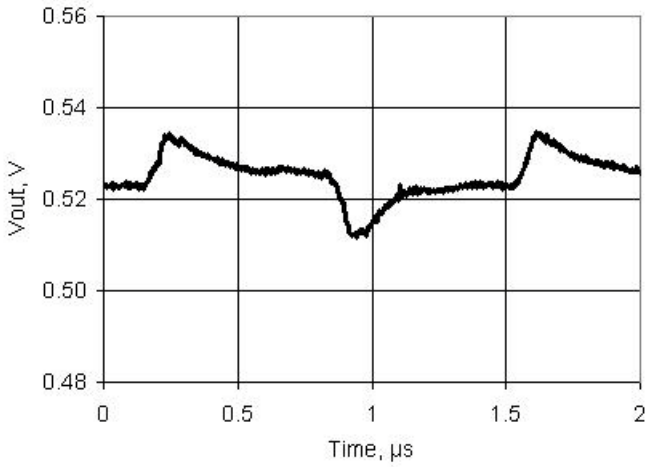

Figure 11-60. VDAC PSRR vs Frequency

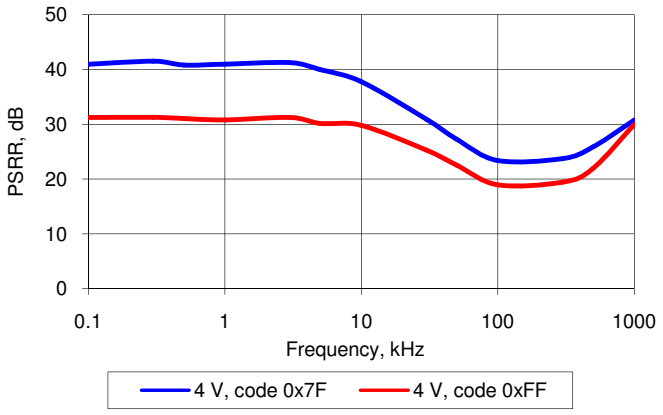

Figure 11-61. VDAC Voltage Noise, 1 V Mode, Fast Mode, V_{DDA} = 5 V

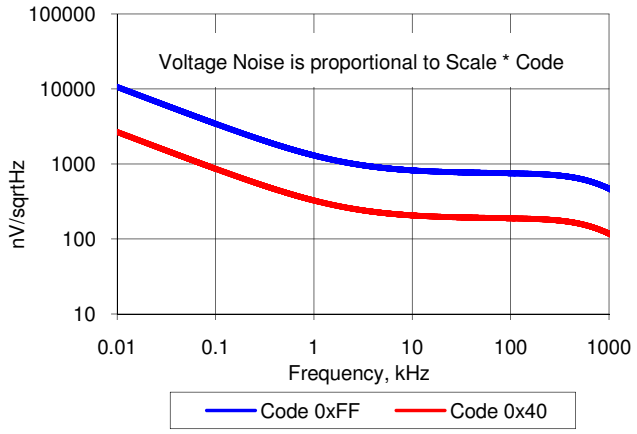

11.5.8 Mixer

The mixer is created using a SC/CT analog block; see the Mixer component datasheet in PSoC Creator for full electrical specifications and APIs.

Table 11-34. Mixer DC Specifications

Parameter	Description	Conditions	Min	Typ	Max	Units
V_{OS}	Input offset voltage	High power mode, V_{IN} = 1.024 V, V_{REF} = 1.024 V	–	–	15	mV
	Quiescent current		–	0.9	2	mA
G	Gain		–	0	–	dB

Table 11-35. Mixer AC Specifications[58]

Parameter	Description	Conditions	Min	Typ	Max	Units
f_{LO}	Local oscillator frequency	Down mixer mode	–	–	4	MHz
f_{in}	Input signal frequency	Down mixer mode	–	–	14	MHz
f_{LO}	Local oscillator frequency	Up mixer mode	–	–	1	MHz
f_{in}	Input signal frequency	Up mixer mode	–	–	1	MHz
SR	Slew rate		3	–	–	V/µs

11.5.9 Transimpedance Amplifier

The TIA is created using a SC/CT analog block; see the TIA component datasheet in PSoC Creator for full electrical specifications and APIs.

Table 11-36. Transimpedance Amplifier (TIA) DC Specifications

Parameter	Description	Conditions	Min	Typ	Max	Units
V_{IOFF}	Input offset voltage		–	–	10	mV
Rconv	Conversion resistance[59]	R = 20K; 40 pF load	–25	–	+35	%
		R = 30K; 40 pF load	–25	–	+35	%
		R = 40K; 40 pF load	–25	–	+35	%
		R = 80K; 40 pF load	–25	–	+35	%
		R = 120K; 40 pF load	–25	–	+35	%
		R = 250K; 40 pF load	–25	–	+35	%
		R= 500K; 40 pF load	–25	–	+35	%
		R = 1M; 40 pF load	–25	–	+35	%
	Quiescent current[58]		–	1.1	2	mA

Table 11-37. Transimpedance Amplifier (TIA) AC Specifications[58]

Parameter	Description	Conditions	Min	Typ	Max	Units
BW	Input bandwidth (–3 dB)	R = 20K; –40 pF load	1200	–	–	kHz
		R = 120K; –40 pF load	240	–	–	kHz
		R = 1M; –40 pF load	25	–	–	kHz

Notes
58. Based on device characterization (Not production tested).
59. Conversion resistance values are not calibrated. Calibrated values and details about calibration are provided in PSoC Creator component datasheets. External precision resistors can also be used.

11.5.10 Programmable Gain Amplifier

The PGA is created using a SC/CT analog block; see the PGA component datasheet in PSoC Creator for full electrical specifications and APIs.

Unless otherwise specified, operating conditions are:

- Operating temperature = 25 °C for typical values
- Unless otherwise specified, all charts and graphs show typical values

Table 11-38. PGA DC Specifications

Parameter	Description	Conditions	Min	Typ	Max	Units
Vin	Input voltage range	Power mode = minimum	Vssa	–	V_{DDA}	V
Vos	Input offset voltage	Power mode = high, gain = 1	–	–	10	mV
TCVos	Input offset voltage drift with temperature	Power mode = high, gain = 1	–	–	±30	µV/°C
Ge1	Gain error, gain = 1		–	–	±0.15	%
Ge16	Gain error, gain = 16		–	–	±2.5	%
Ge50	Gain error, gain = 50		–	–	±5	%
Vonl	DC output nonlinearity	Gain = 1	–	–	±0.01	% of FSR
Cin	Input capacitance		–	–	7	pF
Voh	Output voltage swing	Power mode = high, gain = 1, Rload = 100 kΩ to V_{DDA} / 2	V_{DDA} – 0.15	–	–	V
Vol	Output voltage swing	Power mode = high, gain = 1, Rload = 100 kΩ to V_{DDA} / 2	–	–	V_{SSA} + 0.15	V
Vsrc	Output voltage under load	Iload = 250 µA, $V_{DDA} \geq$ 2.7 V, power mode = high	–	–	300	mV
Idd	Operating current[60]	Power mode = high	–	1.5	1.65	mA
PSRR	Power supply rejection ratio		48	–	–	dB

Figure 11-62. PGA Voffset Histogram, 4096 samples/ 1024 parts

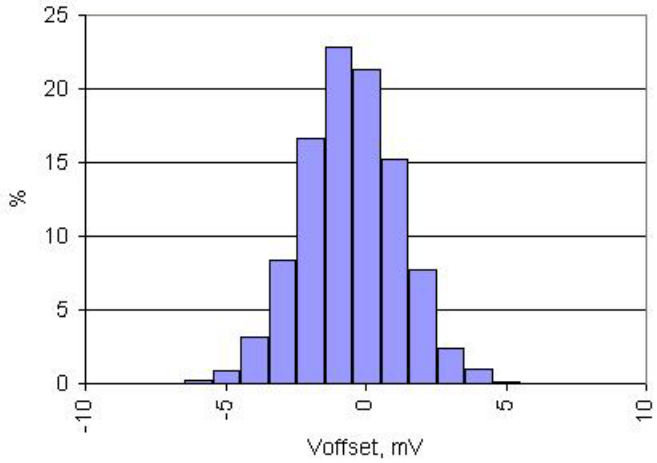

Note
60. Based on device characterization (Not production tested).

Table 11-39. PGA AC Specifications[61]

Parameter	Description	Conditions	Min	Typ	Max	Units
BW1	–3 dB bandwidth	Power mode = high, gain = 1, input = 100 mV peak-to-peak	6.7	8	–	MHz
SR1	Slew rate	Power mode = high, gain = 1, 20% to 80%	3	–	–	V/µs
e_n	Input noise density	Power mode = high, V_{DDA} = 5 V, at 100 kHz	–	43	–	nV/sqrtHz

Figure 11-63. Bandwidth vs. Temperature, at Different Gain Settings, Power Mode = High

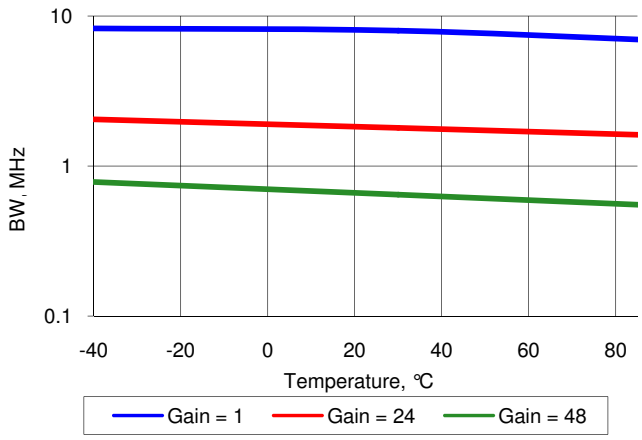

Figure 11-64. Noise vs. Frequency, Vdda = 5 V, Power Mode = High

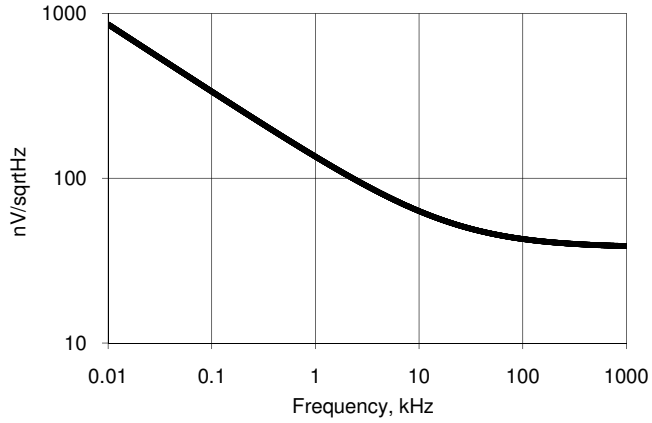

11.5.11 Temperature Sensor

Table 11-40. Temperature Sensor Specifications

Parameter	Description	Conditions	Min	Typ	Max	Units
	Temp sensor accuracy	Range: –40 °C to +85 °C	–	±5	–	°C

11.5.12 LCD Direct Drive

Table 11-41. LCD Direct Drive DC Specifications[61]

Parameter	Description	Conditions	Min	Typ	Max	Units
I_{CC}	LCD Block (no glass)	Device sleep mode with wakeup at 400 Hz rate to refresh LCD, bus, clock = 3MHz, Vddio = Vdda = 3 V, 8 commons, 16 segments, 1/5 duty cycle, 40 Hz frame rate, no glass connected	–	81	–	µA
I_{CC_SEG}	Current per segment driver	Strong drive mode	–	260	–	µA
V_{BIAS}	LCD bias range (V_{BIAS} refers to the main output voltage(V0) of LCD DAC)	$V_{DDA} \geq 3$ V and $V_{DDA} \geq V_{BIAS}$	2	–	5	V
	LCD bias step size	$V_{DDA} \geq 3$ V and $V_{DDA} \geq V_{BIAS}$	–	9.1 × V_{DDA}	–	mV
	LCD capacitance per segment/ common driver	Drivers may be combined	–	500	5000	pF
	Maximum segment DC offset	Vdda ≥ 3V and Vdda ≥ Vbias	–	–	20	mV
I_{OUT}	Output drive current per segment driver)	V_{DDIO} = 5.5 V, strong drive mode	355	–	710	µA

Note
61. Based on device characterization (Not production tested).

Table 11-42. LCD Direct Drive AC Specifications[62]

Parameter	Description	Conditions	Min	Typ	Max	Units
f_{LCD}	LCD frame rate		10	50	150	Hz

11.6 Digital Peripherals

Specifications are valid for –40 °C ≤ T_A ≤ 85 °C and T_J ≤ 100 °C, except where noted. Specifications are valid for 1.71 V to 5.5 V, except where noted.

11.6.1 Timer

The following specifications apply to the Timer/Counter/PWM peripheral in timer mode. Timers can also be implemented in UDBs; for more information, see the Timer component datasheet in PSoC Creator.

Table 11-43. Timer DC Specifications[62]

Parameter	Description	Conditions	Min	Typ	Max	Units
	Block current consumption	16-bit timer, at listed input clock frequency	–	–	–	µA
	3 MHz		–	15	–	µA
	12 MHz		–	60	–	µA
	48 MHz		–	260	–	µA
	67 MHz		–	350	–	µA

Table 11-44. Timer AC Specifications[62]

Parameter	Description	Conditions	Min	Typ	Max	Units
	Operating frequency		DC	–	67.01	MHz
	Capture pulse width (Internal)[63]		15	–	–	ns
	Capture pulse width (external)		30	–	–	ns
	Timer resolution[63]		15	–	–	ns
	Enable pulse width[63]		15	–	–	ns
	Enable pulse width (external)		30	–	–	ns
	Reset pulse width[63]		15	–	–	ns
	Reset pulse width (external)		30	–	–	ns

11.6.2 Counter

The following specifications apply to the Timer/Counter/PWM peripheral, in counter mode. Counters can also be implemented in UDBs; for more information, see the Counter component datasheet in PSoC Creator.

Table 11-45. Counter DC Specifications[62]

Parameter	Description	Conditions	Min	Typ	Max	Units
	Block current consumption	16-bit counter, at listed input clock frequency	–	–	–	µA
	3 MHz		–	15	–	µA
	12 MHz		–	60	–	µA
	48 MHz		–	260	–	µA
	67 MHz		–	350	–	µA

Notes
62. Based on device characterization (Not production tested).
63. For correct operation, the minimum Timer/Counter/PWM input pulse width is the period of bus clock.

Table 11-46. Counter AC Specifications[64]

Parameter	Description	Conditions	Min	Typ	Max	Units
	Operating frequency		DC	–	67.01	MHz
	Capture pulse[65]		15	–	–	ns
	Resolution[65]		15	–	–	ns
	Pulse width[65]		15	–	–	ns
	Pulse width (external)		30			ns
	Enable pulse width[65]		15	–	–	ns
	Enable pulse width (external)		30	–	–	ns
	Reset pulse width[65]		15	–	–	ns
	Reset pulse width (external)		30	–	–	ns

11.6.3 Pulse Width Modulation

The following specifications apply to the Timer/Counter/PWM peripheral, in PWM mode. PWM components can also be implemented in UDBs; for more information, see the PWM component datasheet in PSoC Creator.

Table 11-47. PWM DC Specifications[64]

Parameter	Description	Conditions	Min	Typ	Max	Units
	Block current consumption	16-bit PWM, at listed input clock frequency	–	–	–	µA
	3 MHz		–	15	–	µA
	12 MHz		–	60	–	µA
	48 MHz		–	260	–	µA
	67 MHz		–	350	–	µA

Table 11-48. PWM AC Specifications[64]

Parameter	Description	Conditions	Min	Typ	Max	Units
	Operating frequency		DC	–	67.01	MHz
	Pulse width[65]		15	–	–	ns
	Pulse width (external)		30	–	–	ns
	Kill pulse width[65]		15	–	–	ns
	Kill pulse width (external)		30	–	–	ns
	Enable pulse width[65]		15	–	–	ns
	Enable pulse width (external)		30	–	–	ns
	Reset pulse width[65]		15	–	–	ns
	Reset pulse width (external)		30	–	–	ns

11.6.4 I^2C

Table 11-49. Fixed I^2C DC Specifications[64]

Parameter	Description	Conditions	Min	Typ	Max	Units
	Block current consumption	Enabled, configured for 100 kbps	–	–	250	µA
		Enabled, configured for 400 kbps	–	–	260	µA

Notes
64. Based on device characterization (Not production tested).
65. For correct operation, the minimum Timer/Counter/PWM input pulse width is the period of bus clock.

Table 11-50. Fixed I²C AC Specifications[68]

Parameter	Description	Conditions	Min	Typ	Max	Units
	Bit rate		–	–	1	Mbps

11.6.5 Controller Area Network

Table 11-55. CAN DC Specifications[66, 67]

Parameter	Description	Conditions	Min	Typ	Max	Units
I_{DD}	Block current consumption		–	–	200	µA

Table 11-56. CAN AC Specifications[66, 67]

Parameter	Description	Conditions	Min	Typ	Max	Units
	Bit rate	Minimum 8 MHz clock	–	–	1	Mbit

11.6.6 Digital Filter Block

Table 11-1. DFB DC Specifications[68]

Parameter	Description	Conditions	Min	Typ	Max	Units
	DFB operating current	64-tap FIR at F_{DFB}				
		500 kHz (6.7 ksps)	–	0.16	0.27	mA
		1 MHz (13.4 ksps)	–	0.33	0.53	mA
		10 MHz (134 ksps)	–	3.3	5.3	mA
		48 MHz (644 ksps)	–	15.7	25.5	mA
		67 MHz (900 ksps)	–	21.8	35.6	mA

Table 11-2. DFB AC Specifications[68]

Parameter	Description	Conditions	Min	Typ	Max	Units
F_{DFB}	DFB operating frequency		DC	–	67.01	MHz

Notes
66. Based on device characterization (Not production tested).
67. Refer to ISO 11898 specification for details.

11.6.7 USB

Table 11-3. USB DC Specifications

Parameter	Description	Conditions	Min	Typ	Max	Units
V_{USB_5}	Device supply for USB operation	USB configured, USB regulator enabled	4.35	–	5.25	V
$V_{USB_3.3}$		USB configured, USB regulator bypassed	3.15	–	3.6	V
V_{USB_3}		USB configured, USB regulator bypassed[68]	2.85	–	3.6	V
$I_{USB_Configured}$	Device supply current in device active mode, bus clock and IMO = 24 MHz	V_{DDD} = 5 V, F_{CPU} = 1.5 MHz	–	10	–	mA
		V_{DDD} = 3.3 V, F_{CPU} = 1.5 MHz	–	8	–	mA
$I_{USB_Suspended}$	Device supply current in device sleep mode	V_{DDD} = 5 V, connected to USB host, PICU configured to wake on USB resume signal	–	0.5	–	mA
		V_{DDD} = 5 V, disconnected from USB host	–	0.3	–	mA
		V_{DDD} = 3.3 V, connected to USB host, PICU configured to wake on USB resume signal	–	0.5	–	mA
		V_{DDD} = 3.3 V, disconnected from USB host	–	0.3	–	mA

Note
68. Rise/fall time matching (TR) not guaranteed, see Table 11-15 on page 76.

11.6.8 Universal Digital Blocks (UDBs)

PSoC Creator provides a library of pre-built and tested standard digital peripherals (UART, SPI, LIN, PRS, CRC, timer, counter, PWM, AND, OR, and so on) that are mapped to the UDB array. See the component datasheets in PSoC Creator for full AC/DC specifications, APIs, and example code.

Table 11-4. UDB AC Specifications[69]

Parameter	Description	Conditions	Min	Typ	Max	Units
Datapath Performance						
F_{MAX_TIMER}	Maximum frequency of 16-bit timer in a UDB pair		–	–	67.01	MHz
F_{MAX_ADDER}	Maximum frequency of 16-bit adder in a UDB pair		–	–	67.01	MHz
F_{MAX_CRC}	Maximum frequency of 16-bit CRC/PRS in a UDB pair		–	–	67.01	MHz
PLD Performance						
F_{MAX_PLD}	Maximum frequency of a two-pass PLD function in a UDB pair		–	–	67.01	MHz
Clock to Output Performance						
t_{CLK_OUT}	Propagation delay for clock in to data out, see Figure 11-57.	25 °C, $V_{DDD} \geq 2.7$ V	–	20	25	ns
t_{CLK_OUT}	Propagation delay for clock in to data out, see Figure 11-57.	Worst-case placement, routing, and pin selection	–	–	55	ns

Figure 11-57. Clock to Output Performance

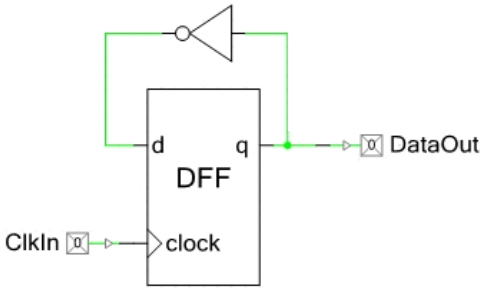

Note
69. Based on device characterization (Not production tested).

11.7 Memory

Specifications are valid for –40 °C ≤ T_A ≤ 85 °C and T_J ≤ 100 °C, except where noted. Specifications are valid for 1.71 V to 5.5 V, except where noted.

11.7.1 Flash

Table 11-5. Flash DC Specifications

Parameter	Description	Conditions	Min	Typ	Max	Units
	Erase and program voltage	V_{DDD} pin	1.71	–	5.5	V

Table 11-6. Flash AC Specifications

Parameter	Description	Conditions	Min	Typ	Max	Units
T_{WRITE}	Row write time (erase + program)		–	15	20	ms
T_{ERASE}	Row erase time		–	10	13	ms
	Row program time		–	5	7	ms
T_{BULK}	Bulk erase time (256 KB)		–	–	140	ms
	Sector erase time (16 KB)		–	–	15	ms
T_{PROG}	Total device programming time	No overhead[70]	–	5	7.5	seconds
	Flash data retention time, retention period measured from last erase cycle	Average ambient temp. T_A ≤ 55 °C, 100 K erase/program cycles	20	–	–	years
		Average ambient temp. T_A ≤ 85 °C, 10 K erase/program cycles	10	–	–	

11.7.2 EEPROM

Table 11-7. EEPROM DC Specifications

Parameter	Description	Conditions	Min	Typ	Max	Units
	Erase and program voltage		1.71	–	5.5	V

Table 11-8. EEPROM AC Specifications

Parameter	Description	Conditions	Min	Typ	Max	Units
T_{WRITE}	Single row erase/write cycle time		–	10	20	ms
	EEPROM data retention time, retention period measured from last erase cycle	Average ambient temp, T_A ≤ 25 °C, 1M erase/program cycles	20	–	–	years
		Average ambient temp, T_A ≤ 55 °C, 100 K erase/program cycles	20	–	–	
		Average ambient temp. T_A ≤ 85 °C, 10 K erase/program cycles	10	–	–	

Note
70. See PSoC 5 Device Programming Specifications for a description of a low-overhead method of programming PSoC 5 flash.

11.7.3 Nonvolatile Latches (NVL)

Table 11-9. NVL DC Specifications

Parameter	Description	Conditions	Min	Typ	Max	Units
	Erase and program voltage	V_{DDD} pin	1.71	–	5.5	V

Table 11-10. NVL AC Specifications

Parameter	Description	Conditions	Min	Typ	Max	Units
	NVL endurance	Programmed at 25 °C	1K	–	–	program/ erase cycles
		Programmed at 0 °C to 70 °C	100	–	–	program/ erase cycles
	NVL data retention time	Average ambient temp. $T_A \leq 55$ °C	20	–	–	years
		Average ambient temp. $T_A \leq 85$ °C	10	–	–	years

11.7.4 SRAM

Table 11-11. SRAM DC Specifications

Parameter	Description	Conditions	Min	Typ	Max	Units
V_{SRAM}	SRAM retention voltage[71]		1.2	–	–	V

Table 11-12. SRAM AC Specifications

Parameter	Description	Conditions	Min	Typ	Max	Units
F_{SRAM}	SRAM operating frequency		DC	–	67.01	MHz

Note
71. Based on device characterization (Not production tested).

11.7.5 External Memory Interface

Figure 11-58. Asynchronous Write and Read Cycle Timing, No Wait States

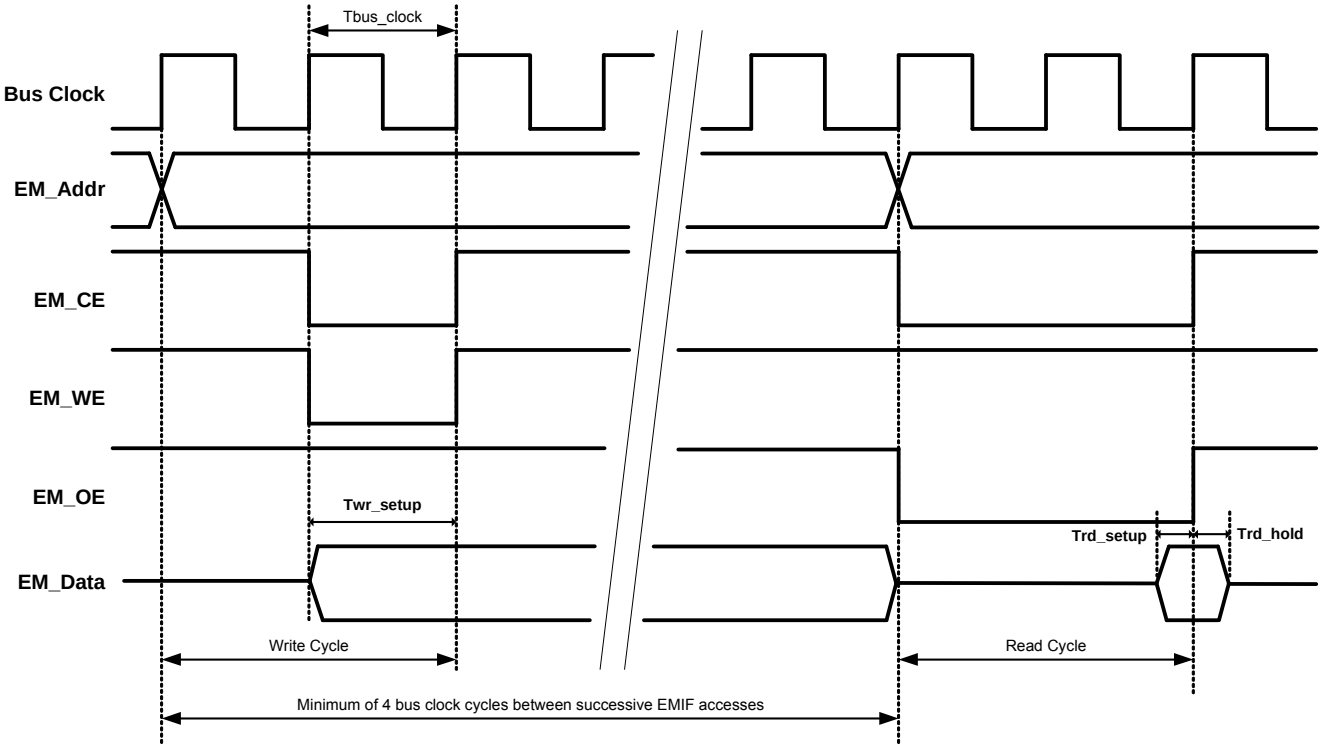

Table 11-65. Asynchronous Write and Read Timing Specifications[72]

Parameter	Description	Conditions	Min	Typ	Max	Units
Fbus_clock	Bus clock frequency[73]		–	–	33	MHz
Tbus_clock	Bus clock period[74]		30.3	–	–	ns
Twr_Setup	Time from EM_data valid to rising edge of EM_WE and EM_CE		Tbus_clock – 10	–	–	ns
Trd_setup	Time that EM_data must be valid before rising edge of EM_OE		5	–	–	ns
Trd_hold	Time that EM_data must be valid after rising edge of EM_OE		5	–	–	ns

Notes
72. Based on device characterization (Not production tested).
73. EMIF signal timings are limited by GPIO frequency limitations. See "GPIO" section on page 69.
74. EMIF output signals are generally synchronized to bus clock, so EMIF signal timings are dependent on bus clock frequency.

Figure 11-67. Synchronous Write and Read Cycle Timing, No Wait States

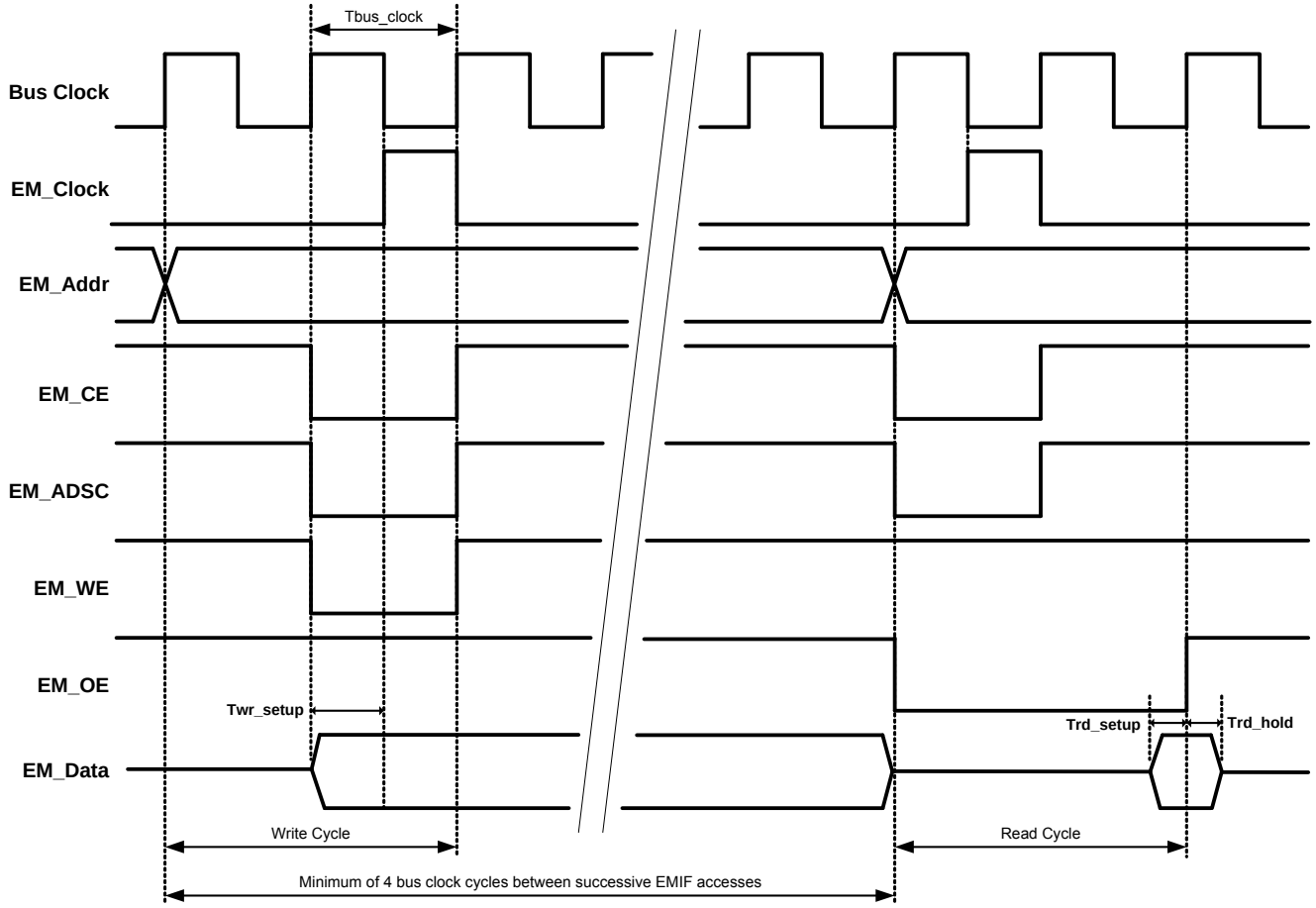

Table 11-66. Synchronous Write and Read Timing Specifications[75]

Parameter	Description	Conditions	Min	Typ	Max	Units
Fbus_clock	Bus clock frequency[76]		–	–	33	MHz
Tbus_clock	Bus clock period[77]		30.3	–	–	ns
Twr_Setup	Time from EM_data valid to rising edge of EM_Clock		Tbus_clock – 10	–	–	ns
Trd_setup	Time that EM_data must be valid before rising edge of EM_OE		5	–	–	ns
Trd_hold	Time that EM_data must be valid after rising edge of EM_OE		5	–	–	ns

Notes
75. Based on device characterization (Not production tested).
76. EMIF signal timings are limited by GPIO frequency limitations. See "GPIO" section on page 69.
77. EMIF output signals are generally synchronized to bus clock, so EMIF signal timings are dependent on bus clock frequency.

11.8 PSoC System Resources

Specifications are valid for –40 °C ≤ T_A ≤ 85 °C and T_J ≤ 100 °C, except where noted. Specifications are valid for 1.71 V to 5.5 V, except where noted.

11.8.1 POR with Brown Out

For brown out detect in regulated mode, V_{DDD} and V_{DDA} must be ≥ 2.0 V. Brown out detect is not available in externally regulated mode.

Table 11-67. Precise Low-Voltage Reset (PRES) with Brown Out DC Specifications

Parameter	Description	Conditions	Min	Typ	Max	Units
PRESR	Rising trip voltage	Factory trim	1.64	–	1.68	V
PRESF	Falling trip voltage		1.62	–	1.66	V

Power On Reset (POR) with Brown Out AC Specifications[78]

Parameter	Description	Conditions	Min	Typ	Max	Units
PRES_TR[79]	Response time		–	–	0.5	µs
	V_{DDD}/V_{DDA} droop rate	Sleep mode	–	5	–	V/sec

11.8.2 Voltage Monitors

Table 11-68. Voltage Monitors DC Specifications

Parameter	Description	Conditions	Min	Typ	Max	Units
LVI	Trip voltage					
	LVI_A/D_SEL[3:0] = 0000b		1.68	1.73	1.77	V
	LVI_A/D_SEL[3:0] = 0001b		1.89	1.95	2.01	V
	LVI_A/D_SEL[3:0] = 0010b		2.14	2.20	2.27	V
	LVI_A/D_SEL[3:0] = 0011b		2.38	2.45	2.53	V
	LVI_A/D_SEL[3:0] = 0100b		2.62	2.71	2.79	V
	LVI_A/D_SEL[3:0] = 0101b		2.87	2.95	3.04	V
	LVI_A/D_SEL[3:0] = 0110b		3.11	3.21	3.31	V
	LVI_A/D_SEL[3:0] = 0111b		3.35	3.46	3.56	V
	LVI_A/D_SEL[3:0] = 1000b		3.59	3.70	3.81	V
	LVI_A/D_SEL[3:0] = 1001b		3.84	3.95	4.07	V
	LVI_A/D_SEL[3:0] = 1010b		4.08	4.20	4.33	V
	LVI_A/D_SEL[3:0] = 1011b		4.32	4.45	4.59	V
	LVI_A/D_SEL[3:0] = 1100b		4.56	4.70	4.84	V
	LVI_A/D_SEL[3:0] = 1101b		4.83	4.98	5.13	V
	LVI_A/D_SEL[3:0] = 1110b		5.05	5.21	5.37	V
	LVI_A/D_SEL[3:0] = 1111b		5.30	5.47	5.63	V
HVI	Trip voltage		5.57	5.75	5.92	V

Voltage Monitors AC Specifications

Parameter	Description	Conditions	Min	Typ	Max	Units
LVI_tr[79]	Response time		–	–	1	µs

Notes
78. Based on device characterization (Not production tested).
79. This value is calculated, not measured.

11.8.3 Interrupt Controller

Table 11-69. Interrupt Controller AC Specifications

Parameter	Description	Conditions	Min	Typ	Max	Units
	Delay from interrupt signal input to ISR code execution from main line code[80]		–	–	12	Tcy CPU
	Delay from interrupt signal input to ISR code execution from ISR code (tail-chaining)[80]		–	–	6	Tcy CPU

11.8.4 JTAG Interface

Figure 11-68. JTAG Interface Timing

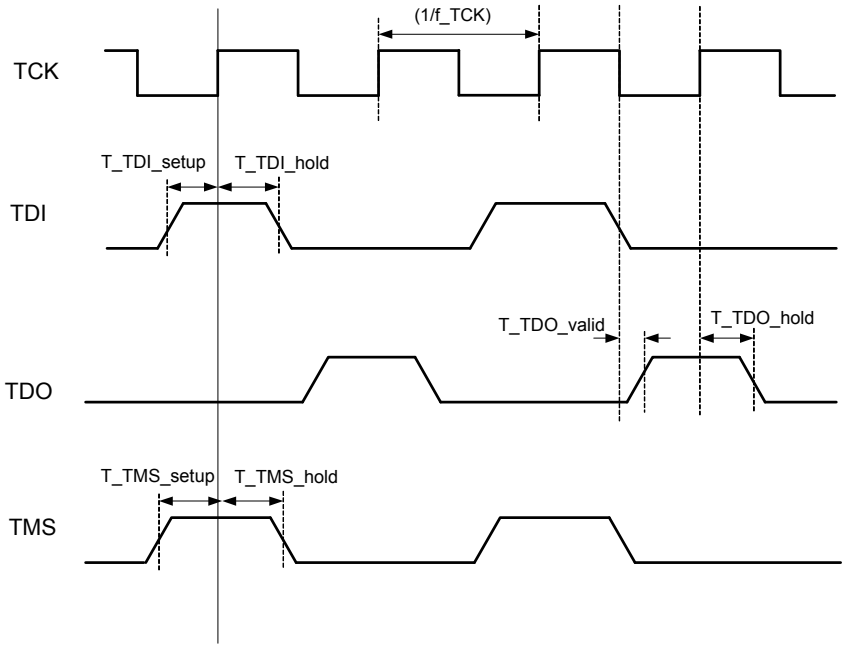

Table 11-70. JTAG Interface AC Specifications[81]

Parameter	Description	Conditions	Min	Typ	Max	Units
f_TCK	TCK frequency	$3.3\ V \le V_{DDD} \le 5\ V$	–	–	12[82]	MHz
		$1.71\ V \le V_{DDD} < 3.3\ V$	–	–	7[82]	MHz
T_TDI_setup	TDI setup before TCK high		(T/10) – 5	–	–	ns
T_TMS_setup	TMS setup before TCK high		T/4	–	–	
T_TDI_hold	TDI, TMS hold after TCK high	T = 1/f_TCK max	T/4	–	–	
T_TDO_valid	TCK low to TDO valid	T = 1/f_TCK max	–	–	2T/5	
T_TDO_hold	TDO hold after TCK high	T = 1/f_TCK max	T/4	–	–	
T_nTRST	Minimum nTRST pulse width	f_TCK = 2 MHz	8	–	–	ns

Notes
80. ARM Cortex-M3 NVIC spec. Visit www.arm.com for detailed documentation about the Cortex-M3 CPU.
81. Based on device characterization (Not production tested).
82. f_TCK must also be no more than 1/3 CPU clock frequency.

11.8.5 SWD Interface

Figure 11-69. SWD Interface Timing

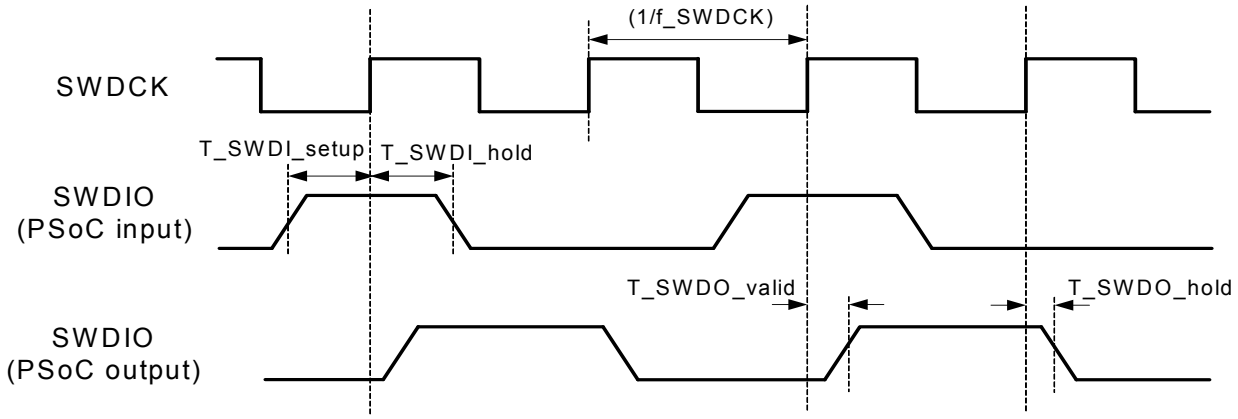

Table 11-71. SWD Interface AC Specifications[83]

Parameter	Description	Conditions	Min	Typ	Max	Units
f_SWDCK	SWDCLK frequency	3.3 V ≤ V_{DDD} ≤ 5 V	–	–	12[84]	MHz
		1.71 V ≤ V_{DDD} < 3.3 V	–	–	7[84]	MHz
		1.71 V ≤ V_{DDD} < 3.3 V, SWD over USBIO pins	–	–	5.5[84]	MHz
T_SWDI_setup	SWDIO input setup before SWDCK high	T = 1/f_SWDCK max	T/4	–	–	
T_SWDI_hold	SWDIO input hold after SWDCK high	T = 1/f_SWDCK max	T/4	–	–	
T_SWDO_valid	SWDCK high to SWDIO output	T = 1/f_SWDCK max	–	–	T/2	
T_SWDO_hold	SWDIO output hold after SWDCK high	T = 1/f_SWDCK max	1	–	–	ns

11.8.6 TPIU Interface

Table 11-72. TPIU Interface AC Specifications[83]

Parameter	Description	Conditions	Min	Typ	Max	Units
	TRACEPORT (TRACECLK) frequency		–	–	33[85]	MHz
	SWV bit rate		–	–	33[85]	Mbit

Notes
83. Based on device characterization (Not production tested).
84. f_SWDCK must also be no more than 1/3 CPU clock frequency.
85. TRACEPORT signal frequency and bit rate are limited by GPIO output frequency, see Table 11-10 on page 70.

11.9 Clocking

Specifications are valid for –40 °C ≤ T_A ≤ 85 °C and T_J ≤ 100 °C, except where noted. Specifications are valid for 1.71 V to 5.5 V, except where noted. Unless otherwise specified, all charts and graphs show typical values.

11.9.1 Internal Main Oscillator

Table 11-73. IMO DC Specifications[86]

Parameter	Description	Conditions	Min	Typ	Max	Units
Icc_imo	Supply current					
	62.6 MHz		–	–	600	µA
	48 MHz		–	–	500	µA
	24 MHz – USB mode	With oscillator locking to USB bus	–	–	500	µA
	24 MHz – non USB mode		–	–	300	µA
	12 MHz		–	–	200	µA
	6 MHz		–	–	180	µA
	3 MHz		–	–	150	µA

Figure 11-70. IMO Current vs. Frequency

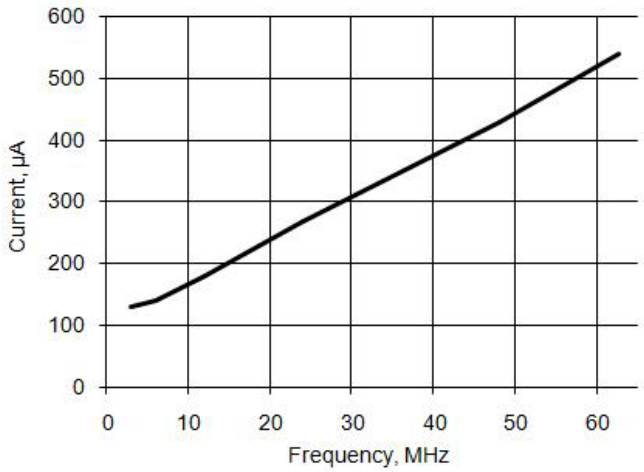

Note
86. Based on device characterization (Not production tested).

Table 11-74. IMO AC Specifications

Parameter	Description	Conditions	Min	Typ	Max	Units
F_{IMO}	IMO frequency stability (with factory trim)					
	62.6 MHz		–7	–	7	%
	48 MHz		–5	–	5	%
	24 MHz – Non USB mode		–4	–	4	%
	24 MHz – USB mode	With oscillator locking to USB bus	–0.25	–	0.25	%
	12 MHz		–3	–	3	%
	6 MHz		–2	–	2	%
	3 MHz		–1	–	1	%
Tstart_imo	Startup time[87]	From enable (during normal system operation)	–	–	13	µs
Jp–p	Jitter (peak to peak)[87]					
	F = 24 MHz		–	0.9	–	ns
	F = 3 MHz		–	1.6	–	ns
Jperiod	Jitter (long term)[87]					
	F = 24 MHz		–	0.9	–	ns
	F = 3 MHz		–	12	–	ns

Figure 11-71. IMO Frequency Variation vs. Temperature

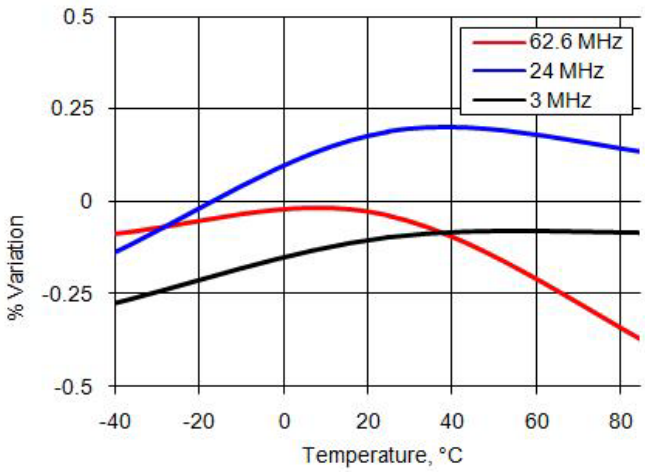

Figure 11-72. IMO Frequency Variation vs. V_{CC}

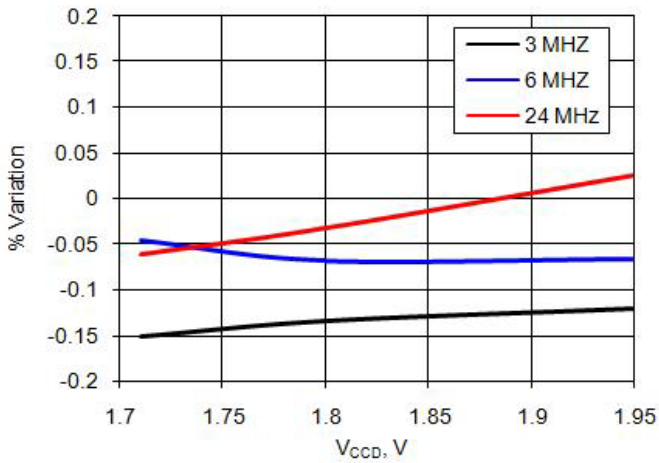

Note
87. Based on device characterization (Not production tested).

11.9.2 Internal Low-Speed Oscillator

Table 11-75. ILO DC Specifications

Parameter	Description	Conditions	Min	Typ	Max	Units
I_{CC}	Operating current[88]	F_{OUT} = 1 kHz	–	–	1.7	µA
		F_{OUT} = 33 kHz	–	–	2.6	µA
		F_{OUT} = 100 kHz	–	–	2.6	µA
	Leakage current[88]	Power down mode	–	–	15	nA

Table 11-76. ILO AC Specifications[89]

Parameter	Description	Conditions	Min	Typ	Max	Units
Tstart_ilo	Startup time, all frequencies	Turbo mode	–	–	2	ms
F_{ILO}	ILO frequencies					
	100 kHz		45	100	200	kHz
	1 kHz		0.5	1	2	kHz

Figure 11-73. ILO Frequency Variation vs. Temperature

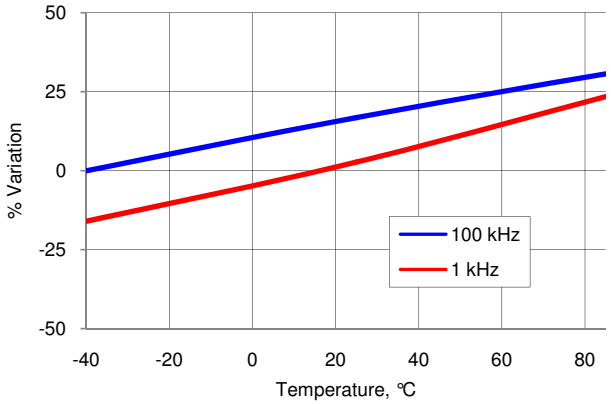

Figure 11-74. ILO Frequency Variation vs. V_{DD}

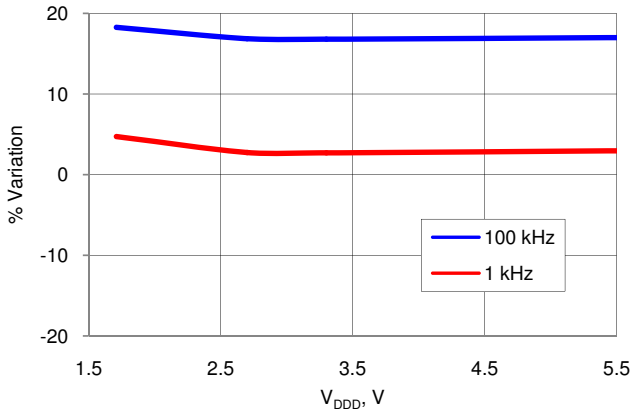

Notes
88. This value is calculated, not measured.
89. Based on device characterization (Not production tested).

11.9.3 MHz External Crystal Oscillator

For more information on crystal or ceramic resonator selection for the MHzECO, refer to application note AN54439: PSoC 3 and PSoC 5 External Oscillators.

Table 11-77. MHzECO AC Specifications

Parameter	Description	Conditions	Min	Typ	Max	Units
F	Crystal frequency range		4	–	25	MHz

11.9.4 kHz External Crystal Oscillator

Table 11-78. kHzECO DC Specifications[90]

Parameter	Description	Conditions	Min	Typ	Max	Units
I_{CC}	Operating current	Low power mode; CL = 6 pF	–	0.25	1.0	µA
DL	Drive level		–	–	1	µW

Table 11-79. kHzECO AC Specifications[90]

Parameter	Description	Conditions	Min	Typ	Max	Units
F	Frequency		–	32.768	–	kHz
T_{ON}	Startup time	High power mode	–	1	–	s

11.9.5 External Clock Reference

Table 11-80. External Clock Reference AC Specifications[90]

Parameter	Description	Conditions	Min	Typ	Max	Units
	External frequency range		0	–	33	MHz
	Input duty cycle range	Measured at $V_{DDIO}/2$	30	50	70	%
	Input edge rate	V_{IL} to V_{IH}	0.5	–	–	V/ns

11.9.6 Phase–Locked Loop

Table 11-81. PLL DC Specifications

Parameter	Description	Conditions	Min	Typ	Max	Units
I_{DD}	PLL operating current	In = 3 MHz, Out = 67 MHz	–	400	–	µA
		In = 3 MHz, Out = 24 MHz	–	200	–	µA

Table 11-82. PLL AC Specifications

Parameter	Description	Conditions	Min	Typ	Max	Units
Fpllin	PLL input frequency[91]		1	–	48	MHz
	PLL intermediate frequency[92]	Output of prescaler	1	–	3	MHz
Fpllout	PLL output frequency[91]		24	–	67	MHz
	Lock time at startup		–	–	250	µs
Jperiod–rms	Jitter (rms)[90]		–	–	250	ps

Notes
90. Based on device characterization (Not production tested).
91. This specification is guaranteed by testing the PLL across the specified range using the IMO as the source for the PLL.
92. PLL input divider, Q, must be set so that the input frequency is divided down to the intermediate frequency range. Value for Q ranges from 1 to 16.

12. Ordering Information

In addition to the features listed in Table 12-1, every CY8C56LP device includes: up to 256K flash, 64K SRAM, 2K EEPROM, a precision on–chip voltage reference, precision oscillators, flash, ECC, DMA, a fixed function I^2C, JTAG/SWD programming and debug, external memory interface, boost, and more. In addition to these features, the flexible UDBs and analog subsection support a wide range of peripherals. To assist you in selecting the ideal part, PSoC Creator makes a part recommendation after you choose the components required by your application. All CY8C56LP derivatives incorporate device and flash security in user-selectable security levels; see the TRM for details.

Table 12-1. CY8C56LP Family with ARM Cortex-M3 CPU

Part Number	MCU Core				Analog								Digital				I/O[95]				Package	JTAG ID[96]
	CPU Speed (MHz)	Flash (KB)	SRAM (KB)	EEPROM (KB)	LCD Segment Drive	ADCs	DAC	Comparators	SC/CT Analog Blocks[93]	Opamps	DFB	CapSense	UDBs[94]	16-bit Timer/PWM	FS USB	CAN 2.0b	Total I/O	GPIO	SIO	USBIO		
CY8C5668AXI-LP010	67	256	64	2	✔	2x12-bit SAR	4	4	4	4	✔	✔	24	4	✔	–	72	62	8	2	100-TQFP	0x2E10A069
CY8C5668AXI-LP013	67	256	64	2	✔	2x12-bit SAR	4	4	4	4	✔	✔	24	4	✔	✔	72	62	8	2	100-TQFP	0x2E10D069
CY8C5668LTI-LP014	67	256	64	2	✔	2x12-bit SAR	4	4	4	4	✔	✔	24	4	✔	–	48	38	8	2	68-QFN	0x2E10E069
CY8C5667AXI-LP006	67	128	32	2	✔	2x12-bit SAR	4	4	4	4	✔	✔	24	4	✔	–	72	62	8	2	100-TQFP	0x2E106069
CY8C5667LTI-LP008	67	128	32	2	✔	2x12-bit SAR	4	4	4	4	✔	✔	24	4	✔	–	48	38	8	2	68-QFN	0x2E108069
CY8C5667LTI-LP009	67	128	32	2	✔	2x12-bit SAR	4	4	4	4	✔	✔	24	4	✔	✔	48	38	8	2	68-QFN	0x2E109069
CY8C5666AXI-LP001	67	64	16	2	✔	12-bit Del-Sig, 1x12-bit SAR	4	4	4	4	✔	✔	20	4	–	–	70	62	8	0	100-TQFP	0x2E101069
CY8C5666AXI-LP004	67	64	16	2	✔	12-bit Del-Sig, 1x12-bit SAR	4	4	4	4	✔	✔	20	4	✔	–	72	62	8	2	100-TQFP	0x2E104069
CY8C5666LTI-LP005	67	64	16	2	✔	12-bit Del-Sig, 1x12-bit SAR	4	4	4	4	✔	✔	20	4	✔	–	48	38	8	2	68-QFN	0x2E105069
CY8C5667AXI-LP040	67	128	32	2	✔	12-bit Del-Sig, 1x12-bit SAR	4	4	4	4	✔	✔	24	4	✔	–	72	62	8	2	100-TQFP	0x2E128069
CY8C5668AXI-LP034	67	256	64	2	✔	12-bit Del-Sig, 1x12-bit SAR	4	4	4	4	✔	✔	24	4	✔	–	72	62	8	2	100-TQFP	0x2E122069
CY8C5667LTI-LP041	67	128	32	2	✔	12-bit Del-Sig, 1x12-bit SAR	4	4	4	4	✔	✔	24	4	✔	–	48	38	8	2	68-QFN	0x2E129069

Notes

93. Analog blocks support a wide variety of functionality including TIA, PGA, and mixers. See Example Peripherals on page 35 for more information on how analog blocks can be used.
94. UDBs support a wide variety of functionality including SPI, LIN, UART, timer, counter, PWM, PRS, and others. Individual functions may use a fraction of a UDB or multiple UDBs. Multiple functions can share a single UDB. See Example Peripherals on page 35 for more information on how UDBs can be used.
95. The I/O Count includes all types of digital I/O: GPIO, SIO, and the two USB I/O. See I/O System and Routing on page 28 for details on the functionality of each of these types of I/O.
96. The JTAG ID has three major fields. The most significant nibble (left digit) is the version, followed by a 2 byte part number and a 3 nibble manufacturer ID.

12.1 Part Numbering Conventions

PSoC 5LP devices follow the part numbering convention described here. All fields are single character alphanumeric (0, 1, 2, …, 9, A, B, …, Z) unless stated otherwise.

CY8Cabcdefg-LPxxx

- a: Architecture
  - 3: PSoC 3
  - 5: PSoC 5
- b: Family group within architecture
  - 2: CY8C52LP family
  - 4: CY8C54LP family
  - 6: CY8C56LP family
  - 8: CY8C58LP family
- c: Speed grade
  - 6: 67 MHz
- d: Flash capacity
  - 5: 32 KB
  - 6: 64 KB
  - 7: 128 KB
  - 8: 256 KB
- ef: Package code
  - Two character alphanumeric
  - AX: TQFP
  - LT: QFN
  - PV: SSOP
- g: Temperature range
  - C: commercial
  - I: industrial
  - A: automotive
- xxx: Peripheral set
  - Three character numeric
  - No meaning is associated with these three characters

Examples

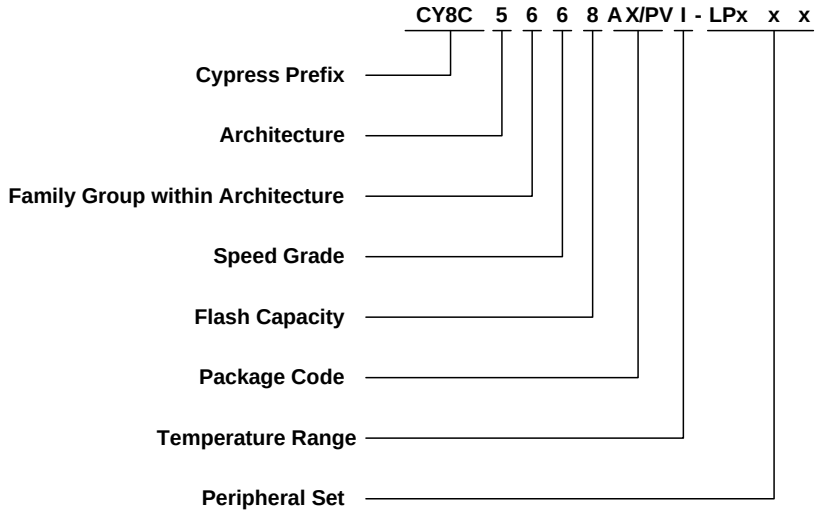

All devices in the PSoC 5LP CY8C56LP family comply to RoHS-6 specifications, demonstrating the commitment by Cypress to lead-free products. Lead (Pb) is an alloying element in solders that has resulted in environmental concerns due to potential toxicity. Cypress uses nickel-palladium-gold (NiPdAu) technology for the majority of leadframe-based packages.

A high level review of the Cypress Pb-free position is available on our website. Specific package information is also available. Package Material Declaration Datasheets (PMDDs) identify all substances contained within Cypress packages. PMDDs also confirm the absence of many banned substances. The information in the PMDDs will help Cypress customers plan for recycling or other “end of life” requirements.

13. Packaging

Table 13-1. Package Characteristics

Parameter	Description	Conditions	Min	Typ	Max	Units
T_A	Operating ambient temperature		–40	25	85	°C
T_J	Operating junction temperature		–40	–	100	°C
T_{JA}	Package θ_{JA} (68-pin QFN)		–	15	–	°C/Watt
T_{JA}	Package θ_{JA} (100-pin TQFP)		–	34	–	°C/Watt
T_{JC}	Package θ_{JC} (68-pin QFN)		–	13	–	°C/Watt
T_{JC}	Package θ_{JC} (100-pin TQFP)		–	10	–	°C/Watt

Table 13-2. Solder Reflow Peak Temperature

Package	Maximum Peak Temperature	Maximum Time at Peak Temperature
68-pin QFN	260 °C	30 seconds
100-pin TQFP	260 °C	30 seconds

Table 13-3. Package Moisture Sensitivity Level (MSL), IPC/JEDEC J-STD-2

Package	MSL
68-pin QFN	MSL 3
100-pin TQFP	MSL 3

Figure 13-1. 68-pin QFN 8 × 8 with 0.4 mm Pitch Package Outline (Sawn Version)

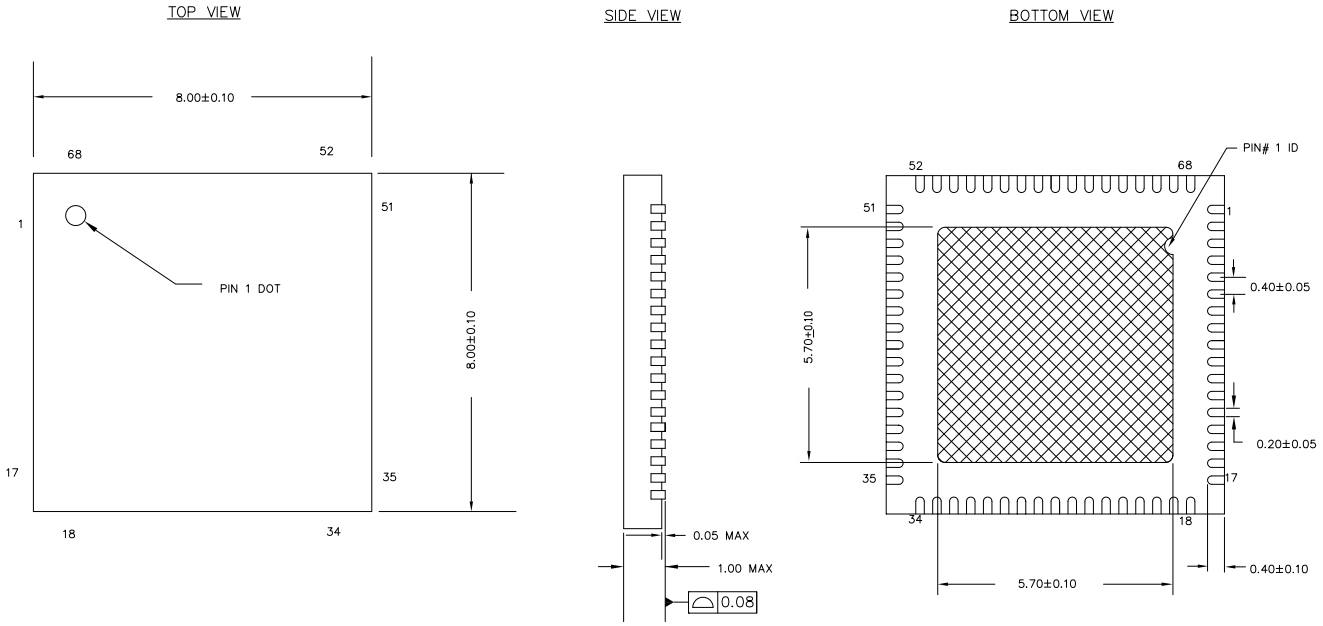

NOTES:

1. HATCH AREA IS SOLDERABLE EXPOSED METAL.
2. REFERENCE JEDEC#: MO–220
3. PACKAGE WEIGHT: 17 ± 2mg
4. ALL DIMENSIONS ARE IN MILLIMETERS

001-09618 *E

Figure 13-2. 100-pin TQFP (14 × 14 × 1.4 mm) Package Outline

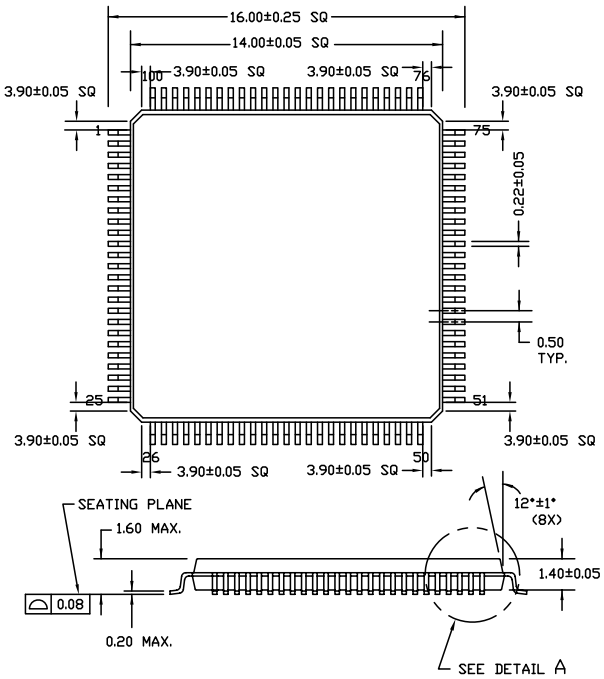

NOTE:

1. JEDEC STD REF MS-026
2. BODY LENGTH DIMENSION DOES NOT INCLUDE MOLD PROTRUSION/END FLASH MOLD PROTRUSION/END FLASH SHALL NOT EXCEED 0.0098 in (0.25 mm) PER SIDE BODY LENGTH DIMENSIONS ARE MAX PLASTIC BODY SIZE INCLUDING MOLD MISMATCH
3. DIMENSIONS IN MILLIMETERS

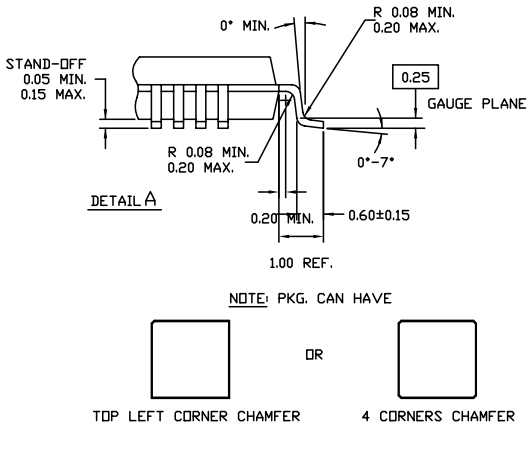

51-85048 *G

14. Acronyms

Table 14-1. Acronyms Used in this Document

Acronym	Description
abus	analog local bus
ADC	analog-to-digital converter
AG	analog global
AHB	AMBA (advanced microcontroller bus architecture) high-performance bus, an ARM data transfer bus
ALU	arithmetic logic unit
AMUXBUS	analog multiplexer bus
API	application programming interface
APSR	application program status register
ARM®	advanced RISC machine, a CPU architecture
ATM	automatic thump mode
BW	bandwidth
CAN	Controller Area Network, a communications protocol
CMRR	common-mode rejection ratio
CPU	central processing unit
CRC	cyclic redundancy check, an error-checking protocol
DAC	digital-to-analog converter, see also IDAC, VDAC
DFB	digital filter block
DIO	digital input/output, GPIO with only digital capabilities, no analog. See GPIO.
DMA	direct memory access, see also TD
DNL	differential nonlinearity, see also INL
DNU	do not use
DR	port write data registers
DSI	digital system interconnect
DWT	data watchpoint and trace
ECC	error correcting code
ECO	external crystal oscillator
EEPROM	electrically erasable programmable read-only memory
EMI	electromagnetic interference
EMIF	external memory interface
EOC	end of conversion
EOF	end of frame
EPSR	execution program status register
ESD	electrostatic discharge
ETM	embedded trace macrocell

Table 14-1. Acronyms Used in this Document (continued)

Acronym	Description
FIR	finite impulse response, see also IIR
FPB	flash patch and breakpoint
FS	full-speed
GPIO	general-purpose input/output, applies to a PSoC pin
HVI	high-voltage interrupt, see also LVI, LVD
IC	integrated circuit
IDAC	current DAC, see also DAC, VDAC
IDE	integrated development environment
I^2C, or IIC	Inter-Integrated Circuit, a communications protocol
IIR	infinite impulse response, see also FIR
ILO	internal low-speed oscillator, see also IMO
IMO	internal main oscillator, see also ILO
INL	integral nonlinearity, see also DNL
I/O	input/output, see also GPIO, DIO, SIO, USBIO
IPOR	initial power-on reset
IPSR	interrupt program status register
IRQ	interrupt request
ITM	instrumentation trace macrocell
LCD	liquid crystal display
LIN	Local Interconnect Network, a communications protocol.
LR	link register
LUT	lookup table
LVD	low-voltage detect, see also LVI
LVI	low-voltage interrupt, see also HVI
LVTTL	low-voltage transistor-transistor logic
MAC	multiply-accumulate
MCU	microcontroller unit
MISO	master-in slave-out
NC	no connect
NMI	nonmaskable interrupt
NRZ	non-return-to-zero
NVIC	nested vectored interrupt controller
NVL	nonvolatile latch, see also WOL
opamp	operational amplifier
PAL	programmable array logic, see also PLD
PC	program counter
PCB	printed circuit board
PGA	programmable gain amplifier

Table 14-1. Acronyms Used in this Document (continued)

Acronym	Description
PHUB	peripheral hub
PHY	physical layer
PICU	port interrupt control unit
PLA	programmable logic array
PLD	programmable logic device, see also PAL
PLL	phase-locked loop
PMDD	package material declaration datasheet
POR	power-on reset
PRES	precise low-voltage reset
PRS	pseudo random sequence
PS	port read data register
PSoC®	Programmable System-on-Chip™
PSRR	power supply rejection ratio
PWM	pulse-width modulator
RAM	random-access memory
RISC	reduced-instruction-set computing
RMS	root-mean-square
RTC	real-time clock
RTL	register transfer language
RTR	remote transmission request
RX	receive
SAR	successive approximation register
SC/CT	switched capacitor/continuous time
SCL	I^2C serial clock
SDA	I^2C serial data
S/H	sample and hold
SIO	special input/output, GPIO with advanced features. See GPIO.
SNR	signal-to-noise ratio
SOC	start of conversion

Table 14-1. Acronyms Used in this Document (continued)

Acronym	Description
SOF	start of frame
SPI	Serial Peripheral Interface, a communications protocol
SR	slew rate
SRAM	static random access memory
SRES	software reset
SWD	serial wire debug, a test protocol
SWV	single-wire viewer
TD	transaction descriptor, see also DMA
THD	total harmonic distortion
TIA	transimpedance amplifier
TRM	technical reference manual
TTL	transistor-transistor logic
TX	transmit
UART	Universal Asynchronous Transmitter Receiver, a communications protocol
UDB	universal digital block
USB	Universal Serial Bus
USBIO	USB input/output, PSoC pins used to connect to a USB port
VDAC	voltage DAC, see also DAC, IDAC
WDT	watchdog timer
WOL	write once latch, see also NVL
WRES	watchdog timer reset
XRES	external reset I/O pin
XTAL	crystal

15. Reference Documents

PSoC® 3, PSoC® 5 Architecture TRM

PSoC® 5 Registers TRM

16. Document Conventions

16.1 Units of Measure

Table 16-1. Units of Measure

Symbol	Unit of Measure
°C	degrees Celsius
dB	decibels
fF	femtofarads
Hz	hertz
KB	1024 bytes
kbps	kilobits per second
Khr	kilohours
kHz	kilohertz
kΩ	kilohms
ksps	kilosamples per second
LSB	least significant bit
Mbps	megabits per second
MHz	megahertz
MΩ	megaohms
Msps	megasamples per second
µA	microamperes
µF	microfarads
µH	microhenrys
µs	microseconds
µV	microvolts
µW	microwatts
mA	milliamperes
ms	milliseconds
mV	millivolts
nA	nanoamperes
ns	nanoseconds
nV	nanovolts
Ω	ohms
pF	picofarads
ppm	parts per million
ps	picoseconds
s	seconds
sps	samples per second
sqrtHz	square root of hertz
V	volts

17. Revision History

Description Title: PSoC® 5LP: CY8C56LP Family Datasheet Programmable System-on-Chip (PSoC®) Document Number: 001-84935				
Revision	**ECN**	**Submission Date**	**Orig. of Change**	**Description of Change**
**	3825653	12/07/2012	MKEA	Datasheet for new CY8C56LP family.
*A	3897878	02/07/2013	MKEA	Removed Preliminary status. Updated characterization footnotes in Electrical Specifications. Changed number of opamps in Ordering Information Updated conditions for SAR ADC INL and DNL specifications in Table 11-24 Updated Table 11-76 (ILO AC Specifications). Changed “UDB Configuration" to "UDB Working Registers” in Table 5-5. Removed references to CAN. Updated VIDAC INL spec.
*B	3902085	02/12/2013	MKEA	Changed Hibernate wakeup time from 125 µs to 200 µs in Table 6-3 and Table 11-3.
*C	3917994	01/08/2013	MKEA	Added Controller Area Network (CAN) content. Added CY8C5667AXI-LP040, CY8C5668AXI-LP034, and CY8C5667LTI-LP041 parts in Ordering Information.

18. Sales, Solutions, and Legal Information

Worldwide Sales and Design Support

Cypress maintains a worldwide network of offices, solution centers, manufacturers’ representatives, and distributors. To find the office closest to you, visit us at Cypress Locations.

Products

Automotive	cypress.com/go/automotive
Clocks & Buffers	cypress.com/go/clocks
Interface	cypress.com/go/interface
Lighting & Power Control	cypress.com/go/powerpsoc cypress.com/go/plc
Memory	cypress.com/go/memory
PSoC	cypress.com/go/psoc
Touch Sensing	cypress.com/go/touch
USB Controllers	cypress.com/go/USB
Wireless/RF	cypress.com/go/wireless

PSoC Solutions

psoc.cypress.com/solutions

PSoC 1 | PSoC 3 | PSoC 5LP

© Cypress Semiconductor Corporation, 2012-2013. The information contained herein is subject to change without notice. Cypress Semiconductor Corporation assumes no responsibility for the use of any circuitry other than circuitry embodied in a Cypress product. Nor does it convey or imply any license under patent or other rights. Cypress products are not warranted nor intended to be used for medical, life support, life saving, critical control or safety applications, unless pursuant to an express written agreement with Cypress. Furthermore, Cypress does not authorize its products for use as critical components in life-support systems where a malfunction or failure may reasonably be expected to result in significant injury to the user. The inclusion of Cypress products in life-support systems application implies that the manufacturer assumes all risk of such use and in doing so indemnifies Cypress against all charges.

Any Source Code (software and/or firmware) is owned by Cypress Semiconductor Corporation (Cypress) and is protected by and subject to worldwide patent protection (United States and foreign), United States copyright laws and international treaty provisions. Cypress hereby grants to licensee a personal, non-exclusive, non-transferable license to copy, use, modify, create derivative works of, and compile the Cypress Source Code and derivative works for the sole purpose of creating custom software and or firmware in support of licensee product to be used only in conjunction with a Cypress integrated circuit as specified in the applicable agreement. Any reproduction, modification, translation, compilation, or representation of this Source Code except as specified above is prohibited without the express written permission of Cypress.

Disclaimer: CYPRESS MAKES NO WARRANTY OF ANY KIND, EXPRESS OR IMPLIED, WITH REGARD TO THIS MATERIAL, INCLUDING, BUT NOT LIMITED TO, THE IMPLIED WARRANTIES OF MERCHANTABILITY AND FITNESS FOR A PARTICULAR PURPOSE. Cypress reserves the right to make changes without further notice to the materials described herein. Cypress does not assume any liability arising out of the application or use of any product or circuit described herein. Cypress does not authorize its products for use as critical components in life-support systems where a malfunction or failure may reasonably be expected to result in significant injury to the user. The inclusion of Cypress’ product in a life-support systems application implies that the manufacturer assumes all risk of such use and in doing so indemnifies Cypress against all charges.

Use may be limited by and subject to the applicable Cypress software license agreement.

CapSense®, PSoC®3, PSoC®5, and PSoC® Creator™ are trademarks and PSoC® is a registered trademark of Cypress Semiconductor Corp. All other trademarks or registered trademarks referenced herein are property of the respective corporations.

Purchase of I2C components from Cypress or one of its sublicensed Associated Companies conveys a license under the Philips I2C Patent Rights to use these components in an I2C system, provided that the system conforms to the I2C Standard Specification as defined by Philips.

ARM is a registered trademark, and Keil, and RealView are trademarks, of ARM Limited. All products and company names mentioned in this document may be the trademarks of their respective holders.

Компания «ЭлектроПласт» предлагает заключение долгосрочных отношений при поставках импортных электронных компонентов на взаимовыгодных условиях!

Наши преимущества:

- Оперативные поставки широкого спектра электронных компонентов отечественного и импортного производства напрямую от производителей и с крупнейших мировых складов;
- Поставка более 17-ти миллионов наименований электронных компонентов;
- Поставка сложных, дефицитных, либо снятых с производства позиций;
- Оперативные сроки поставки под заказ (от 5 рабочих дней);
- Экспресс доставка в любую точку России;
- Техническая поддержка проекта, помощь в подборе аналогов, поставка прототипов;
- Система менеджмента качества сертифицирована по Международному стандарту ISO 9001;
- Лицензия ФСБ на осуществление работ с использованием сведений, составляющих государственную тайну;
- Поставка специализированных компонентов (Xilinx, Altera, Analog Devices, Intersil, Interpoint, Microsemi, Aeroflex, Peregrine, Syfer, Eurofarad, Texas Instrument, Miteq, Cobham, E2V, MA-COM, Hittite, Mini-Circuits,General Dynamics и др.);

Помимо этого, одним из направлений компании «ЭлектроПласт» является направление «Источники питания». Мы предлагаем Вам помощь Конструкторского отдела:

- Подбор оптимального решения, техническое обоснование при выборе компонента;
- Подбор аналогов;
- Консультации по применению компонента;
- Поставка образцов и прототипов;
- Техническая поддержка проекта;
- Защита от снятия компонента с производства.

Как с нами связаться

Телефон: 8 (812) 309 58 32 (многоканальный)
Факс: 8 (812) 320-02-42
Электронная почта: org@eplast1.ru
Адрес: 198099, г. Санкт-Петербург, ул. Калинина, дом 2, корпус 4, литера А.