FAIRCHILD SEMICONDUCTOR®

February 2008

74LCX04
Low Voltage Hex Inverter with 5V Tolerant Inputs

Features

- 5V tolerant inputs
- 2.3V–3.6V V_{CC} specifications provided
- 5.2ns t_{PD} max. (V_{CC} = 3.3V), 10µA I_{CC} max.
- Power down high impedance inputs and outputs
- ±24mA output drive (V_{CC} = 3.0V)
- Implements proprietary noise/EMI reduction circuitry
- Latch-up performance exceeds JEDEC 78 conditions
- ESD performance:
  - Human body model > 2000V
  - Machine model > 200V
- Leadless DQFN package

General Description

The LCX04 contains six inverters. The inputs tolerate voltages up to 7V allowing the interface of 5V systems to 3V systems.

The 74LCX04 is fabricated with advanced CMOS technology to achieve high speed operation while maintaining CMOS low power dissipation.

Ordering Information

Order Number	Package Number	Package Description
74LCX04M	M14A	14-Lead Small Outline Integrated Circuit (SOIC), JEDEC MS-012, 0.150" Narrow
74LCX04SJ	M14D	14-Lead Small Outline Package (SOP), EIAJ TYPE II, 5.3mm Wide
74LCX04BQX(1)	MLP14A	14-Terminal Depopulated Quad Very-Thin Flat Pack No Leads (DQFN), JEDEC MO-241, 2.5 x 3.0mm
74LCX04MTC	MTC14	14-Lead Thin Shrink Small Outline Package (TSSOP), JEDEC MO-153, 4.4mm Wide

Note:

1. DQFN package available in Tape and Reel only.

Device also available in Tape and Reel. Specify by appending suffix letter “X” to the ordering number.

All packages are lead free per JEDEC: J-STD-020B standard.

©1995 Fairchild Semiconductor Corporation

Connection Diagrams

Pin Assignments for SOIC, SOP, and TSSOP

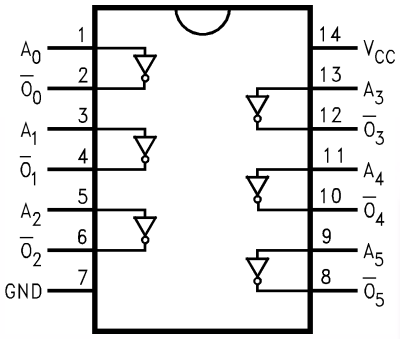

Pad Assignments for DQFN

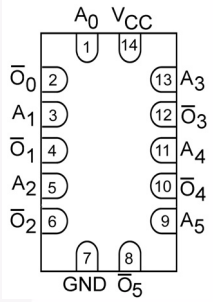

(Top View)

Logic Symbol

IEEE/IEC

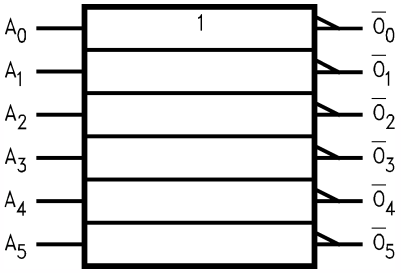

Pin Description

Pin Names	Description
A_n, B_n	Inputs
$\overline{O}_n$	Outputs

Absolute Maximum Ratings

Stresses exceeding the absolute maximum ratings may damage the device. The device may not function or be operable above the recommended operating conditions and stressing the parts to these levels is not recommended. In addition, extended exposure to stresses above the recommended operating conditions may affect device reliability. The absolute maximum ratings are stress ratings only.

Symbol	Parameter	Rating
V_{CC}	Supply Voltage	–0.5V to +7.0V
V_I	DC Input Voltage	–0.5V to +7.0V
V_O	DC Output Voltage, Output in HIGH or LOW State[2]	–0.5V to V_{CC} + 0.5V
I_{IK}	DC Input Diode Current, V_I < GND	–50mA
I_{OK}	DC Output Diode Current	
	V_O < GND	–50mA
	V_O > V_{CC}	+50mA
I_O	DC Output Source/Sink Current	±50mA
I_{CC}	DC Supply Current per Supply Pin	±100mA
I_{GND}	DC Ground Current per Ground Pin	±100mA
T_{STG}	Storage Temperature	–65°C to +150°C

Note:

2. I_O Absolute Maximum Rating must be observed.

Recommended Operating Conditions[3]

The Recommended Operating Conditions table defines the conditions for actual device operation. Recommended operating conditions are specified to ensure optimal performance to the datasheet specifications. Fairchild does not recommend exceeding them or designing to absolute maximum ratings.

Symbol	Parameter	Min.	Max.	Units
V_{CC}	Supply Voltage			
	Operating	2.0	3.6	V
	Data Retention	1.5	3.6	
V_I	Input Voltage	0	5.5	V
V_O	Output Voltage, HIGH or LOW State	0	V_{CC}	V
I_{OH} / I_{OL}	Output Current			
	V_{CC} = 3.0V–3.6V		±24	mA
	V_{CC} = 2.7V–3.0V		±12	
	V_{CC} = 2.3V–2.7V		±8	
T_A	Free-Air Operating Temperature	–40	85	°C
$\Delta t / \Delta V$	Input Edge Rate, V_{IN} = 0.8V–2.0V, V_{CC} = 3.0V	0	10	ns/V

Note:

3. Unused inputs must be held HIGH or LOW. They may not float.

DC Electrical Characteristics

Symbol	Parameter	V_{CC} (V)	Conditions	T_A = –40°C to +85°C Min.	Max.	Units
V_{IH}	HIGH Level Input Voltage	2.3–2.7		1.7		V
		2.7–3.6		2.0		
V_{IL}	LOW Level Input Voltage	2.3–2.7			0.7	V
		2.7–3.6			0.8	
V_{OH}	HIGH Level Output Voltage	2.3–3.6	I_{OH} = –100μA	V_{CC} – 0.2		V
		2.3	I_{OH} = –8mA	1.8		
		2.7	I_{OH} = –12mA	2.2		
		3.0	I_{OH} = –18mA	2.4		
			I_{OH} = –24mA	2.2		
V_{OL}	LOW Level Output Voltage	2.3–3.6	I_{OL} = 100μA		0.2	V
		2.3	I_{OL} = 8mA		0.6	
		2.7	I_{OL} = 12mA		0.4	
		3.0	I_{OL} = 16mA		0.4	
			I_{OL} = 24mA		0.55	
I_I	Input Leakage Current	2.3–3.6	$0 \le V_I \le 5.5V$		±5.0	μA
I_{OFF}	Power-Off Leakage Current	0	V_I or V_O = 5.5V		10	μA
I_{CC}	Quiescent Supply Current	2.3–3.6	$V_I = V_{CC}$ or GND		10	μA
			$3.6V \le V_I \le 5.5V$		±10	
ΔI_{CC}	Increase in I_{CC} per Input	2.3–3.6	$V_{IH} = V_{CC}$ – 0.6V		500	μA

AC Electrical Characteristics

Symbol	Parameter	T_A = –40°C to +85°C, R_L = 500Ω						Units
		V_{CC} = 3.3V ± 0.3V, C_L = 50pF		V_{CC} = 2.7V, C_L = 50pF		V_{CC} = 2.5V ± 0.2V, C_L = 30pF		
		Min.	Max.	Min.	Max.	Min.	Max.	
t_{PHL}, t_{PLH}	Propagation Delay	1.5	5.2	1.5	6.0	1.5	6.2	ns
t_{OSHL}, t_{OSLH}	Output to Output Skew[4]		1.0					ns

Note:

4. Skew is defined as the absolute value of the difference between the actual propagation delay for any two separate outputs of the same device. The specification applies to any outputs switching in the same direction, either HIGH-to-LOW (t_{OSHL}) or LOW-to-HIGH (t_{OSLH}).

Dynamic Switching Characteristics

Symbol	Parameter	V_{CC} (V)	Conditions	T_A = 25°C Typical	Unit
V_{OLP}	Quiet Output Dynamic Peak V_{OL}	3.3	C_L = 50pF, V_{IH} = 3.3V, V_{IL} = 0V	0.8	V
		2.5	C_L = 30pF, V_{IH} = 2.5V, V_{IL} = 0V	0.6	
V_{OLV}	Quiet Output Dynamic Valley V_{OL}	3.3	C_L = 50 pF, V_{IH} = 3.3V, V_{IL} = 0V	–0.8	V
		2.5	C_L = 30 pF, V_{IH} = 2.5V, V_{IL} = 0V	–0.6	

Capacitance

Symbol	Parameter	Conditions	Typical	Units
C_{IN}	Input Capacitance	V_{CC} = Open, V_I = 0V or V_{CC}	7	pF
C_{OUT}	Output Capacitance	V_{CC} = 3.3V, V_I = 0V or V_{CC}	8	pF
C_{PD}	Power Dissipation Capacitance	V_{CC} = 3.3V, V_I = 0V or V_{CC}, f = 10MHz	25	pF

©1995 Fairchild Semiconductor Corporation

AC Loading and Waveforms (Generic for LCX Family)

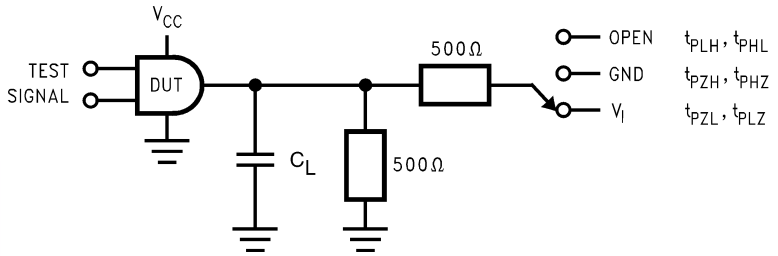

Test	Switch
t_{PLH}, t_{PHL}	Open
t_{PZL}, t_{PLZ}	6V at V_{CC} = 3.3 ± 0.3V V_{CC} x 2 at V_{CC} = 2.5 ± 0.2V
t_{PZH}, t_{PHZ}	GND

Figure 1. AC Test Circuit (C_L includes probe and jig capacitance)

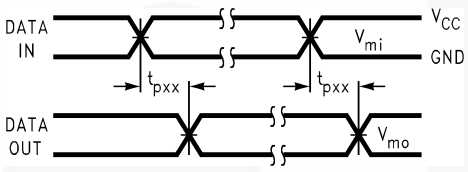

Waveform for Inverting and Non-Inverting Functions

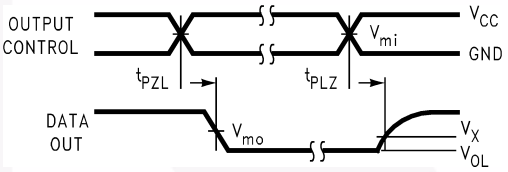

3-STATE Output High Enable and Disable Times for Logic

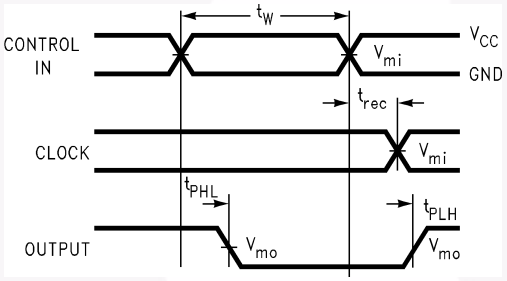

Propagation Delay. Pulse Width and t_{rec} Waveforms

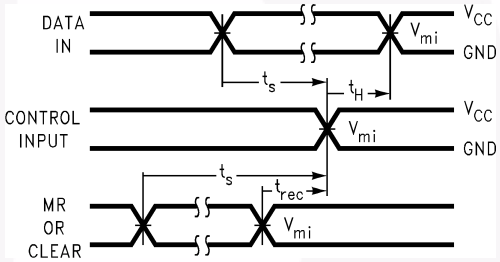

Setup Time, Hold Time and Recovery Time for Logic

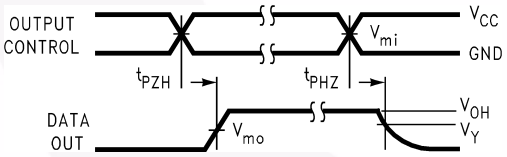

3-STATE Output Low Enable and Disable Times for Logic

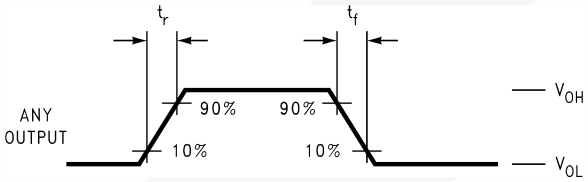

t_{rise} and t_{fall}

Symbol	V_{CC}		
	3.3V ± 0.3V	2.7V	2.5V ± 0.2V
V_{mi}	1.5V	1.5V	V_{CC} / 2
V_{mo}	1.5V	1.5V	V_{CC} / 2
V_x	V_{OL} + 0.3V	V_{OL} + 0.3V	V_{OL} + 0.15V
V_y	V_{OH} – 0.3V	V_{OH} – 0.3V	V_{OH} – 0.15V

Figure 2. Waveforms (Input Characteristics; f = 1MHz, t_r = t_f = 3ns)

Schematic Diagram (Generic for LCX Family)

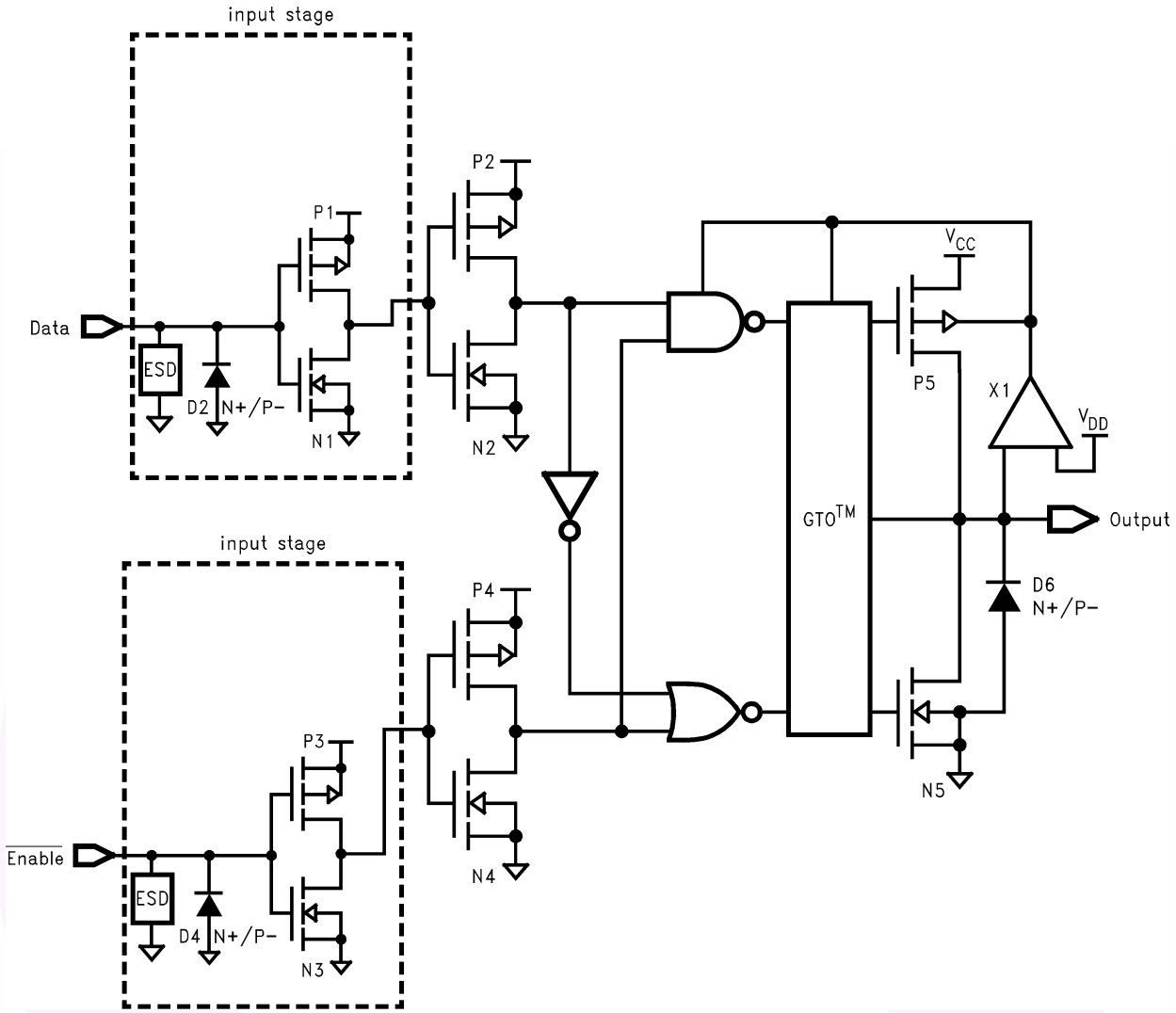

Tape and Reel Specification

Tape Format for DQFN

Package Designator	Tape Section	Number of Cavities	Cavity Status	Cover Tape Status
BQX	Leader (Start End)	125 (Typ.)	Empty	Sealed
	Carrier	3000	Filled	Sealed
	Trailer (Hub End)	75 (Typ.)	Empty	Sealed

Tape Dimensions inches (millimeters)

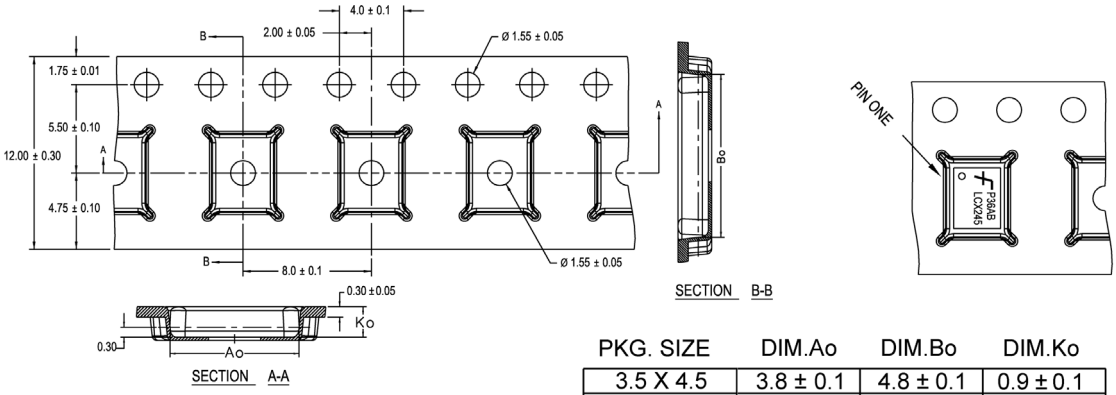

PKG. SIZE	DIM.Ao	DIM.Bo	DIM.Ko
3.5 X 4.5	3.8 ± 0.1	4.8 ± 0.1	0.9 ± 0.1
3.0 X 3.0	3.3 ± 0.1	3.3 ± 0.1	0.9 ± 0.1
2.5 X 4.5	2.8 ± 0.1	4.8 ± 0.1	0.9 ± 0.1
2.5 X 3.5	2.8 ± 0.1	3.8 ± 0.1	0.9 ± 0.1
2.5 X 3.0	2.8 ± 0.1	3.3 ± 0.1	0.9 ± 0.1
2.5 X 2.5	2.8 ± 0.1	2.8 ± 0.1	0.9 ± 0.1

DIMENSIONS ARE IN MILLIMETERS

NOTES: unless otherwise specified

1. Cummulative pitch for feeding holes and cavities (chip pockets) not to exceed 0.008[0.20] over 10 pitch span.
2. Smallest allowable bending radius.
3. Thru hole inside cavity is centered within cavity.
4. Tolerance is ±0.002[0.05] for these dimensions on all 12mm tapes.
5. Ao and Bo measured on a plane 0.120[0.30] above the bottom of the pocket.
6. Ko measured from a plane on the inside bottom of the pocket to the top surface of the carrier.
7. Pocket position relative to sprocket hole measured as true position of pocket. Not pocket hole.
8. Controlling dimension is millimeter. Diemension in inches rounded.

Reel Dimensions inches (millimeters)

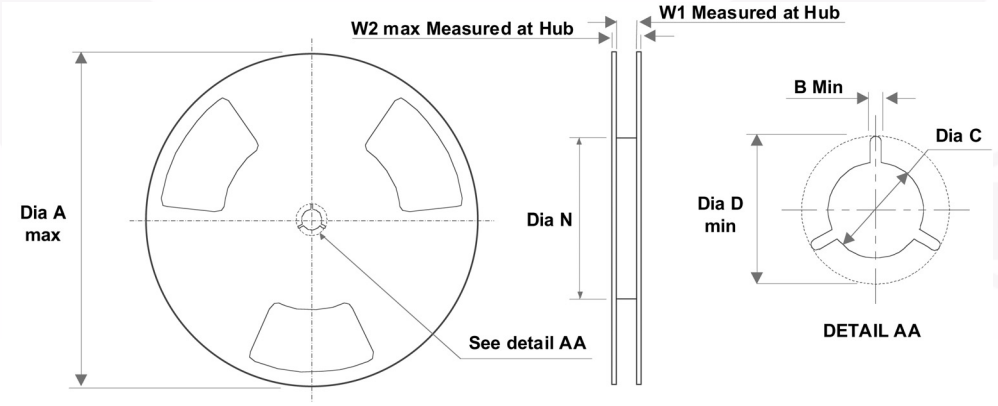

Tape Size	A	B	C	D	N	W1	W2
12mm	13.0 (330.0)	0.059 (1.50)	0.512 (13.00)	0.795 (20.20)	2.165 (55.00)	0.488 (12.4)	0.724 (18.4)

Physical Dimensions

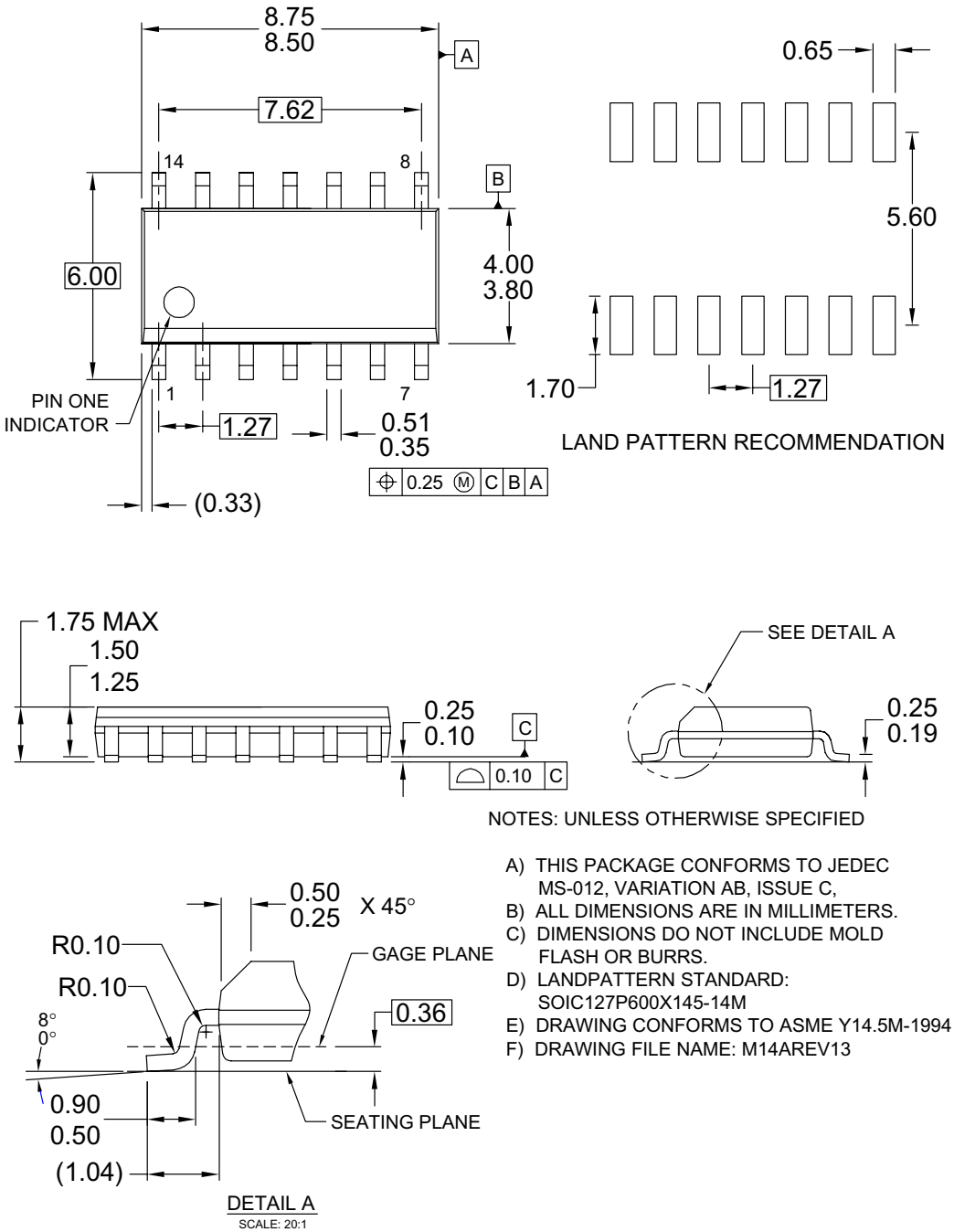

NOTES: UNLESS OTHERWISE SPECIFIED

A) THIS PACKAGE CONFORMS TO JEDEC MS-012, VARIATION AB, ISSUE C,
B) ALL DIMENSIONS ARE IN MILLIMETERS.
C) DIMENSIONS DO NOT INCLUDE MOLD FLASH OR BURRS.
D) LANDPATTERN STANDARD: SOIC127P600X145-14M
E) DRAWING CONFORMS TO ASME Y14.5M-1994
F) DRAWING FILE NAME: M14AREV13

Figure 3. 14-Lead Small Outline Integrated Circuit (SOIC), JEDEC MS-012, 0.150" Narrow

Package drawings are provided as a service to customers considering Fairchild components. Drawings may change in any manner without notice. Please note the revision and/or date on the drawing and contact a Fairchild Semiconductor representative to verify or obtain the most recent revision. Package specifications do not expand the terms of Fairchild's worldwide terms and conditions, specifically the warranty therein, which covers Fairchild products.

Always visit Fairchild Semiconductor's online packaging area for the most recent package drawings:

http://www.fairchildsemi.com/packaging/

Physical Dimensions (Continued)

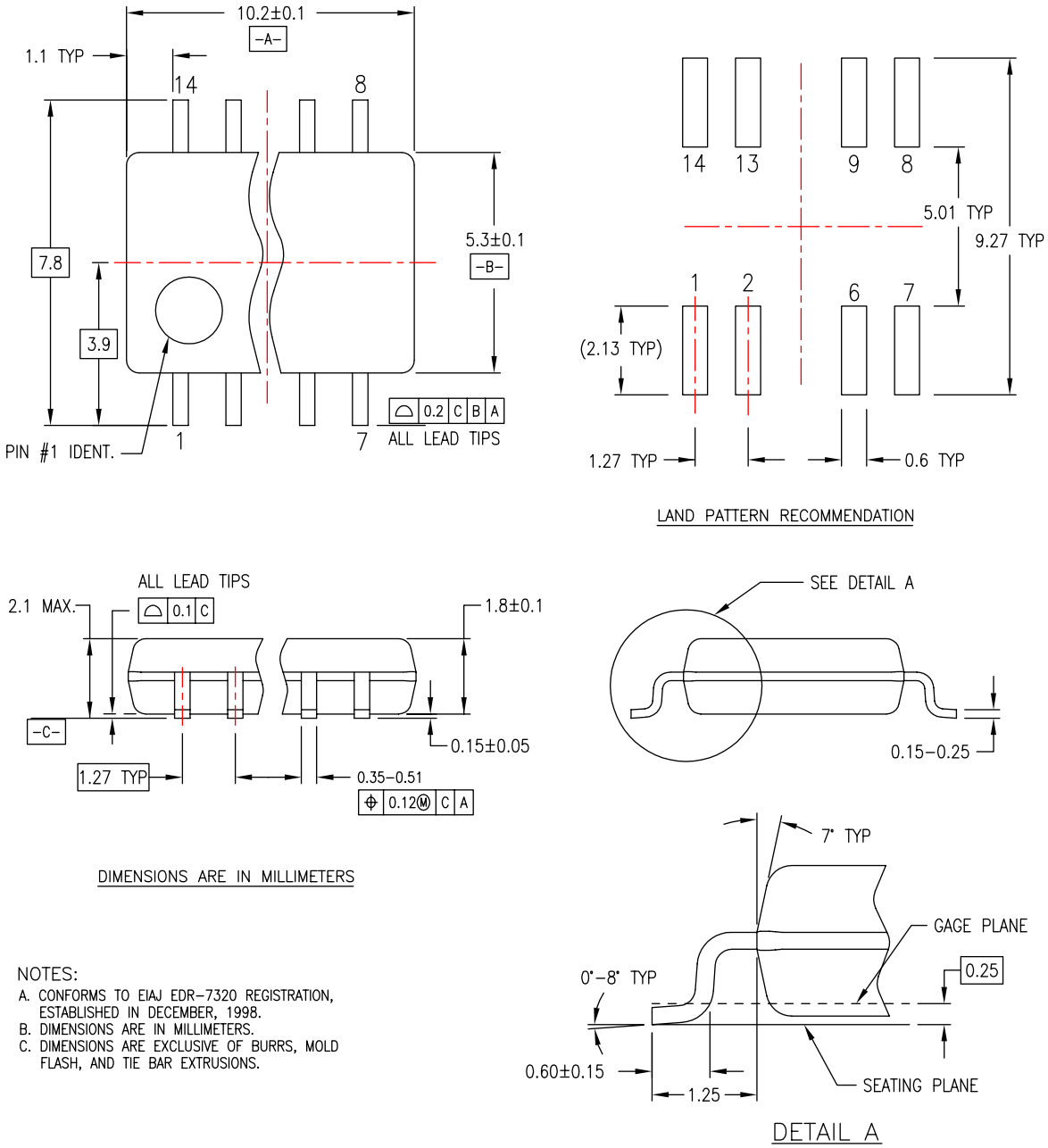

NOTES:
A. CONFORMS TO EIAJ EDR–7320 REGISTRATION, ESTABLISHED IN DECEMBER, 1998.
B. DIMENSIONS ARE IN MILLIMETERS.
C. DIMENSIONS ARE EXCLUSIVE OF BURRS, MOLD FLASH, AND TIE BAR EXTRUSIONS.

Figure 4. 14-Lead Small Outline Package (SOP), EIAJ TYPE II, 5.3mm Wide

Package drawings are provided as a service to customers considering Fairchild components. Drawings may change in any manner without notice. Please note the revision and/or date on the drawing and contact a Fairchild Semiconductor representative to verify or obtain the most recent revision. Package specifications do not expand the terms of Fairchild's worldwide terms and conditions, specifically the warranty therein, which covers Fairchild products.

Always visit Fairchild Semiconductor's online packaging area for the most recent package drawings:

http://www.fairchildsemi.com/packaging/

Physical Dimensions (Continued)

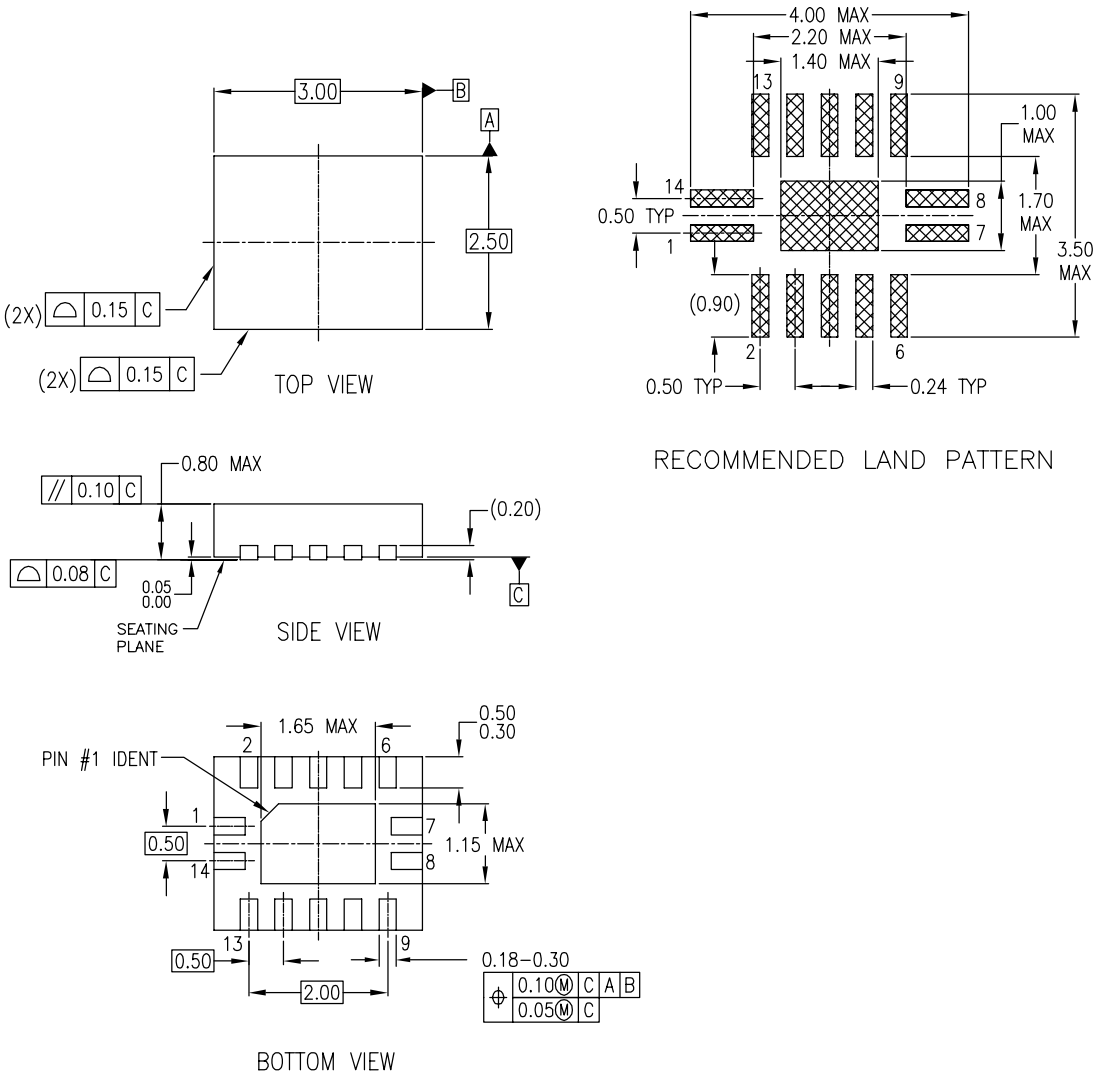

NOTES:

A. CONFORMS TO JEDEC REGISTRATION MO–241, VARIATION AA
B. DIMENSIONS ARE IN MILLIMETERS.
C. DIMENSIONS AND TOLERANCES PER ASME Y14.5M, 1994

MLP14ArevA

Figure 5. 14-Terminal Depopulated Quad Very-Thin Flat Pack No Leads (DQFN), JEDEC MO-241, 2.5 x 3.0mm

Package drawings are provided as a service to customers considering Fairchild components. Drawings may change in any manner without notice. Please note the revision and/or date on the drawing and contact a Fairchild Semiconductor representative to verify or obtain the most recent revision. Package specifications do not expand the terms of Fairchild's worldwide terms and conditions, specifically the warranty therein, which covers Fairchild products.

Always visit Fairchild Semiconductor's online packaging area for the most recent package drawings:

http://www.fairchildsemi.com/packaging/

Physical Dimensions (Continued)

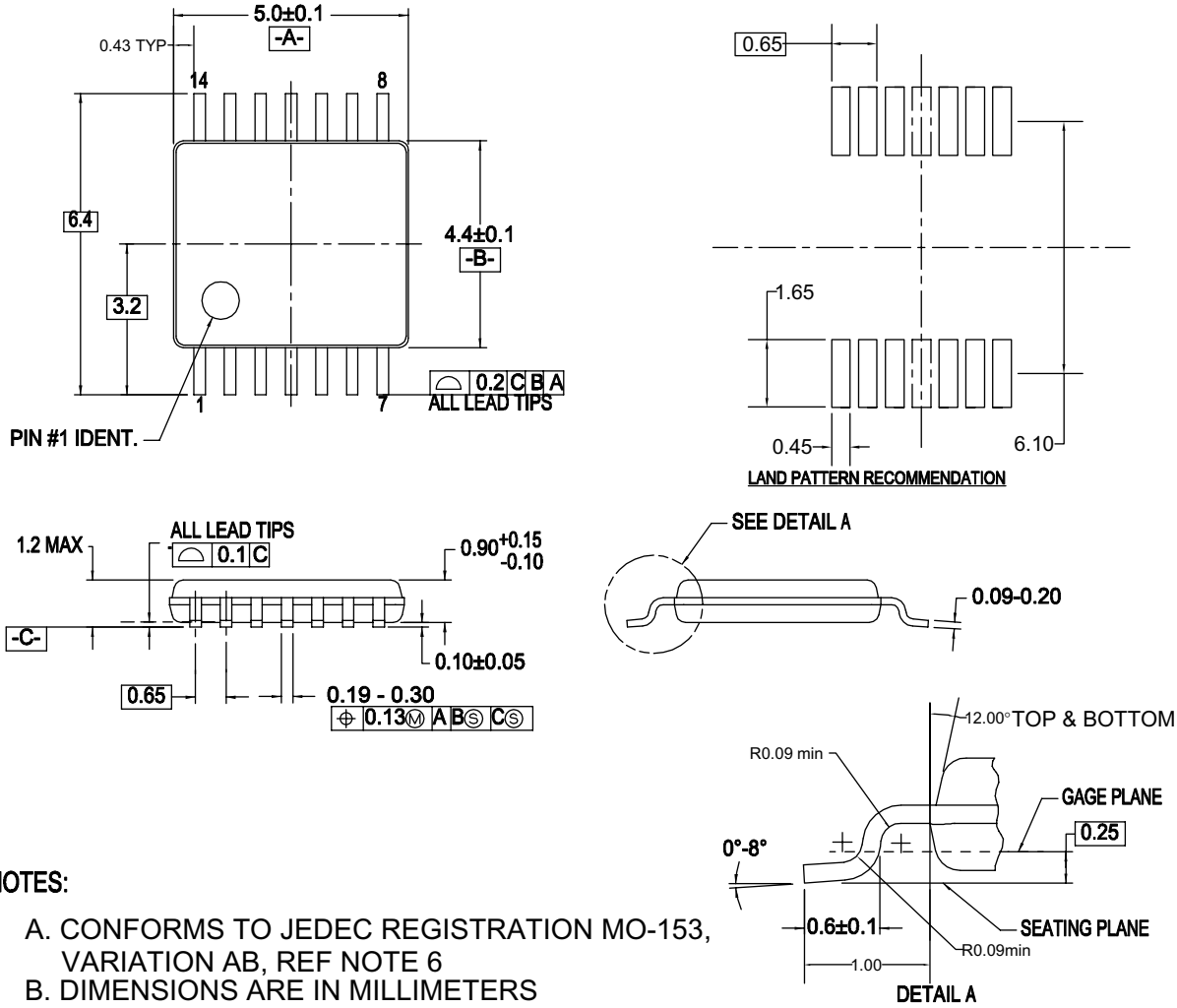

NOTES:

A. CONFORMS TO JEDEC REGISTRATION MO-153, VARIATION AB, REF NOTE 6
B. DIMENSIONS ARE IN MILLIMETERS
C. DIMENSIONS ARE EXCLUSIVE OF BURRS, MOLD FLASH, AND TIE BAR EXTRUSIONS
D. DIMENSIONING AND TOLERANCES PER ANSI Y14.5M, 1982
E. LANDPATTERN STANDARD: SOP65P640X110-14M
F. DRAWING FILE NAME: MTC14REV6

Figure 6. 14-Lead Thin Shrink Small Outline Package (TSSOP), JEDEC MO-153, 4.4mm Wide

Package drawings are provided as a service to customers considering Fairchild components. Drawings may change in any manner without notice. Please note the revision and/or date on the drawing and contact a Fairchild Semiconductor representative to verify or obtain the most recent revision. Package specifications do not expand the terms of Fairchild's worldwide terms and conditions, specifically the warranty therein, which covers Fairchild products.

Always visit Fairchild Semiconductor's online packaging area for the most recent package drawings:

http://www.fairchildsemi.com/packaging/

FAIRCHILD SEMICONDUCTOR®

TRADEMARKS

The following includes registered and unregistered trademarks and service marks, owned by Fairchild Semiconductor and/or its global subsidiaries, and is not intended to be an exhaustive list of all such trademarks.

ACEx®
Build it Now™
CorePLUS™
CROSSVOLT™
CTL™
Current Transfer Logic™
EcoSPARK®
EZSWITCH™ *
EZ™
F®
Fairchild®
Fairchild Semiconductor®
FACT Quiet Series™
FACT®
FAST®
FastvCore™
FlashWriter® *
FPS™
FRFET®
Global Power Resource℠
Green FPS™
Green FPS™ e-Series™
GTO™
i-Lo™
IntelliMAX™
ISOPLANAR™
MegaBuck™
MICROCOUPLER™
MicroFET™
MicroPak™
MillerDrive™
Motion-SPM™
OPTOLOGIC®
OPTOPLANAR®
PDP-SPM™
Power220®
POWEREDGE®
Power-SPM™
PowerTrench®
Programmable Active Droop™
QFET®
QS™
QT Optoelectronics™
Quiet Series™
RapidConfigure™
SMART START™
SPM®
STEALTH™
SuperFET™
SuperSOT™-3
SuperSOT™-6
SuperSOT™-8
SupreMOS™
SyncFET™
SYSTEM GENERAL®
The Power Franchise®
the power franchise
TinyBoost™
TinyBuck™
TinyLogic®
TINYOPTO™
TinyPower™
TinyPWM™
TinyWire™
µSerDes™
UHC®
Ultra FRFET™
UniFET™
VCX™

* EZSWITCH™ and FlashWriter® are trademarks of System General Corporation, used under license by Fairchild Semiconductor.

DISCLAIMER

FAIRCHILD SEMICONDUCTOR RESERVES THE RIGHT TO MAKE CHANGES WITHOUT FURTHER NOTICE TO ANY PRODUCTS HEREIN TO IMPROVE RELIABILITY, FUNCTION, OR DESIGN. FAIRCHILD DOES NOT ASSUME ANY LIABILITY ARISING OUT OF THE APPLICATION OR USE OF ANY PRODUCT OR CIRCUIT DESCRIBED HEREIN; NEITHER DOES IT CONVEY ANY LICENSE UNDER ITS PATENT RIGHTS, NOR THE RIGHTS OF OTHERS. THESE SPECIFICATIONS DO NOT EXPAND THE TERMS OF FAIRCHILD'S WORLDWIDE TERMS AND CONDITIONS, SPECIFICALLY THE WARRANTY THEREIN, WHICH COVERS THESE PRODUCTS.

LIFE SUPPORT POLICY

FAIRCHILD'S PRODUCTS ARE NOT AUTHORIZED FOR USE AS CRITICAL COMPONENTS IN LIFE SUPPORT DEVICES OR SYSTEMS WITHOUT THE EXPRESS WRITTEN APPROVAL OF FAIRCHILD SEMICONDUCTOR CORPORATION.

As used herein:

1. Life support devices or systems are devices or systems which, (a) are intended for surgical implant into the body or (b) support or sustain life, and (c) whose failure to perform when properly used in accordance with instructions for use provided in the labeling, can be reasonably expected to result in a significant injury of the user.
2. A critical component in any component of a life support, device, or system whose failure to perform can be reasonably expected to cause the failure of the life support device or system, or to affect its safety or effectiveness.

PRODUCT STATUS DEFINITIONS

Definition of Terms

Datasheet Identification	Product Status	Definition
Advance Information	Formative or In Design	This datasheet contains the design specifications for product development. Specifications may change in any manner without notice.
Preliminary	First Production	This datasheet contains preliminary data; supplementary data will be published at a later date. Fairchild Semiconductor reserves the right to make changes at any time without notice to improve design.
No Identification Needed	Full Production	This datasheet contains final specifications. Fairchild Semiconductor reserves the right to make changes at any time without notice to improve the design.
Obsolete	Not In Production	This datasheet contains specifications on a product that has been discontinued by Fairchild Semiconductor. The datasheet is printed for reference information only.

Rev. I33

Компания «ЭлектроПласт» предлагает заключение долгосрочных отношений при поставках импортных электронных компонентов на взаимовыгодных условиях!

Наши преимущества:

- Оперативные поставки широкого спектра электронных компонентов отечественного и импортного производства напрямую от производителей и с крупнейших мировых складов;
- Поставка более 17-ти миллионов наименований электронных компонентов;
- Поставка сложных, дефицитных, либо снятых с производства позиций;
- Оперативные сроки поставки под заказ (от 5 рабочих дней);
- Экспресс доставка в любую точку России;
- Техническая поддержка проекта, помощь в подборе аналогов, поставка прототипов;
- Система менеджмента качества сертифицирована по Международному стандарту ISO 9001;
- Лицензия ФСБ на осуществление работ с использованием сведений, составляющих государственную тайну;
- Поставка специализированных компонентов (Xilinx, Altera, Analog Devices, Intersil, Interpoint, Microsemi, Aeroflex, Peregrine, Syfer, Eurofarad, Texas Instrument, Miteq, Cobham, E2V, MA-COM, Hittite, Mini-Circuits,General Dynamics и др.);

Помимо этого, одним из направлений компании «ЭлектроПласт» является направление «Источники питания». Мы предлагаем Вам помощь Конструкторского отдела:

- Подбор оптимального решения, техническое обоснование при выборе компонента;
- Подбор аналогов;
- Консультации по применению компонента;
- Поставка образцов и прототипов;
- Техническая поддержка проекта;
- Защита от снятия компонента с производства.

Как с нами связаться

Телефон: 8 (812) 309 58 32 (многоканальный)
Факс: 8 (812) 320-02-42
Электронная почта: org@eplast1.ru
Адрес: 198099, г. Санкт-Петербург, ул. Калинина, дом 2, корпус 4, литера А.