Motor Protective Relay
K2CM

CSM_K2CM_DS_E_5_1

Solid-state Relay Enables Choice of Three Operating Functions (Overcurrent, Open-phase, and Reverse-phase)

- Protects 3-phase induction motors and their loads from damage.
- Selection and combination of operating functions from overcurrent, open-phase, and reverse-phase.
- Circuit and output relay operation can be checked by just operating the test button.
- The set time value can be checked easily because operation time is indicated from the start of operation.
- Space-saving, integrated construction.

Note: If the K2CM is used with an inverter, the operating conditions will depend on the load wiring length, inverter carrier frequency, basic frequency, and load conditions. Error will occur in the operating values of the overload elements. It is recommended to test operation before using the K2CM.

Model Number Structure

■ Model Number Legend

K2CM-□□□-□□
1 2 3 4 5 6

1. **Model**
   K2CM: Motor relay
2. **Mounting style**
   None: Surface-mounting, integrated type
3. **Operating time characteristics**
   None: Inverse type
   Q: Instantaneous type
4. **Supply voltage of control circuit**
   1: 100/110/120 VAC
   2: 200/220/240 VAC
   4: 400/440 VAC
5. **Current setting range**
   LS: 2 to 8 A
   L: 8 to 26 A
   M: 20 to 65 A
   H: 50 to 160 A
6. **Operating time**
   None: ×1 (2 to 10 s)/ ×4 (8 to 40 s) Switchable
7. **Resetting method**
   None: Manual reset
   A: Automatic reset
8. **Reverse-phase detection type**
   None: Current reverse-phase detection
   V: Voltage reverse-phase detection

Ordering Information

■ List of Models

Voltage Reverse-phase Detection Models

Resetting method	Time specification / Current setting range / Operating voltage	Inverse type			Instantaneous type		
		8 to 26 A	20 to 65 A	50 to 160 A	8 to 26 A	20 to 65 A	50 to 160 A
Manual	**200/220/240 VAC**	K2CM-2LV	K2CM-2MV	K2CM-2HV	K2CM-Q2LV	K2CM-Q2MV	K2CM-Q2HV
Automatic	**200/220/240 VAC**	K2CM-2LAV	K2CM-2MAV	K2CM-2HAV	K2CM-Q2LAV	K2CM-Q2MAV	K2CM-Q2HAV

Current Reverse-phase Detection Models

Resetting method	Time specification / Current setting range / Operating voltage	Inverse type				Instantaneous type			
		2 to 8 A	8 to 26 A	20 to 65 A	50 to 160 A	2 to 8 A	8 to 26 A	20 to 65 A	50 to 160 A
Manual	100/110/120 VAC	K2CM-1LS	K2CM-1L	K2CM-1M	K2CM-1H	K2CM-Q1LS	K2CM-Q1L	K2CM-Q1M	K2CM-Q1H
	200/220/240 VAC	K2CM-2LS	K2CM-2L	K2CM-2M	K2CM-2H	K2CM-Q2LS	K2CM-Q2L	K2CM-Q2M	K2CM-Q2H
	400/440 VAC	---	K2CM-4L	K2CM-4M	K2CM-4H	---	K2CM-Q4L	K2CM-Q4M	K2CM-Q4H
Automatic (See note.)	100/110/120 VAC	K2CM-1LSA	K2CM-1LA	K2CM-1MA	K2CM-1HA	K2CM-Q1LSA	K2CM-Q1LA	K2CM-Q1MA	K2CM-Q1HA
	200/220/240 VAC	K2CM-2LSA	K2CM-2LA	K2CM-2MA	K2CM-2HA	K2CM-Q2LSA	K2CM-Q2LA	K2CM-Q2MA	K2CM-Q2HA
	400/440 VAC	---	K2CM-4LA	K2CM-4MA	K2CM-4HA	---	K2CM-Q4LA	K2CM-Q4MA	K2CM-Q4HA

Note: The manual resetting method must be used with reverse-phase detection.

■ Related Product

Transformer

Model	Voltage specification		Secondary power consumption
SE-PT400	Primary side	380 to 480 V (wide power supply range)	7VA
	Secondary side	190 to 240 V (wide power supply range)	

Note: Use this Transformer when a voltage reverse-phase detection model is used on a 400-V line.

Specifications

■ Ratings

Other features, such as 100% overcurrent capacity and flush mounting are also available. See *Model Number Legend* on page 1 for details.

Supply voltage of motor circuit	200/220, 400/440 VAC, 50/60 Hz
Supply voltage of control circuit	100/110/120, 200/220/240, 400/440 VAC, 50/60 Hz
Insulation breakdown of output contact	500 VAC
Operating voltage/current of output contact (pf = 0.4 when breaking contact)	NO contact: 120 VAC/2 A, 240 VAC/1 A, 440 VAC/0.5 A, 110 VDC/0.2 A, 220 VDC/0.1 A NC contact: 120 VAC/5 A, 240 VAC/2 A, 440 VAC/1 A, 110 VDC/0.2 A, 220 VDC/0.1 A
Contact form of output contact	Current reverse-phase detection models: SPST-NO + SPST-NC Voltage reverse-phase detection models: SPDT
Operating current range of input circuit	2 to 160 A (Number of passes: 1)
Operating voltage range of control circuit	85% to 110% of rated voltage, but operates normally at 50% of open-phase supply voltage
Operating frequency range of control circuit	95% to 105% of rated frequency
Power consumption	Approx. 3 VA (in standby state); 5 VA (in operating state)
Overcurrent function operating value	115 ±10% of the setting value
Overcurrent function operating time setting range	Inverse Type Inverse time both at startup and during operation: Timer scale × 1 (s) at 600% overload Timer scale × 3 (s) at 200% overload **Note:** The above values are for a time factor setting of 1. Instantaneous Type Fixed time at starting (start-up lock) • Time setting value (varies between 2 and 40 s) at 140% overload and starting Instantaneous during operation: 0.5 s max. (when current is increased from 100 to 140% of the set current value)
Case color	Munsell 5Y7/1
Overcurrent function operating time characteristics	Inverse type: ±10% of maximum setting value (at 600% overload) Instantaneous type: ±20% of maximum setting value (at 140% overcurrent and at starting)
Overcurrent function resetting value	100% min. of the setting value
Overcurrent function start-up operating value	Inverse type: Not applicable Instantaneous type: 30% max. of the setting value (See note.)
Open-phase operating value	85% max. of the set current value (at open-phase)
Open-phase operating time	2 s max. (at overcurrent operating value)
Reverse-phase operating value	50% max. of the current value (80% max. of the operating voltage)
Reverse-phase operating time	1 s max. (at overcurrent operating value)
Imbalance operating value	85% of the set current value
Current imbalance factor	High: 35 ±10%; Low: 60% min. (at overcurrent operating value) where $\text{Imbalance factor} = \frac{\text{Reverse phase portion}}{\text{Normal phase portion}} \times 100\ (\%)$

Note: The start-up lock timer restarts when the operating value at starting becomes less than 30% of the set current value.

■ Characteristics

Variation due to temperature fluctuation	**At 20 ±20 °C**	Overcurrent: ±5% of operating value, ±10% of operating time Open-phase: ±10% of operating value, ±10% of operating time Reverse-phase: ±10% of operating value, ±10% of operating time
	At 20 ±30 °C	Overcurrent: ±10% of operating value, ±20% of operating time Open-phase: ±20% of operating value, ±20% of operating time Reverse-phase: ±20% of operating value, ±20% of operating time
Variation due to voltage fluctuation	**At 85% to 110% of rated voltage**	Overcurrent: ±5% of operating value, ±10% of operating time Open-phase: ±5% of operating value, ±10% of operating time Reverse-phase: ±5% of operating value, ±10% of operating time
Variation due to frequency fluctuation	**At 95% to 105% of rated frequency**	
Insulation resistance		10 MΩ min. (between current-carrying terminals and mounting panel) 5 MΩ min. (between current-carrying terminals and between contact poles)
Dielectric strength		2,500 VAC (between current-carrying terminals and mounting panel and between current-carrying terminals) 1,000 VAC (between contact poles)
Permissible impulse voltage		Current reverse-phase detection models: 6,000 V (between current-carrying terminals and mounting panel) 4,500 V (between current-carrying terminals and between control power supply terminals) Waveform: 1.2/50 μs Voltage reverse-phase detection models: 4,500 V (between current-carrying terminals and mounting panel) Waveform: 1.2/50 μs
Overcurrent strength of main circuit		No abnormality develops when 20 times the set current value is applied for 2 s, 2 times with a 1-minute interval.
Overvoltage strength of control power supply circuit		No abnormality develops when 1.15 times the relay's rated voltage is applied once for 3 hours.
Variation due to waveform distortion		No malfunction occurs when pulse containing 100% of the 2nd to 9th harmonics is applied (open-phase switch set to "Low"). (See note.)
Vibration		Malfunction: 10 to 55 Hz, 0.3-mm double amplitude (in X, Y, and Z directions for 10 minutes each) Destruction: 10 to 25 Hz, 2-mm double amplitude (in X, Y, and Z directions for 2 hours each)
Shock		Malfunction: 98 m/s^2 (approx. 10 G) in X, Y, and Z directions Destruction: 294 m/s^2 (approx. 30 G) in X, Y, and Z directions
Test current (reference only)	**Operating time**	Set time value
	Setting characteristics of operating time	Approx. ±30% of the maximum setting value
Service life		Electrical: 10,000 operations
Ambient temperature		Operating: –10 to 60 °C (with no icing) Storage: –25 to 65 °C
Humidity		35% to 85%
Altitude		2,000 m max.

Note: This means that no malfunction occurs with the open-phase element, but the operating value of the overload element may vary.

Connections

■ Voltage Reverse-phase Detection Models

Terminal Arrangement

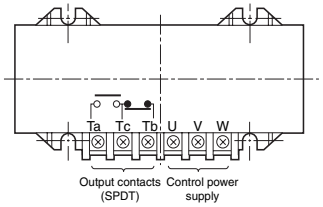

- Perform the external connections by referring to the examples given below.
- Obtain the control power supply from the same phase as the power supply to the magnet contactor coil.
- Connect the phase advancing capacitors closer to the power supply than the current transformer, as shown in the examples.
- Tighten the terminal screws to a torque of 0.98 N·m max. (The appropriate tightening torque is 0.49 to 0.67 N·m.)
- Use of insulated solderless terminals is recommended for connection to the Relay terminals (M3.5).

Note: 1. In principle, the K2CM must be surface mounted with the terminal block facing downward.
2. Use M5 screws with spring washers and flat washers for mounting. Tighten the screws to a torque of 1.77 N·m max. (The appropriate tightening torque is 1.08 to 1.57 N·m.)

Manual Operation Low-voltage Circuit

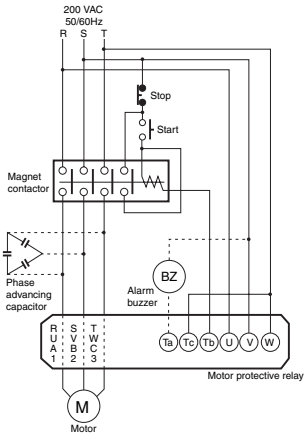

Manual Operating Low-voltage Circuit (人–△ Start)

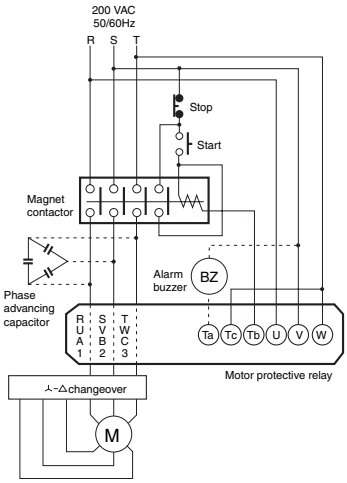

Manual Operation Low-voltage Circuit (High-capacity Motor)

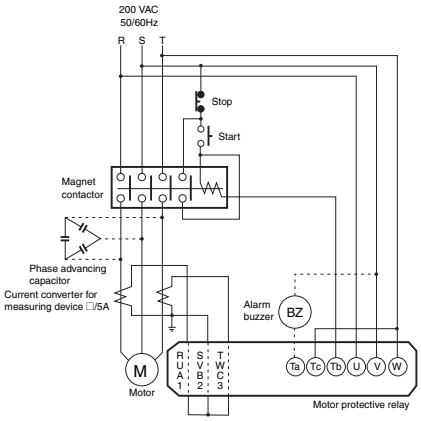

Automatic Operation Low-voltage Circuit

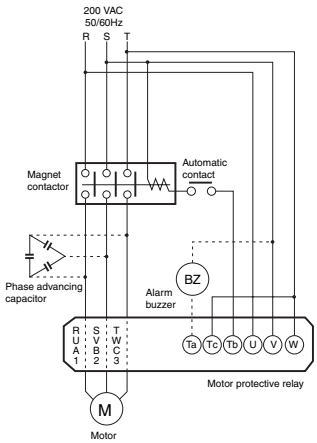

Manual Operation High-voltage Circuit

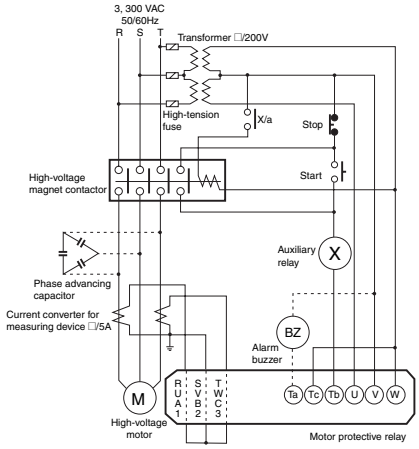

Note: Connect the phase advancing capacitor on the power supply side of the Motor Protective Relay as shown in the above diagrams.

■ Current Reverse-phase Detection Models

Terminal Arrangement

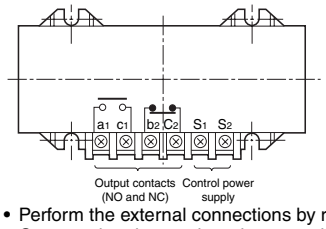

- Perform the external connections by referring to the examples given below.
- Connect the phase advancing capacitors closer to the power supply than the current transformer as shown in the examples.
- Tighten the terminal screws to a torque of 0.98 N·m max. (The appropriate tightening torque is 0.49 to 0.67 N·m.)
- Use of insulated solderless terminals is recommended for connection to the Relay terminals (M3.5).

Note: 1. In principle, the K2CM must be surface mounted with the terminal block facing downward.
2. Use M5 screws with spring washers and flat washers for mounting. Tighten the screws to a torque of 1.77 N·m max. (The appropriate tightening torque is 1.08 to 1.57 N·m.)

Manual Operation Low-voltage Circuit

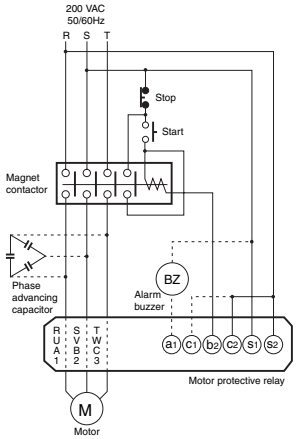

Manual Operating Low-voltage Circuit (⅄–△ Start)

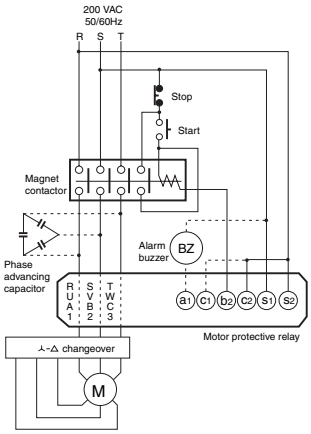

Note: Connect the phase advancing capacitor on the power supply side of the Motor Protective Relay as shown in the above diagrams.

Manual Operation Low-voltage Circuit (High-capacity Motor)

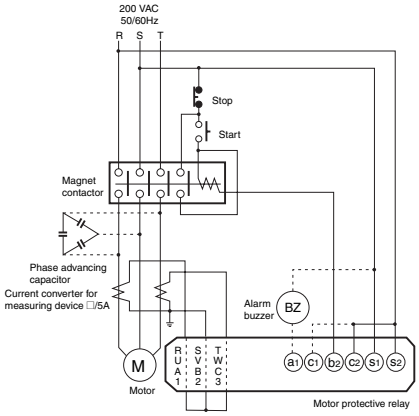

Automatic Operation Low-voltage Circuit

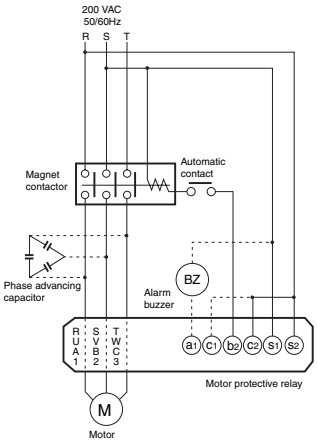

Manual Operation High-voltage Circuit

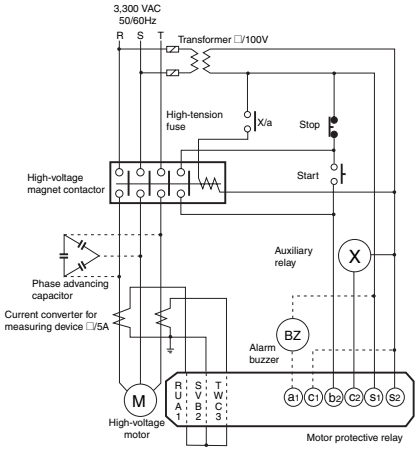

Output Circuits

■ Internal Circuit and Operation Description

Inverse and Instantaneous Types

As shown on the right, the K2CM detects abnormalities in motor M by checking its line current. The motor's current signal is detected by the current transformer and is processed separately for each phase and input to the respective circuits. In each circuit, parallel judgement of failure such as overcurrent, open-phase, or reverse-phase (see note) is made based on the input signals. If a failure is detected in a circuit, the circuit's output is input to the indication circuit to illuminate the corresponding LED indicator and also input to the relay drive circuit to drive relay X, resulting in a trip signal to be externally output from it. The three major circuits are described below.

Note: Applies to current reverse-phase detection models only.

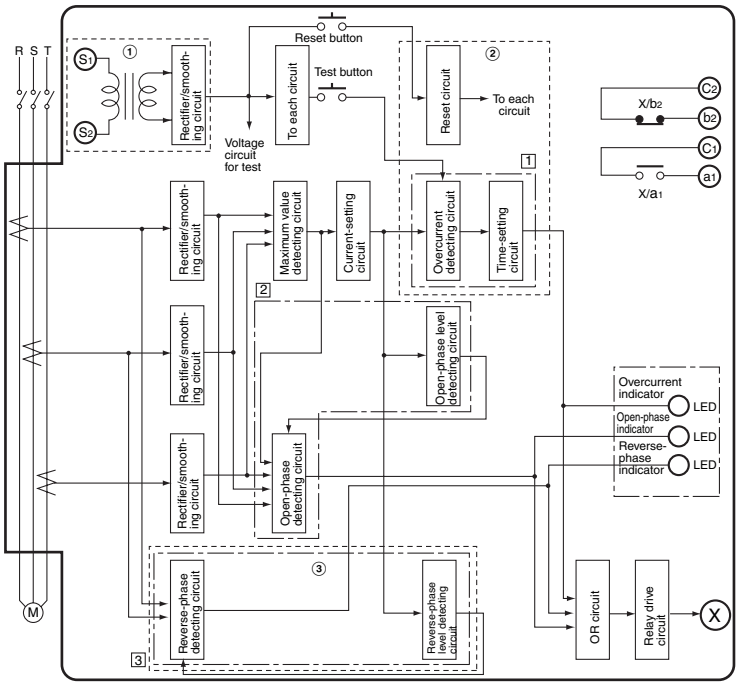

Voltage Reverse-phase Detection Models

With the voltage reverse-phase detection models, the circuit section enclosed by ① in the diagram on the left is configured as shown below. The circuit section enclosed by ③ is not used.

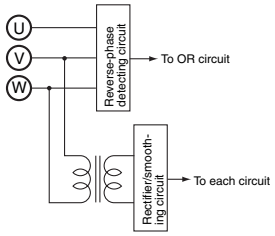

Instantaneous Type

With instantaneous-type models, the circuit section enclosed by ② is configured as shown below.

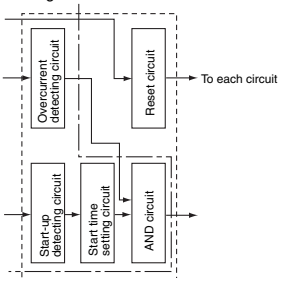

1) Overcurrent Circuit

Overcurrent Detecting Circuit

This circuit detects when the current reaches the overcurrent operating level (115% of the set current value).

Time Setting Circuit (Inverse Type)

This circuit performs time setting using the VR (variable resistor) for the operating time setting and obtains inverse-type characteristics using an RC time-limiting circuit. The operating time can be set within a range from 2 to 10 s or 8 to 40 s by operating the setting switch using a VR. The VR covers a time range 5 times the standard range.

Start-up Detecting Circuit (Instantaneous Type)

Instantaneous-type models output a trip signal instantaneously when the motor current exceeds the overcurrent operating value (115% of the set current value). At the start of motor operation, a starting current several times the rated current flows and so to prevent the motor circuit being tripped by the starting current, instantaneous operation is not enabled until a fixed time tc has elapsed, as shown in the figure. Instantaneous operation starts after tc has elapsed. Motor starting time "to" varies, depending on motor type, within a range from several seconds to several tens of seconds. There are even slight differences in starting time between the same type of motors and so be sure to set tc so that to<tc is satisfied. If to>tc, the motor circuit will be tripped after tc has elapsed. The fixed time limit tc at the start of motor operation is called "lock time". The start-up detecting circuit detects the starting operation level (30% max. of the set current time).

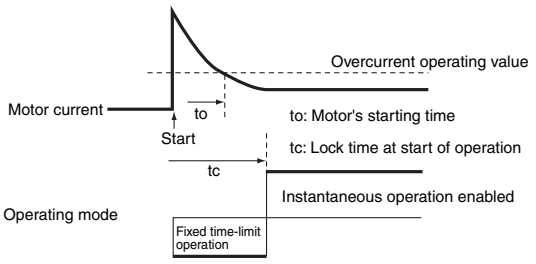

Starting Time Setting Circuit (Instantaneous Type)

This circuit performs time setting using the VR for setting the start-up lock time and obtains fixed time-limit characteristics using an RC time-limiting circuit.

Operation at start-up is shown in the figure below. After the motor turns ON at point A, the motor's starting current exceeds the start-up operating value and so the RC time-limiting circuit starts charging. If, for example, the motor current descends below the start-up operating value (30% max. of the set current value) at point B before the start-up lock time, tc, has elapsed, the RC time-limiting circuit is reset immediately and when the motor current rises above the start-up operating value again at point C, the RC time-limiting circuit starts charging again. After the start-up lock time has elapsed (at point D), instantaneous operation is enabled. At the start of operation, the motor current is at its peak immediately after operation starts. It then lowers and settles at the rated current. The peak current is about 5 to 6 times the rated current and takes from several seconds to several tens of seconds to settle to the rated current. This time varies largely depending on type of motor and the nature of motor load (wt). Therefore, it is necessary to obtain the motor's starting time for operation with the load and to set a start-up lock time that allows for a margin of error. Do not set an unnecessarily long start-up lock time. If the start-up lock time is too long and an accident due to overcurrent occurs at the start of operation, the trip signal will not be output until the start-up lock time has elapsed, possibly resulting in motor burnout.

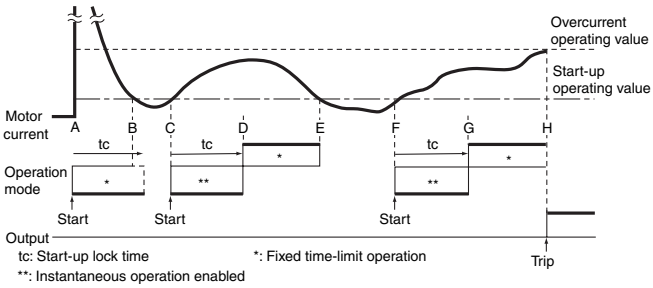

2) Open-phase Circuit

Open-phase Level Detecting Circuit

This circuit detects when the current reaches the open-phase operating level (85% max. of the set current value). Therefore, open-phase is not detected until the maximum phase of the current exceeds 85% of the set current value.

Open-phase Detecting Circuit

Output of the maximum value detecting circuit is divided and used as reference values for comparison with the output of the rectifier/smoothing circuits for the respective phases. If a phase has a value lower than the reference value, the K2CM judges it to be open-phase and outputs an open-phase signal.

The following imbalance factors can be selected by setting the open-phase switch.

"High" . . Operating imbalance factor: 35 ±10%

"Low". . . Operating imbalance factor: 60% min.

The imbalance factor can be easily obtained from the following graph. In the graph, the horizontal axis indicates the maximum phase of the current whereas the two vertical axes indicate the remaining two phases. The maximum phase of the current is taken to be 1.0 as a reference point. The imbalance factor is obtained as a percentage from the curve around the center of the graph. Obtain the imbalance factor for a motor current with I_R = 100 A, I_S = 0.7 A, and I_T = 0.6 A as follows:

1. On the R axis, locate point A, where I_R = 1.0.
2. Move from point A to point B, where I_S = 0.7 on the S axis.
3. On the T axis, locate point C, where I_T = 0.6.
4. Follow the curves that pass through points B and C and locate the intersection point D.
5. Locating the point corresponding to point D on the imbalance factor curve gives an imbalance factor of 36%. Take the maximum phase of current on the horizontal axis without considering axes R, S, and T.

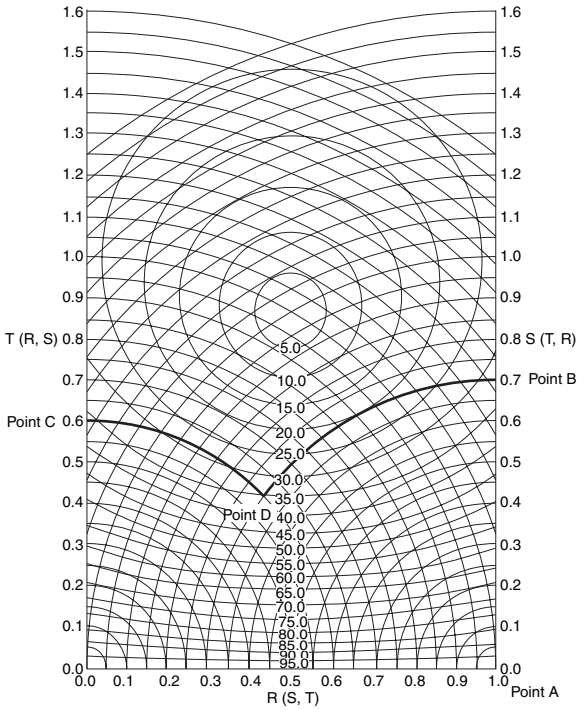

Generally, in open-phase detection, detecting a complete open-phase is sufficient. In such a case, set the open-phase switch to the "Low" position. If using the motor in an imbalanced condition causes problems, or when detecting internal open-phases of a delta-connected motor, set the switch to the "High" position. Depending on the motor's load condition and the imbalance of the power supply, however, special consideration may be required for the detection of internal open-phases in delta-connected motors. Consult your OMRON representative before using this method. When a transformer is connected as a load, the harmonics increase at low loads. Therefore, in such a case, set the open-phase switch to the "Low" position.

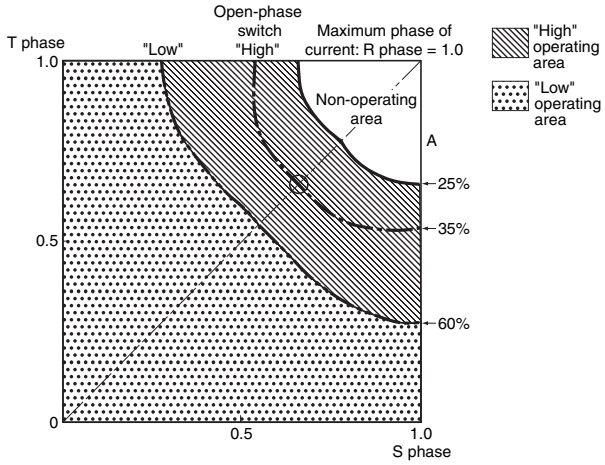

3) Reverse-phase Circuit

1. Current Reverse-phase Detection Models

Reverse-phase Level Detecting Circuit

This circuit detects whether the current is in the operating level (50% max. of the set current value) as a precondition to detect the reverse-phase.

Reverse-phase Detecting Circuit

The current reverse-phase detecting method is employed for detecting reverse-phase as shown below. After the motor starts operating, the current phase becomes transiently unstable during T1 (approx. 0.4 s) and so reverse-phase detection is not performed during this period but it is performed during T2 (approx. 0.1 s). After T2 has elapsed, reverse-phase detection is not performed. For this reason, this method cannot be applied to cases where instantaneous reverse-phase is not permitted. When a reverse-phase is detected, the relay is held in the latched state even after the motor current stops (in both manual and automatic release types).

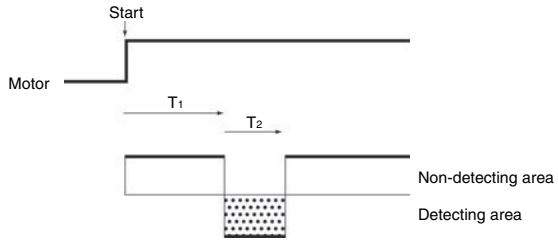

2. Voltage Reverse-phase Detection Models

Reverse-phase Detecting Circuit

Reverse-phase detecting is performed by using the voltage reverse-phase detection method.

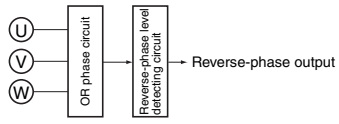

By voltage division within the above RC phase circuit, the output becomes 0 V in the normal state or 1.5 V_{uv} in the reverse-phase state. Using the output from this circuit, the reverse-phase level detecting circuit detects when the current reaches the reverse-phase operating level (80% or less of the control power supply).

Nomenclature

Trip Indicator

In normal operation, only the upper half of the display window is colored orange, whereas when the motor circuit has tripped, the entire display window becomes orange.

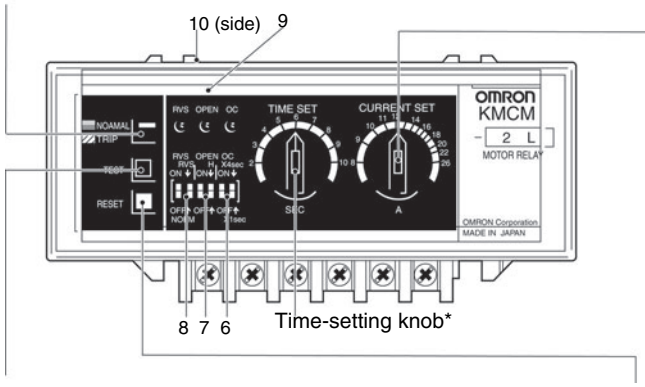

Current-setting Knob

- By operating the setting knob, set the current value to be equal to the rated current of the motor to be used. The current-setting knob uses the same scale as the rated current. Therefore, the operating value will be 115% of the set current value.
  Example: Operating current value
  = 12 × 1.15 (115%) = 13.8 A
- The List of Current Settings shows an example. The rated current differs depending on the motor's type, construction, manufacturer, etc. Therefore, set the operating current after checking the specifications of the motor.

Test Button

Inverse Type

- Operation checks of the overcurrent function can be performed.
- Pressing the test button for the time-setting value will cause the motor circuit to trip.
- With manual resetting models, even if the test button is released after the motor circuit has tripped, the circuit remains tripped, whereas with automatic resetting models, the motor circuit continues operating and the output relay releases.
- Be sure to perform the test operation with the overcurrent switch set to ON. Set both the open-phase and reverse-phase switches to OFF. If one of these switches is set to ON, the motor circuit may trip if an open-phase or reverse-phase occurs before an overcurrent does.

Instantaneous Type

- Perform the test operation with input current at 0 and the overcurrent switch set to ON.
- Pressing the test button for the set start-up lock time will cause the motor circuit to trip.
- With manual resetting models, even if the test button is released after the motor circuit has tripped, the circuit remains tripped, whereas with automatic resetting models, the motor circuit continues operating and the output relay releases.

Time-setting Knob

- Set the required operating time by operating the time-setting knob. (With instantaneous-type models, the set operating time is used as the start-up lock time).

Note: 1. The setting scale is the operating time when 600% of the current value is input.

2. The required operating time varies depending on the type of motor, load condition, etc. You can take the time from when the motor starts to when the motor enters the steady state as a guide for setting this value. When setting the operating time for submersible motors, which require very short operating times, consult the manufacturer to obtain the correct operating time. An operating time shorter than 5 s can be used as a rough guide.

- The scale multiplying factor can be selected by the time scale multiplying factor switch.

Scale multiplying factor	Time scale multiplying factor switch	
Time scale value	**× 1 (s)**	**× 4 (s)**
2	2	8
3	3	12
4	4	16
5	5	20
6	6	24
7	7	28
8	8	32
9	9	36
10	10	40

Reset Button

- With manual resetting models, when the motor circuit trips during normal operation or test operation, the operation indicators and the output relay can be immediately reset by pressing the reset button.
- When the motor circuit trips due to reverse-phase with automatic resetting models, the operation indicators and the output relay can be immediately reset by pressing the reset button.
- Reset button operation is ineffective when the operation power supply is OFF. When the motor circuit trips during normal operation, identify the abnormal input function by checking the LED indicators, then turn OFF the power switch of the main circuit and proceed with troubleshooting. After the abnormality is removed, turn ON the power switch of the main circuit to reset the K2CM.

Deciding the Number of Primary Conductor Passes

- When using a motor with a small current rating, decide the number of primary conductor passes through the current transformer holes and the tap setting by referring to the List of Current Settings.
- Pass all the three wires through the respective holes of the current transformer. Basically, the wires should be passed through the specified holes. If this is difficult, however, they can be passed through any holes provided that the phase order is R, S, and T.

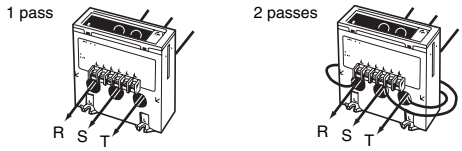

- If the wires are passed through the holes only once, a current within the full scale of the current-setting knob can be set. If they are passed more than once, however, the current setting range will change according to the number of passes. The current setting range when the number of conductor passes is n can be obtained by dividing the full scale of the current-setting knob by n. For example, the current setting range of the K2CM-□□L□ is 8 to 26 A when the wires are passed only once. This range is 4 to 13 A when the wires are passed twice, 2 to 6.5 A when the wires are passed four times, and 1 to 3.25 A when the wires are passed eight times.
  The wires can be passed through the holes any number of times. It is convenient for the calculation, however, if the number of passes is 2, 4, or 8.
- The signal from a high-voltage motor is input to the Motor Protective Relay via an external current transformer. In this case, the current can be set in the same manner as above by dividing the rated current of the high-voltage motor by the transformation ratio of the current transformer.

LED Indicators

When the motor circuit trips due to overcurrent, open-phase, or reverse-phase, the respective LED indicator lights (continuously). The overcurrent indicator also indicates the start of operation.

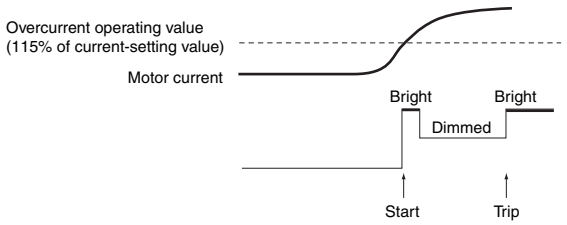

- With the inverse-type models, when the motor current exceeds the overcurrent operating value, the overcurrent indicator blinks at the bright level and then remains lit at the dimmed level. After the operating time has elapsed, with the manual resetting models, the motor circuit trips and the overcurrent indicator remains lit at the bright level, whereas with automatic resetting models, the indicator remains lit at the bright level until the motor current descends below the resetting value.
- Since the indicator status is not stored in memory when the operation power supply is turned OFF, be sure to check which indicators were illuminated when the motor circuit was tripped.

The functions of the K2CM can be used in the following seven combinations. For each function, turn ON the corresponding setting switch.

Function / Combination	Overcurrent	Open-phase	Reverse-phase
1	ON		
2		ON	
3			ON
4	ON	ON	
5		ON	ON
6	ON		ON
7	ON	ON	ON

When the setting switches for overcurrent, open-phase, or reverse-phase function are turned OFF, the following functions becomes invalid.

Function setting switch set to OFF	Invalid function
Overcurrent	Time setting and multiplication
Open-phase	“High” and “Low” imbalance factors
Reverse-phase	“Forward” and “Reverse” function

1. Overcurrent Setting Switches

These switches select the overcurrent setting and the multiplying factor linked with operating time setting.

Overcurrent detecting function	**ON**	Enabled
	OFF	Disabled
Time setting multiplying factor	**× 4 (s)**	Time setting scale value × 4 = 8 to 40 s
	× 1 (s)	Time setting scale value × 1 = 2 to 10 s

2. Open-phase Setting Switches

These switches select the open-phase detecting function and the “High” or “Low” current imbalance factor for operation.

Open-phase detecting function	**ON**	Enabled
	OFF	Disabled
Imbalance factor	**High**	The motor circuit operates at an operating imbalance factor of 35 ±10%.
	Low	The motor circuit operates at an operating imbalance factor of 60%.

3. Reverse-phase Setting Switches

These switches select the reverse-phase detection function and reverse-phase polarity. By selecting the reverse-phase polarity accordingly, the K2CM can operate normally without changing the connections when wired with the order of the phases reversed.

Reverse-phase detecting function	**ON**	Enabled
	OFF	Disabled
Reverse-phase polarity	**Normal**	The motor circuit trips at reverse-phase when a reverse-phase is detected.
	Reverse	Used when a reverse-phase connection is made in the power line of the motor at a point before the current transformer (including external current transformer).

If the K2CM detects reverse-phase although the motor is rotating in the forward direction (e.g., because of incorrect wiring of power lines), set the reverse-phase polarity switch to the “Reverse” position to enable normal operation.

Phase condition	Normal	Reverse	Reverse
Connections	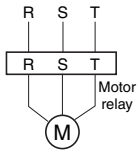	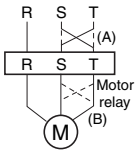	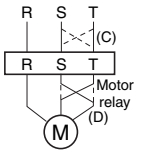
Reverse-phase polarity switch position	Normal	Normal	Normal
Trip	None	Yes	None
Direction of motor rotation	Forward	Reverse (See below.)	Reverse

Counter-measure	**Reverse-phase polarity switch position**		Reverse	Reverse	Reverse	Reverse
	Wiring		Wiring changed at (A).	Wiring changed at (B).	Wiring changed at (C).	Wiring changed at (D).

Direction of motor rotation	Forward

Note: The K2CM detects reverse-phase at a point before the current transformer. If a reverse connection is made at the load side far from the current transformer and the motor rotates in the reverse direction, the K2CM does not detect the reverse-phase.

Reverse-detectable Range

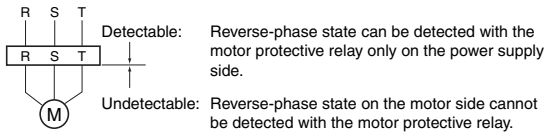

* The reverse-phase polarity switching function is applicable to current reverse-phase detection models only.

Engineering Data

Overload Operating Time Characteristics for Inverse Type

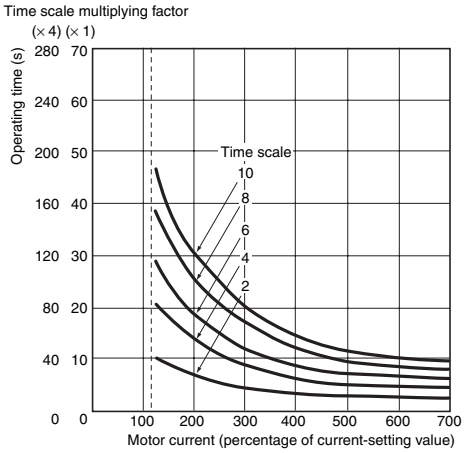

Overload Operating Time Characteristics for Instantaneous Type

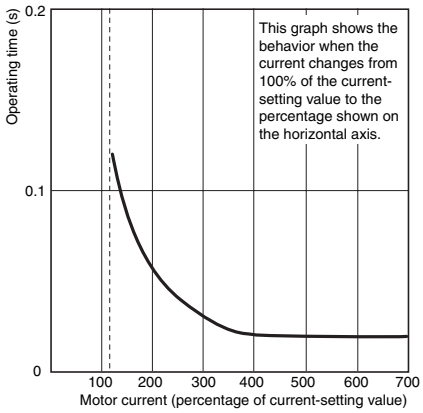

Typical Characteristics of Open-phase Operation

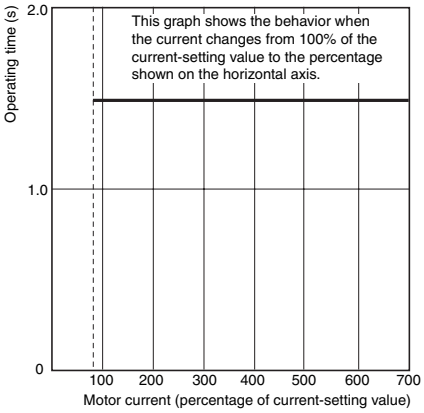

Typical Characteristics of Reverse-phase Operation

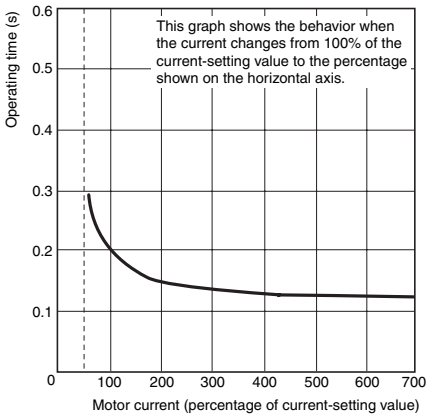

Dimensions

Note: All units are in millimeters unless otherwise indicated.

Surface-mounting Models

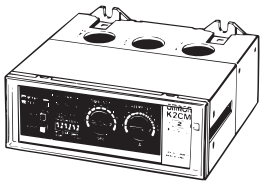

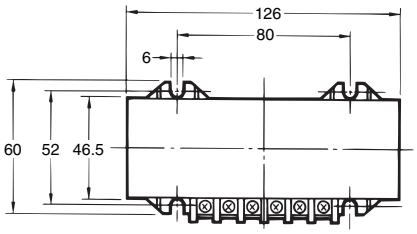

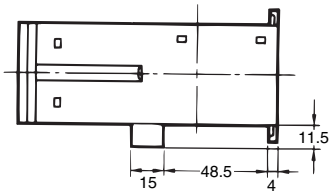

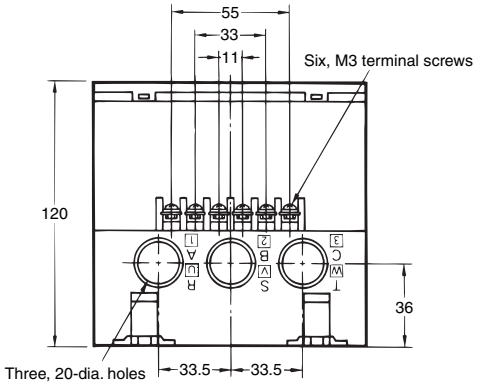

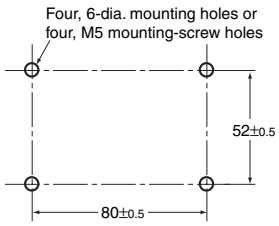

Operating Procedures

■ Operation, Setting, and Indication

Based on the current value of the motor to be used, perform the setting of each item of the K2CM Motor Protective Relay.

List of Current Settings (when using a 200-VAC motor)

Type*		K2CM-□□LS□	K2CM-□□L□				K2CM-□□M□	K2CM-□□H□
Number of passes		1	1	2	4	8	1	1
Setting	Time scale value	2 to 8	8 to 26				20 to 65	50 to 160
	Current setting range (A)	2 to 8	8 to 26	4 to 13	2 to 6.5	1 to 3.25	20 to 65	50 to 160
Motor***	Rated output (kW) / Rated current (A)**							
	0.2 / 1.8					■		
	0.4 / 2.8	■			■	■		
	0.75 / 4.2	■		■	■			
	1.5 / 7.3	■		■				
	2.2 / 10		■	■				
	3.7 / 16.1		■					
	5.5 / 24		■				■	
	7.5 / 32						■	
	11 / 45						■	
	15 / 61						■	■
	18.5 / 74							■
	22 / 87							■
	30 / 117							■
	37 / 143.0							■

* The squares (□) represent the symbols defined under *Model Number Legend*.

** The rated current is the current at full load.

*** Supply: Low-voltage 3-phase basket type inductive motor, full-load characteristics of 200 VAC, 4-pole, totally-enclosed.

Note: When using a large-capacity or high-voltage motor whose capacity is 45 kW or more, calculate the rated current/alternating current ratio by converting with the alternating current ratio of the external current transformer.

Testing Method

■ Current Reverse-phase Detection Models

The operating characteristics listed in the table below are tested using the circuit shown on the right. Decide the number of conductor passes through the holes of the current transformer in accordance with the operating current range of the Motor Protective Relay and by referring to the current setting method described under *Operation, Setting, and Indication*.

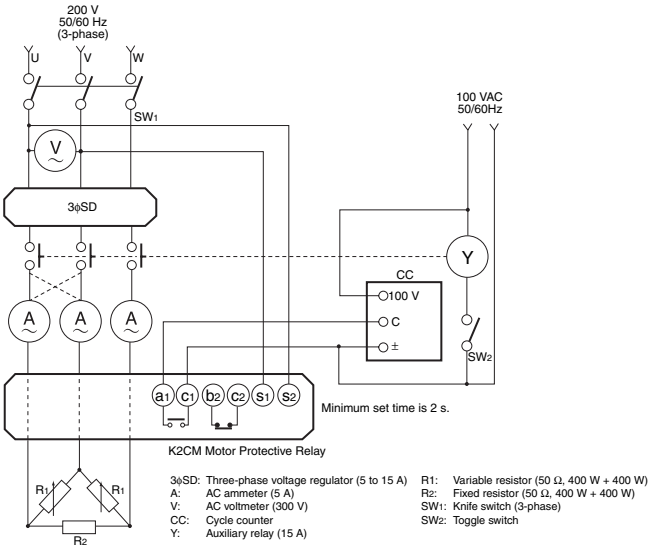

Test item		Test procedure	
		Operating value	**Operating time**
Over-current	**Inverse type**	**1.** Turn ON SW1. **2.** Turn ON SW2 to operate auxiliary relay Y. **3.** Gradually increase the current by adjusting the voltage regulator. With inverse-type models, read the value of the current when the overcurrent LED indicator blinks. With instantaneous-type models, read the value when it lights (continuously).* **4.** Turn OFF SW1 and SW2.	**1.** Turn ON SW1 and SW2. Increase the current to 600% of the set current value by adjusting the voltage regulator. Turn OFF SW1 and SW2.** **2.** Turn ON SW1. **3.** Turn ON SW2 and read the position (i.e., time) of the pointer of cycle counter CC when CC is stopped by the operation of the K2CM. The read time is the operating time for inverse-type models and the lock time of the instantaneous-type models. **4.** Turn OFF SW1 and SW2.
	Instantaneous type		**1.** Turn ON SW1 and SW2. Increase the current to 100% of the set current value by adjusting the voltage regulator. Turn OFF SW1 and SW2. **2.** Turn ON SW1 and SW2 again and wait 2 seconds minimum. **3.** Using the voltage regulator, abruptly increase the current to 140% of the set current value. Confirm that the K2CM performs instantaneous operation. **4.** Turn OFF SW1 and SW2.
Open-phase		**1.** Open (disconnect) any one of the input phases for the current transformer. **2.** Turn ON SW1 and SW2. Gradually increase the current by adjusting the voltage regulator. **3.** Confirm that the K2CM operates at a current no greater than 85% of the set current value and that, at this current, the trip indicator is orange and the open-phase LED indicator lights. **4.** Turn OFF SW1 and SW2.	**1.** Open (disconnect) any one of the input phases for the current transformer. **2.** Turn ON SW1 and SW2. Increase the currents of the other two phases to 115% of the set current value by adjusting the voltage regulator. Turn OFF SW1 and SW2 temporarily. **3.** Turn ON SW1 and SW2 again. Read the position (i.e., time) of the pointer of cycle counter CC when CC is stopped by the operation of the K2CM. **4.** Turn OFF SW1 and SW2.
Reverse-phase		**1.** Interchange any two phases at a position closer to the power supply than the current transformer. (In the above figure, phases U and V are interchanged as shown by the dotted lines.) **2.** Turn ON SW1 and SW2. Decrease the current to 50% of the set current value by adjusting the voltage regulator. Then turn OFF SW1 and SW2 temporarily. **3.** Turn ON SW1 and SW2 again. Confirm that the K2CM operates, the trip indicator is orange, and that the reverse-phase LED lights. **4.** Turn OFF SW1 and SW2.	**1.** Interchange any two phases at a position closer to the power supply than the current transformer. (In the above figure, phases U and V are exchanged as shown by the dotted lines.) **2.** Turn ON SW1 and SW2. Increase the current to 100% of the set current value by adjusting the voltage regulator. Then turn OFF SW1 and SW2 temporarily. **3.** Turn ON SW1 and SW2 again. Read the position (i.e., time) of the pointer of cycle counter CC when CC is stopped by the operation of the K2CM. **4.** Turn OFF SW1 and SW2.

* Balance the currents between phases by adjusting variable resistor R1.

** If a current equal to 600% of the set current value cannot be attained by adjusting the voltage regulator, increase the number of conductor passes through the holes of the current transformer.

■ Voltage Reverse-phase Detection Models

The operating characteristics listed in the table below are tested using the circuit shown on the right. Decide the number of conductor passes through the holes of the current transformer in accordance with the operating current range of the Motor Protective Relay and by referring to the current setting method described under *Operation, Setting, and Indication*.

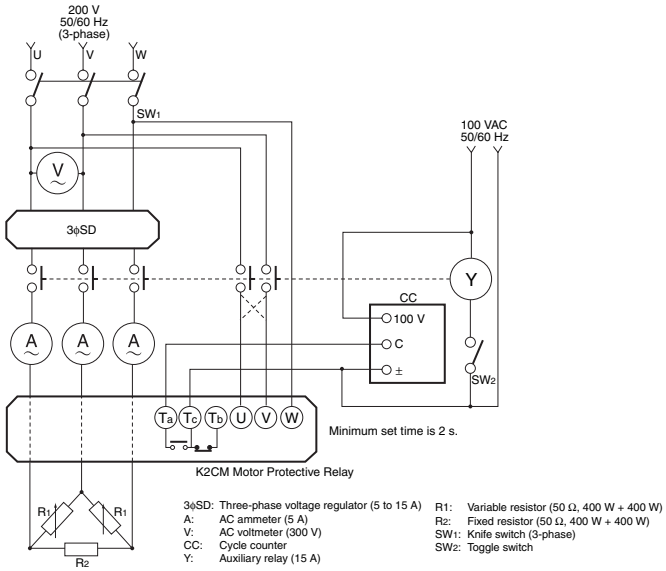

Test item		Test procedure	
		Operating value	**Operating time**
Over-current	**Inverse type**	**1.** Turn ON SW1. **2.** Turn ON SW2 to operate auxiliary relay Y. **3.** Gradually increase the current by adjusting the voltage regulator. With inverse-type models, read the value of the current when the overcurrent LED indicator blinks. With instantaneous-type models, read the value when it lights (continuously).* **4.** Turn OFF SW1 and SW2.	**1.** Turn ON SW1 and SW2. Increase the current by adjusting the voltage regulator to 600% of the set current value. Turn OFF SW1 and SW2.** **2.** Turn ON SW1. **3.** Turn ON SW2 and read the position (i.e., time) of the pointer of cycle counter CC when CC is stopped by the operation of the K2CM. The read time is the operating time for inverse-type models and the lock time of the instantaneous-type models. **4.** Turn OFF the SW1 and SW2.
	Instantaneous type		**1.** Turn ON SW1 and SW2. Increase the current to 100% of the set current value by adjusting the voltage regulator. Then turn OFF SW1 and SW2. **2.** Turn ON SW1 and SW2 again and wait 2 seconds minimum. **3.** Using the voltage regulator, abruptly increase the current to 140% of the set current value. Confirm that the K2CM performs the instantaneous operation. **4.** Turn OFF SW1 and SW2.
Open-phase		**1.** Open (disconnect) any one of the input phases for the current transformer. **2.** Turn ON SW1 and SW2. Gradually increase the current by adjusting the voltage regulator. **3.** Confirm that the K2CM operates at a current no greater than 85% of the set current value and that, at this current, the trip indicator is orange and the open-phase LED indicator lights. **4.** Turn OFF SW1 and SW2.	**1.** Open (disconnect) any one of the input phases for the current transformer. **2.** Turn ON SW1 and SW2. Increase the currents of the other two phases to 115% of the set current value by adjusting the voltage regulator. Turn OFF SW1 and SW2 temporarily. **3.** Turn ON SW1 and SW2 again. Read the position (i.e., time) of the pointer of cycle counter CC when CC is stopped by the operation of the K2CM. **4.** Turn OFF SW1 and SW2.
Reverse-phase		**1.** Change the phase sequence to reverse-phase by switching the U and W input terminals of the K2CM as shown by the dotted lines. **2.** Turn ON SW1 and SW2 and confirm that the K2CM operates. **3.** Add a three-phase voltage regulator to the U, V, and W terminal inputs. **4.** Adjust the voltage regulator and confirm that the K2CM operates at less than 80% of the rated supply voltage.	**1.** Put the voltage input in the reverse-phase state. **2.** Turn ON SW1 and SW2 and read the position of the pointer of cycle counter CC when CC is stopped. **3.** Turn OFF SW2.

* Balance the currents between phases by adjusting variable resistor R1.

** If a current equal to 600% of the set current value cannot be attained by adjusting the voltage regulator, increase the number of conductor passes through the holes of the current transformer.

Safety Precautions

■ Correct Use

- The operation check using the test button is intended to check the operation of the overcurrent functions. Therefore, be sure to turn ON the overcurrent switch. Also, at this time, turn OFF the open-phase switch and reverse-phase switch to prevent unnecessary operations from being performed.
- The operating time of inverse-type models and the lock time of the instantaneous-type models depend upon the set operating time. Therefore, do not hold down the test button for more than the set operating time.
- The reverse-phase can be detected in the wiring up to the current transformer (including an external current transformer). Check the wiring between the current transformer and the motor before starting the motor.
- Current reverse-phase detection models cannot be used in applications that do not allow even momentary reversals of motor direction.
- Jogging of the motor can be performed. For details, consult your OMRON representative.
- When using the K2CM to control inching shorter than 0.5 s, the reverse-phase level detection circuit may operate. In this case, be sure to use the K2CM with the reverse-phase switch set to OFF.
- The K2CM is basically intended to protect three-phase loads. Its overcurrent function, however, can also be applied to single-phase loads. In this case, the conductors can be passed through the holes in any direction and sequence.
- When applying the K2CM to a circuit with a high imbalance factor due to the nature of the power supply or load, actually measure the imbalance factor and select the open-phase sensitivity accordingly (i.e., set the open-phase switch to either the high or low position). The K2CM cannot be used if the imbalance factor is 60% or higher.
- When applying the K2CM to the protection of three-phase transformers, give consideration to the imbalance factor due to single-phase loads.
- A power supply with a frequency other than commercial frequency cannot be used as the control power supply.
- Use of circuits containing a high percentage of harmonics, such as circuits incorporating SCR control circuits, VVVF inverters, or rectifiers, may cause errors and malfunctions. Consult your OMRON representative for details.
- When applying the K2CM to the protection of a high-voltage motor or low-voltage, high-capacity motor, use an external rectifier that does not saturate at currents up to 600% of the rated motor current and thus permits a large overcurrent; otherwise, the K2CM will output a tripping signal because of imbalanced operation when an overcurrent occurs and, with reverse-type models, the motor may be damaged by burning.
- Never tamper with the trip indicator. Use the reset switch to reset the K2CM.
- When a power failure occurs in the control power supply, the K2CM is not reset even when the reset switch is pressed. This is not an error. The K2CM can be reset only when control power is applied to it.
- Be sure to remount the front cover after detaching it for operating or setting the switches on the front panel.
- The rectifier and control circuits are combined by tightening the two screws on the right and left sides. Never loosen these screws.
- The variable resistors used to make settings are equipped with mechanisms to stop them rotating outside the valid scale range. Do not rotate the variable resistors at a torque of 1 kg·cm or more.
- When using the K2CM-□□□A (instantaneous, automatic resetting), be sure to apply power to the Motor Protective Relay from the same power line as the magnet contactor for switching the motor.
- Be sure to provide the control power supply for the K2CM-□□□□V (voltage reverse-phase detection) from the same line as the motor.
- If current reverse-phase detection models are used in a circuit with distorted current waveforms, the reverse-phase element may perform an unwanted operation. In such circuits, use of the K2CM-□□□□V (voltage reverse-phase detection) is recommended because it is not affected at all by current waveform distortion.

Combination	Function setting switches			LED indicators			NOTE
	Overcurrent	Open-phase	Reverse-phase	Overcurrent	Open-phase	Reverse-phase	
1	ON			ON			If the inputs for combinations of two or more functions are simultaneously generated, the K2CM detects the inputs in the order reverse-phase, open-phase, overcurrent. Take combination 4 as an example. If the open-phase and overcurrent occur at the same time, there is insufficient time to detect the overcurrent because the open-phase is first detected and the K2CM outputs the tripping signal (causing the magnet contactor to turn off). Therefore, the overcurrent indicator does not light.
2		ON			ON		
3			ON	OFF		ON	
4	ON	ON			ON		
5		ON	ON		OFF	ON	
6	ON		ON	OFF		ON	
7	ON	ON	ON	OFF	OFF	ON	

■ Maintenance and Inspection

The K2CM Motor Protective Relay offers very stable characteristics. To maintain these characteristics for a long time, the following inspections are recommended.

Daily Inspection

The purpose of daily inspection is to discover causes of failure before using the Motor Protective Relay. This inspection depends somewhat on the perception of the operator as it includes visual checking, etc.

Classification	Inspection items
Connections	Loosening, damage, and dust collection at screw terminals, damage to wiring insulation sheaths, excessive force applied on wirings, adhesion of foreign objects to terminal screws
Motor Protective Relay	Adhesion of foreign objects and dust to the operation panel, shift of set value, indication status of operation indicators and trip indicator, presence/absence of front cover, loosening of screws combining rectifier and control circuits, deformation of case, abnormal temperature on housing surface
External rectifier	Loosing of terminals, unusual odor, discoloration of surface

Periodic Inspection

This inspection is performed by turning OFF the power at regular intervals to check the aging caused by long-time operation. It is recommended that periodic inspection is performed once a year.

Motor Protective Relay

Classification	Inspection item
Construction	Adhesion of dust and foreign objects to terminals, cracks in insulators around terminal block, burn damage to wirings, damage to setting knobs, selector switches, test button, and reset button, damage to insulators of solderless terminals, rust and discoloration of screw terminals
Operating characteristics	Refer to *Testing Method*.
Insulation resistance	Between terminals and mounting panel
Operation check with test button	Checking of operating time, operation indicators, and trip indicator

External Rectifier

Check for adhesion of dust and foreign objects, damage to wirings by burning, and loosening of mounting screws.

Q & A

Q **What is the VA consumption of the CT section?**

A The consumption is 0.4 VA/phase max. for any CT section.

Q **What action is required if an inverter circuit is used?**

A As shown in the following figure, insert the K2CM and turn OFF the reverse-phase switch before using the K2CM.

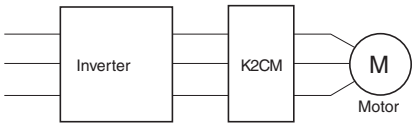

- Always insert the K2CM on the secondary side (load side) of the inverter.

Mounting location / Element	Inverter power supply	Inverter load
Overcurrent	NG	Conditionally OK
Open-phase	NG	Conditionally OK
Reverse-phase	NG	NG

- Error may occur in the operating values depending on the inverter specifications and settings. Set the values after performing tests and confirming operation.
- The current waveform on the inverter power supply side is distorted, so the K2CM may malfunction.
- The inverter load side contains a large high-frequency component, so the K2CM may malfunction due to phase reversal.
- Depending on the specifications and settings of the inverter, overloads and open phases may also cause the K2CM to malfunction.
- Using a K2MR is recommended to protect the inverter motor.

Q **What action is required if single phase is used?**

A The following describes the operating procedure for using a single phase with the K2CM.

- Connection Method
  Pass wires through any two of the three holes on the K2CM.

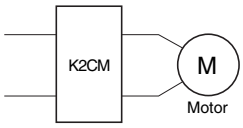

- If a single phase is used, set the open-phase and reverse-phase switch to OFF. Make the overload settings so that they match the motor current.
- Do not apply control power supply voltage between the V-W terminals if a model with voltage reverse-phase detection is used.

ALL DIMENSIONS SHOWN ARE IN MILLIMETERS.
To convert millimeters into inches, multiply by 0.03937. To convert grams into ounces, multiply by 0.03527.

In the interest of product improvement, specifications are subject to change without notice.

Read and Understand This Catalog

Please read and understand this catalog before purchasing the products. Please consult your OMRON representative if you have any questions or comments.

Warranty and Limitations of Liability

WARRANTY

OMRON's exclusive warranty is that the products are free from defects in materials and workmanship for a period of one year (or other period if specified) from date of sale by OMRON.

OMRON MAKES NO WARRANTY OR REPRESENTATION, EXPRESS OR IMPLIED, REGARDING NON-INFRINGEMENT, MERCHANTABILITY, OR FITNESS FOR PARTICULAR PURPOSE OF THE PRODUCTS. ANY BUYER OR USER ACKNOWLEDGES THAT THE BUYER OR USER ALONE HAS DETERMINED THAT THE PRODUCTS WILL SUITABLY MEET THE REQUIREMENTS OF THEIR INTENDED USE. OMRON DISCLAIMS ALL OTHER WARRANTIES, EXPRESS OR IMPLIED.

LIMITATIONS OF LIABILITY

OMRON SHALL NOT BE RESPONSIBLE FOR SPECIAL, INDIRECT, OR CONSEQUENTIAL DAMAGES, LOSS OF PROFITS OR COMMERCIAL LOSS IN ANY WAY CONNECTED WITH THE PRODUCTS, WHETHER SUCH CLAIM IS BASED ON CONTRACT, WARRANTY, NEGLIGENCE, OR STRICT LIABILITY.

In no event shall the responsibility of OMRON for any act exceed the individual price of the product on which liability is asserted.

IN NO EVENT SHALL OMRON BE RESPONSIBLE FOR WARRANTY, REPAIR, OR OTHER CLAIMS REGARDING THE PRODUCTS UNLESS OMRON'S ANALYSIS CONFIRMS THAT THE PRODUCTS WERE PROPERLY HANDLED, STORED, INSTALLED, AND MAINTAINED AND NOT SUBJECT TO CONTAMINATION, ABUSE, MISUSE, OR INAPPROPRIATE MODIFICATION OR REPAIR.

Application Considerations

SUITABILITY FOR USE

OMRON shall not be responsible for conformity with any standards, codes, or regulations that apply to the combination of products in the customer's application or use of the products.

At the customer's request, OMRON will provide applicable third party certification documents identifying ratings and limitations of use that apply to the products. This information by itself is not sufficient for a complete determination of the suitability of the products in combination with the end product, machine, system, or other application or use.

The following are some examples of applications for which particular attention must be given. This is not intended to be an exhaustive list of all possible uses of the products, nor is it intended to imply that the uses listed may be suitable for the products:

- Outdoor use, uses involving potential chemical contamination or electrical interference, or conditions or uses not described in this catalog.
- Nuclear energy control systems, combustion systems, railroad systems, aviation systems, medical equipment, amusement machines, vehicles, safety equipment, and installations subject to separate industry or government regulations.
- Systems, machines, and equipment that could present a risk to life or property.

Please know and observe all prohibitions of use applicable to the products.

NEVER USE THE PRODUCTS FOR AN APPLICATION INVOLVING SERIOUS RISK TO LIFE OR PROPERTY WITHOUT ENSURING THAT THE SYSTEM AS A WHOLE HAS BEEN DESIGNED TO ADDRESS THE RISKS, AND THAT THE OMRON PRODUCTS ARE PROPERLY RATED AND INSTALLED FOR THE INTENDED USE WITHIN THE OVERALL EQUIPMENT OR SYSTEM.

PROGRAMMABLE PRODUCTS

OMRON shall not be responsible for the user's programming of a programmable product, or any consequence thereof.

Disclaimers

CHANGE IN SPECIFICATIONS

Product specifications and accessories may be changed at any time based on improvements and other reasons.

It is our practice to change model numbers when published ratings or features are changed, or when significant construction changes are made. However, some specifications of the products may be changed without any notice. When in doubt, special model numbers may be assigned to fix or establish key specifications for your application on your request. Please consult with your OMRON representative at any time to confirm actual specifications of purchased products.

DIMENSIONS AND WEIGHTS

Dimensions and weights are nominal and are not to be used for manufacturing purposes, even when tolerances are shown.

PERFORMANCE DATA

Performance data given in this catalog is provided as a guide for the user in determining suitability and does not constitute a warranty. It may represent the result of OMRON's test conditions, and the users must correlate it to actual application requirements. Actual performance is subject to the OMRON Warranty and Limitations of Liability.

ERRORS AND OMISSIONS

The information in this document has been carefully checked and is believed to be accurate; however, no responsibility is assumed for clerical, typographical, or proofreading errors, or omissions.

2011.12

In the interest of product improvement, specifications are subject to change without notice.

OMRON Corporation
Industrial Automation Company

http://www.ia.omron.com/

(c)Copyright OMRON Corporation 2011 All Right Reserved.

Компания «ЭлектроПласт» предлагает заключение долгосрочных отношений при поставках импортных электронных компонентов на взаимовыгодных условиях!

Наши преимущества:

- Оперативные поставки широкого спектра электронных компонентов отечественного и импортного производства напрямую от производителей и с крупнейших мировых складов;
- Поставка более 17-ти миллионов наименований электронных компонентов;
- Поставка сложных, дефицитных, либо снятых с производства позиций;
- Оперативные сроки поставки под заказ (от 5 рабочих дней);
- Экспресс доставка в любую точку России;
- Техническая поддержка проекта, помощь в подборе аналогов, поставка прототипов;
- Система менеджмента качества сертифицирована по Международному стандарту ISO 9001;
- Лицензия ФСБ на осуществление работ с использованием сведений, составляющих государственную тайну;
- Поставка специализированных компонентов (Xilinx, Altera, Analog Devices, Intersil, Interpoint, Microsemi, Aeroflex, Peregrine, Syfer, Eurofarad, Texas Instrument, Miteq, Cobham, E2V, MA-COM, Hittite, Mini-Circuits,General Dynamics и др.);

Помимо этого, одним из направлений компании «ЭлектроПласт» является направление «Источники питания». Мы предлагаем Вам помощь Конструкторского отдела:

- Подбор оптимального решения, техническое обоснование при выборе компонента;
- Подбор аналогов;
- Консультации по применению компонента;
- Поставка образцов и прототипов;
- Техническая поддержка проекта;
- Защита от снятия компонента с производства.

Как с нами связаться

Телефон: 8 (812) 309 58 32 (многоканальный)
Факс: 8 (812) 320-02-42
Электронная почта: org@eplast1.ru
Адрес: 198099, г. Санкт-Петербург, ул. Калинина, дом 2, корпус 4, литера А.