NEW!

Chip Inductors – 0805HP (2012)

RoHS/ REACH COMPLIANT

Halogen Free

- Exceptional Q values, even at high frequencies
- Tight tolerances – 2% for most
- Wirewound construction for highest possible self resonance – up to 9.5 GHz

Part number[1]	Inductance[2] (nH)	Percent tolerance[3]	Q typ[4]	SRF typ[5] (MHz)	DCR max[6] (Ohms)	Irms[7] (A)
0805HP-2N6XJR_	2.6 @ 250 MHz	**5**	100 @ 1500 MHz	9500	0.015	2.0
0805HP-6N2XJR_	6.2 @ 250 MHz	**5**	104 @ 1000 MHz	7200	0.027	1.5
0805HP-6N8XJR_	6.8 @ 250 MHz	**5**	90 @ 1000 MHz	6000	0.066	1.3
0805HP-11NX_R_	11 @ 250 MHz	**5,2**	93 @ 500 MHz	4750	0.039	1.6
0805HP-12NX_R_	12 @ 250 MHz	**5,2**	91 @ 500 MHz	4425	0.039	1.4
0805HP-13NX_R_	13 @ 250 MHz	**5,2**	91 @ 500 MHz	4100	0.039	1.4
0805HP-18NX_R_	18 @ 250 MHz	**5,2**	95 @ 500 MHz	3650	0.050	1.2
0805HP-33NX_R_	33 @ 250 MHz	**5,2**	100 @ 500 MHz	2410	0.087	1.1
0805HP-47NX_R_	47 @ 200 MHz	**5,2**	105 @ 500 MHz	2170	0.093	1.0
0805HP-56NX_R_	56 @ 200 MHz	**5,2**	100 @ 500 MHz	1815	0.122	0.95
0805HP-82NX_R_	82 @ 150 MHz	**5,2**	103 @ 500 MHz	1525	0.168	0.82
0805HP-101X_R_	100 @ 150 MHz	**5,2**	100 @ 500 MHz	1400	0.220	0.72
0805HP-121X_R_	120 @ 150 MHz	**5,2**	80 @ 250 MHz	1265	0.293	0.62
0805HP-151X_R_	150 @ 100 MHz	**5,2**	80 @ 250 MHz	1150	0.288	0.60
0805HP-181X_R_	180 @ 100 MHz	**5,2**	77 @ 250 MHz	1025	0.374	0.54
0805HP-221X_R_	220 @ 100 MHz	**5,2**	75 @ 250 MHz	930	0.426	0.50
0805HP-271X_R_	270 @ 100 MHz	**5,2**	75 @ 100 MHz	830	0.754	0.42
0805HP-331X_R_	330 @ 100 MHz	**5,2**	54 @ 100 MHz	770	1.004	0.36
0805HP-391X_R_	390 @ 100 MHz	**5,2**	52 @ 100 MHz	700	1.110	0.33
0805HP-471X_R_	470 @ 50 MHz	**5,2**	52 @ 100 MHz	640	1.559	0.28
0805HP-561X_R_	560 @ 25 MHz	**5,2**	46 @ 100 MHz	550	2.067	0.24
0805HP-681X_R_	680 @ 25 MHz	**5,2**	46 @ 100 MHz	535	2.355	0.21
0805HP-821X_R_	820 @ 25 MHz	**5,2**	50 @ 100 MHz	485	3.945	0.18

1. When ordering, specify **tolerance, termination** and **packaging** codes:

   0805HP-821XJRC

   Tolerance: **G** = 2% **J** = 5%

   Termination: **R** = RoHS compliant matte tin over nickel over silver-glass frit

   Special order: **Q** = RoHS tin-silver-copper (95.5/4/0.5) over tin or **P** = non-RoHS tin-lead (63/37) over tin.

   Packaging: **C** = 7″ machine-ready reel. EIA-481 embossed plastic tape (2000 parts per full reel). Quantities less than full reel available: in tape (not machine ready) or with leader and trailer ($25 charge).

   D = 13″ machine-ready reel. EIA-481 embossed plastic tape. Factory order only, not stocked (7500 parts per full reel).

   B = Less than full reel. In an effort to simplify our part numbering system, Coilcraft is eliminating the need for multiple packaging codes. When ordering, simply change the last letter of your part number from B to C.
2. Inductance measured using a Coilcraft SMD-A fixture in an Agilent/ HP 4286A impedance analyzer with Coilcraft-provided correlation pieces.
3. Tolerances in bold are stocked for immediate shipment.
4. Q measured using an Agilent/HP 4291A with an Agilent/HP 16193 test fixture.
5. SRF measured using an Agilent/HP 8720D network analyzer and a Coilcraft SMD-D test fixture.
6. DCR measured on a Cambridge Technology micro-ohmmeter and a Coilcraft CCF858 test fixture.
7. Current that causes a 15°C temperature rise from 25°C ambient. This information is for reference only and does not represent absolute maximum ratings.
8. Electrical specifications at 25°C.

Refer to Doc 362 “Soldering Surface Mount Components” before soldering.

Core material Ceramic

Environmental RoHS compliant, halogen free

Terminations RoHS compliant matte tin over nickel over silver-glass frit. Other terminations available at additional cost.

Weight 9.5 – 12.5 mg

Ambient temperature –40°C to +125°C with Irms current

Maximum part temperature +140°C (ambient + temp rise).

Storage temperature Component: –40°C to +140°C. Tape and reel packaging: –40°C to +80°C

Resistance to soldering heat Max three 40 second reflows at +260°C, parts cooled to room temperature between cycles

Temperature Coefficient of Inductance (TCL) +100 to +250 ppm/°C

Moisture Sensitivity Level (MSL) 1 (unlimited floor life at <30°C / 85% relative humidity)

Failures in Time (FIT) / Mean Time Between Failures (MTBF) One per billion hours / one billion hours, calculated per Telcordia SR-332

Packaging 2000/7″ reel; 7500/13″ reel. Plastic tape: 8 mm wide, 0.23 mm thick, 4 mm pocket spacing, 1.65 mm pocket depth

PCB washing Tested to MIL-STD-202 Method 215 plus an additional aqueous wash. See Doc787_PCB_Washing.pdf.

Coilcraft®
www.coilcraft.com

US +1-847-639-6400 sales@coilcraft.com
UK +44-1236-730595 sales@coilcraft-europe.com
Taiwan +886-2-2264 3646 sales@coilcraft.com.tw
China +86-21-6218 8074 sales@coilcraft.com.cn
Singapore + 65-6484 8412 sales@coilcraft.com.sg

© Coilcraft Inc. 2020
This product may not be used in medical or high risk applications without prior Coilcraft approval. Specification subject to change without notice. Please check web site for latest information.

NEW!

RoHS/ REACH COMPLIANT

Halogen Free

0805HP Series (2012)

Typical Q vs Frequency

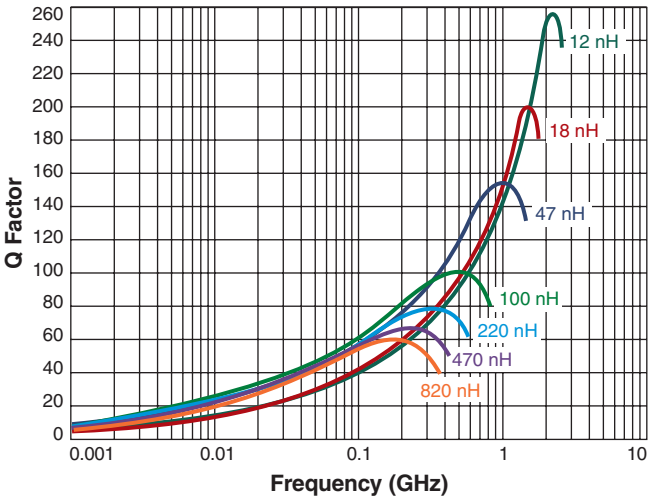

Typical L vs Frequency

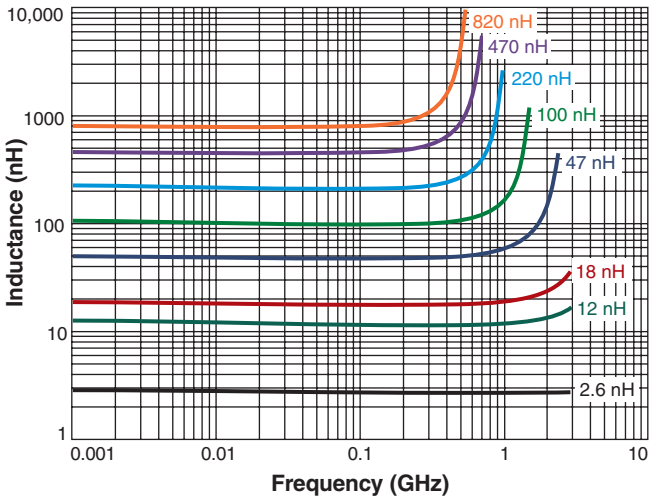

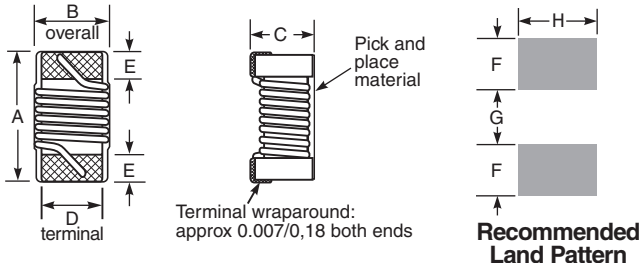

A max	B max	C max	D ref	E	F	G	H	
0.087	0.068	0.061	0.061	0.012	0.040	0.044	0.078	inches
2,21	1,73	1,55	1,55	0,30	1,02	1,12	1,98	mm

Note: Height dimension (C) is before optional solder application. For maximum height dimension including solder, add 0.006 in / 0,152 mm.

US +1-847-639-6400 sales@coilcraft.com
UK +44-1236-730595 sales@coilcraft-europe.com
Taiwan +886-2-2264 3646 sales@coilcraft.com.tw
China +86-21-6218 8074 sales@coilcraft.com.cn
Singapore + 65-6484 8412 sales@coilcraft.com.sg

© Coilcraft Inc. 2020
This product may not be used in medical or high risk applications without prior Coilcraft approval. Specification subject to change without notice. Please check web site for latest information.

Компания «ЭлектроПласт» предлагает заключение долгосрочных отношений при поставках импортных электронных компонентов на взаимовыгодных условиях!

Наши преимущества:

- Оперативные поставки широкого спектра электронных компонентов отечественного и импортного производства напрямую от производителей и с крупнейших мировых складов;
- Поставка более 17-ти миллионов наименований электронных компонентов;
- Поставка сложных, дефицитных, либо снятых с производства позиций;
- Оперативные сроки поставки под заказ (от 5 рабочих дней);
- Экспресс доставка в любую точку России;
- Техническая поддержка проекта, помощь в подборе аналогов, поставка прототипов;
- Система менеджмента качества сертифицирована по Международному стандарту ISO 9001;
- Лицензия ФСБ на осуществление работ с использованием сведений, составляющих государственную тайну;
- Поставка специализированных компонентов (Xilinx, Altera, Analog Devices, Intersil, Interpoint, Microsemi, Aeroflex, Peregrine, Syfer, Eurofarad, Texas Instrument, Miteq, Cobham, E2V, MA-COM, Hittite, Mini-Circuits,General Dynamics и др.);

Помимо этого, одним из направлений компании «ЭлектроПласт» является направление «Источники питания». Мы предлагаем Вам помощь Конструкторского отдела:

- Подбор оптимального решения, техническое обоснование при выборе компонента;
- Подбор аналогов;
- Консультации по применению компонента;
- Поставка образцов и прототипов;
- Техническая поддержка проекта;
- Защита от снятия компонента с производства.

Как с нами связаться

Телефон: 8 (812) 309 58 32 (многоканальный)
Факс: 8 (812) 320-02-42
Электронная почта: org@eplast1.ru
Адрес: 198099, г. Санкт-Петербург, ул. Калинина, дом 2, корпус 4, литера А.