CompactPower™

The Compact Power Transformer

Series: PSL & PDL - Chassis Mount with Lead Wires

- **Power Rating 1.2VA to 100VA**
- **Single or Dual Primary, 115V or 115/230V**
- **Frequency 50/60HZ**
- **Center-tapped Secondary**
- **Dielectric Strength – 2500 Vrms**
- **Insulation Class B (130°C)**
- **Low Capacitive Coupling, no Electrostatic Shield Needed**
- **Color Coded Hook-up Wires**

Agency Approvals:

- **UL/cUL 5085-2 Recognized (File E47299)**
- **Insulation File No. E95662**

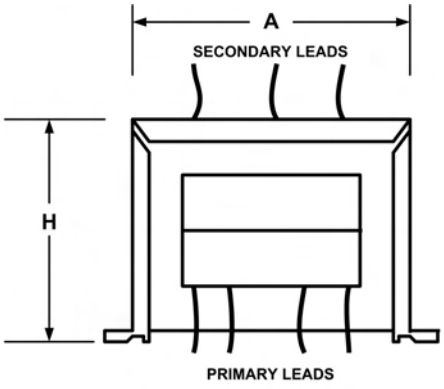

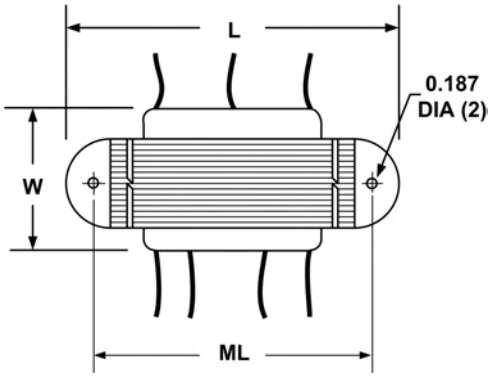

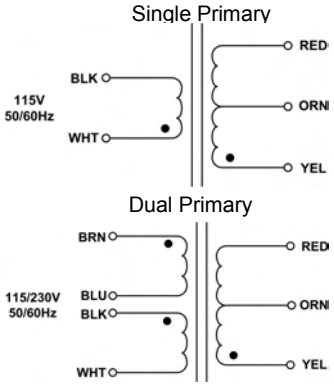

● Indicates Like Polarity

Primaries and Secondaries are designed to be used simultaneously. That is, they must be used either series or parallel connected (as one winding). Same applies to secondaries also.

VA Rating	Dimensions (Inches)					Weight Lbs
	L	W	H	A	ML	
1.2	2.063	1.00	1.19	1.45	1.75	0.25
2.4	2.063	1.40	1.19	1.45	1.75	0.25
5	2.375	1.50	1.38	1.70	2.00	0.44
6	2.375	1.50	1.38	1.70	2.00	0.44
10	2.813	1.64	1.62	1.95	2.38	0.70
12	2.813	1.64	1.62	1.95	2.38	0.70
15	2.813	1.64	1.62	1.95	2.38	0.70
20	3.250	1.60	1.94	2.32	2.81	1.10
30	3.250	2.00	1.94	2.32	2.81	1.10
40	3.688	1.95	2.25	2.70	3.12	1.70
50	3.688	2.13	2.25	2.70	3.12	1.70
56	3.688	2.13	2.25	2.70	3.12	1.70
75	4.031	2.25	2.56	3.08	3.56	2.75
80	4.031	2.25	2.56	3.08	3.56	2.75
100	4.031	2.50	2.56	3.08	3.56	2.75

Any application, Any requirement, Contact us for our Custom Designs

Series: PSL & PDL - Chassis Mount with Lead Wires

Partial Selection Guide

VA	Part Number		Secondary
	115V	115/230V	
1.2	PSL-012-10	PDL-012-10	10VCT @ 120mA
	PSL-012-126	PDL-012-126	12.6VCT @ 95mA
	PSL-012-16	PDL-012-16	16VCT @ 75mA
	PSL-012-20	PDL-012-20	20VCT @ 60mA
	PSL-012-24	PDL-012-24	24VCT @ 50mA
	PSL-012-28	PDL-012-28	28VCT @ 43mA
	PSL-012-36	PDL-012-36	36VCT @ 33mA
	PSL-012-48	PDL-012-48	48VCT @ 25mA
	PSL-012-56	PDL-012-56	56VCT @ 21mA
	PSL-012-120	PDL-012-120	120VCT @ 10mA
2.4	PSL-24-10	PDL-24-10	10VCT @ 240mA
	PSL-24-126	PDL-24-126	12.6VCT @ 190mA
	PSL-24-16	PDL-24-16	16VCT @ 150mA
	PSL-24-20	PDL-24-20	20VCT @ 120mA
	PSL-24-24	PDL-24-24	24VCT @ 100mA
	PSL-24-28	PDL-24-28	28VCT @ 85mA
	PSL-24-36	PDL-24-36	36VCT @ 66mA
	PSL-24-48	PDL-24-48	48VCT @ 50mA
	PSL-24-56	PDL-24-56	56VCT @ 43mA
	PSL-24-120	PDL-24-120	120VCT @ 20mA
5	PSL-05-10	PDL-05-10	10VCT @ 500mA
	PSL-05-126	PDL-05-126	12.6VCT @ 397mA
	PSL-05-16	PDL-05-16	16VCT @ 312mA
	PSL-05-20	PDL-05-20	20VCT @ 250mA
	PSL-05-24	PDL-05-24	24VCT @ 208mA
	PSL-05-28	PDL-05-28	28VCT @ 178mA
	PSL-05-36	PDL-05-36	36VCT @ 138mA
	PSL-05-48	PDL-05-48	48VCT @ 104mA
	PSL-05-56	PDL-05-56	56VCT @ 89mA
	PSL-05-120	PDL-05-120	120VCT @ 42mA
6	PSL-06-10	PDL-06-10	10VCT @ 600mA
	PSL-06-126	PDL-06-126	12.6VCT @ 476mA
	PSL-06-16	PDL-06-16	16VCT @ 375mA
	PSL-06-20	PDL-06-20	20VCT @ 300mA
	PSL-06-24	PDL-06-24	24VCT @ 250mA
	PSL-06-28	PDL-06-28	28VCT @ 214mA
	PSL-06-36	PDL-06-36	36VCT @ 167mA
	PSL-06-48	PDL-06-48	48VCT @ 125mA
	PSL-06-56	PDL-06-56	56VCT @ 107mA
	PSL-06-120	PDL-06-120	120VCT @ 50mA

VA	Part Number		Secondary
	115V	115/230V	
10	PSL-10-10	PDL-10-10	10VCT @ 1.00A
	PSL-10-126	PDL-10-126	12.6VCT @ 794mA
	PSL-10-16	PDL-10-16	16VCT @ 625mA
	PSL-10-20	PDL-10-20	20VCT @ 500mA
	PSL-10-24	PDL-10-24	24VCT @ 417mA
	PSL-10-28	PDL-10-28	28VCT @ 357mA
	PSL-10-36	PDL-10-36	36VCT @ 278mA
	PSL-10-48	PDL-10-48	48VCT @ 208mA
	PSL-10-56	PDL-10-56	56VCT @ 180mA
	PSL-10-120	PDL-10-120	120VCT @ 83mA
12	PSL-12-10	PDL-12-10	10VCT @ 1.2A
	PSL-12-126	PDL-12-126	12.6VCT @ 950mA
	PSL-12-16	PDL-12-16	16VCT @ 750mA
	PSL-12-20	PDL-12-20	20VCT @ 600mA
	PSL-12-24	PDL-12-24	24VCT @ 500mA
	PSL-12-28	PDL-12-28	28VCT @ 428mA
	PSL-12-36	PDL-12-36	36VCT @ 330mA
	PSL-12-48	PDL-12-48	48VCT @ 250mA
	PSL-12-56	PDL-12-56	56VCT @ 214mA
	PSL-12-120	PDL-12-120	120VCT @ 100mA
15	PSL-15-10	PDL-15-10	10VCT @ 1.5A
	PSL-15-126	PDL-15-126	12.6VCT @ 1.19A
	PSL-15-16	PDL-15-16	16VCT @ 940mA
	PSL-15-20	PDL-15-20	20VCT @ 750mA
	PSL-15-24	PDL-15-24	24VCT @ 625mA
	PSL-15-28	PDL-15-28	28VCT @ 536mA
	PSL-15-36	PDL-15-36	36VCT @ 417mA
	PSL-15-48	PDL-15-48	48VCT @ 312mA
	PSL-15-56	PDL-15-56	56VCT @ 268mA
	PSL-15-120	PDL-15-120	120VCT @ 125mA
20	PSL-20-10	PDL-20-10	10VCT @ 2.0A
	PSL-20-126	PDL-20-126	12.6VCT @ 1.58A
	PSL-20-16	PDL-20-16	16VCT @ 1.25A
	PSL-20-20	PDL-20-20	20VCT @ 1.0A
	PSL-20-24	PDL-20-24	24VCT @ 834mA
	PSL-20-28	PDL-20-28	28VCT @ 714mA
	PSL-20-36	PDL-20-36	36VCT @ 555mA
	PSL-20-48	PDL-20-48	48VCT @ 417mA
	PSL-20-56	PDL-20-56	56VCT @ 357mA
	PSL-20-120	PDL-20-120	120VCT @ 167mA

Any application, Any requirement, Contact us for our Custom Designs

Series: PSL & PDL - Chassis Mount with Lead Wires

Partial Selection Guide (Continued)

VA	Part Number		Secondary
	115V	115/230V	
30	PSL-30-10	PDL-30-10	10VCT @ 3.0A
	PSL-30-12	PDL-30-12	12VCT @ 2.50A
	PSL-30-16	PDL-30-16	16VCT @ 1.875A
	PSL-30-20	PDL-30-20	20VCT @ 1.50A
	PSL-30-24	PDL-30-24	24VCT @ 1.25A
	PSL-30-28	PDL-30-28	28VCT @ 1.071A
	PSL-30-36	PDL-30-36	36VCT @ 833mA
	PSL-30-48	PDL-30-48	48VCT @ 625mA
	PSL-30-56	PDL-30-56	56VCT @ 536mA
	PSL-30-120	PDL-30-120	120VCT @ 250mA
40	PSL-40-10	PDL-40-10	10VCT @ 4.0A
	PSL-40-12	PDL-40-12	12VCT @ 3.33A
	PSL-40-16	PDL-40-16	16VCT @ 2.50A
	PSL-40-20	PDL-40-20	20VCT @ 2.0A
	PSL-40-24	PDL-40-24	24VCT @ 1.67A
	PSL-40-28	PDL-40-28	28VCT @ 1.43A
	PSL-40-36	PDL-40-36	36VCT @ 1.11A
	PSL-40-48	PDL-40-48	48VCT @ 834mA
	PSL-40-56	PDL-40-56	56VCT @ 714mA
	PSL-40-120	PDL-40-120	120VCT @ 334mA
50	PSL-50-10	PDL-50-10	10VCT @ 5.0A
	PSL-50-12	PDL-50-12	12VCT @ 4.17A
	PSL-50-16	PDL-50-16	16VCT @ 3.125A
	PSL-50-20	PDL-50-20	20VCT @ 2.5A
	PSL-50-24	PDL-50-24	24VCT @ 2.08A
	PSL-50-28	PDL-50-28	28VCT @ 1.78A
	PSL-50-36	PDL-50-36	36VCT @ 1.39A
	PSL-50-48	PDL-50-48	48VCT @ 1.042A
	PSL-50-56	PDL-50-56	56VCT @ 893mA
	PSL-50-120	PDL-50-120	120VCT @ 417mA
56	PSL-56-10	PDL-56-10	10VCT @ 5.6A
	PSL-56-12	PDL-56-12	12VCT @ 4.66A
	PSL-56-16	PDL-56-16	16VCT @ 3.15A
	PSL-56-20	PDL-56-20	20VCT @ 2.80A
	PSL-56-24	PDL-56-24	24VCT @ 2.33A
	PSL-56-28	PDL-56-28	28VCT @ 2.00A
	PSL-56-36	PDL-56-36	36VCT @ 1.56A
	PSL-56-48	PDL-56-48	48VCT @ 1.17A
	PSL-56-56	PDL-56-56	56VCT @ 1.0A
	PSL-56-120	PDL-56-120	120VCT @ 47mA

VA	Part Number		Secondary
	115V	115/230V	
75	PSL-75-10	PDL-75-10	10VCT @ 7.50A
	PSL-75-12	PDL-75-12	12VCT @ 6.25A
	PSL-75-16	PDL-75-16	16VCT @ 4.69A
	PSL-75-20	PDL-75-20	20VCT @ 3.75A
	PSL-75-24	PDL-75-24	24VCT @ 3.125A
	PSL-75-28	PDL-75-28	28VCT @ 2.68A
	PSL-75-36	PDL-75-36	36VCT @ 2.08A
	PSL-75-48	PDL-75-48	48VCT @ 1.56A
	PSL-75-56	PDL-75-56	56VCT @ 1.34A
	PSL-75-120	PDL-75-120	120VCT @ 625mA
80	PSL-80-10	PDL-80-10	10VCT @ 8.0A
	PSL-80-12	PDL-80-12	12VCT @ 6.66A
	PSL-80-16	PDL-80-16	16VCT @ 5.00A
	PSL-80-20	PDL-80-20	20VCT @ 4.00A
	PSL-80-24	PDL-80-24	24VCT @ 3.33A
	PSL-80-28	PDL-80-28	28VCT @ 2.86A
	PSL-80-36	PDL-80-36	36VCT @ 2.22A
	PSL-80-48	PDL-80-48	48VCT @ 1.67A
	PSL-80-56	PDL-80-56	56VCT @ 1.43A
	PSL-80-120	PDL-80-120	120VCT @ 67mA
100	PSL-100-10	PDL-100-10	10VCT @ 10A
	PSL-100-12	PDL-100-12	12VCT @ 8.33A
	PSL-100-16	PDL-100-16	16VCT @ 6.25A
	PSL-100-20	PDL-100-20	20VCT @ 5.0A
	PSL-100-24	PDL-100-24	24VCT @ 4.17A
	PSL-100-28	PDL-100-28	28VCT @ 3.57A
	PSL-100-36	PDL-100-36	36VCT @ 2.78A
	PSL-100-48	PDL-100-48	48VCT @ 2.08A
	PSL-100-56	PDL-100-56	56VCT @ 1.79A
	PSL-100-120	PDL-100-120	120VCT @ 833mA

Any application, Any requirement, Contact us for our Custom Designs

Компания «ЭлектроПласт» предлагает заключение долгосрочных отношений при поставках импортных электронных компонентов на взаимовыгодных условиях!

Наши преимущества:

- Оперативные поставки широкого спектра электронных компонентов отечественного и импортного производства напрямую от производителей и с крупнейших мировых складов;
- Поставка более 17-ти миллионов наименований электронных компонентов;
- Поставка сложных, дефицитных, либо снятых с производства позиций;
- Оперативные сроки поставки под заказ (от 5 рабочих дней);
- Экспресс доставка в любую точку России;
- Техническая поддержка проекта, помощь в подборе аналогов, поставка прототипов;
- Система менеджмента качества сертифицирована по Международному стандарту ISO 9001;
- Лицензия ФСБ на осуществление работ с использованием сведений, составляющих государственную тайну;
- Поставка специализированных компонентов (Xilinx, Altera, Analog Devices, Intersil, Interpoint, Microsemi, Aeroflex, Peregrine, Syfer, Eurofarad, Texas Instrument, Miteq, Cobham, E2V, MA-COM, Hittite, Mini-Circuits,General Dynamics и др.);

Помимо этого, одним из направлений компании «ЭлектроПласт» является направление «Источники питания». Мы предлагаем Вам помощь Конструкторского отдела:

- Подбор оптимального решения, техническое обоснование при выборе компонента;
- Подбор аналогов;
- Консультации по применению компонента;
- Поставка образцов и прототипов;
- Техническая поддержка проекта;
- Защита от снятия компонента с производства.

Как с нами связаться

Телефон: 8 (812) 309 58 32 (многоканальный)
Факс: 8 (812) 320-02-42
Электронная почта: org@eplast1.ru
Адрес: 198099, г. Санкт-Петербург, ул. Калинина, дом 2, корпус 4, литера А.