150W Single Output LED Power Supply

LPC-150 series

■ Features :

- Constant current design
- 180~305VAC input only
- High efficiency up to 90%
- Protections: Short circuit / Over voltage / Over temperature
- Cooling by free air convection
- Fully encapsulated with IP67 level (Note.6)
- Fully isolated plastic case
- Class Ⅱ power unit, no FG
- Suitable for LED related fixture or appliance (such as LED Decoration or Advertisement devices)(Note.7)
- 100% full load burn-in test
- Low cost, high reliability
- 2 years warranty (Note.4)

IS 15885(Part 2/Sec13)
R-41027766
(for 700mA,1050mA,1400mA,2800mA only)

IP67

SPECIFICATION

MODEL		LPC-150-350	LPC-150-500	LPC-150-700	LPC-150-1050	LPC-150-1400	LPC-150-1750	LPC-150-2100	LPC-150-2450	LPC-150-2800	LPC-150-3150
OUTPUT	RATED CURRENT	350mA	500mA	700mA	1050mA	1400mA	1750mA	2100mA	2450mA	2800mA	3150mA
	CURRENT ACCURACY	±5.0%									
	CONSTANT CURRENT REGION Note.5	215 ~ 430V	150 ~ 300V	107V ~ 215V	72V ~ 144V	54V ~ 108V	43V ~ 86V	36V ~ 72V	31V ~ 62V	27V ~ 54V	24V ~ 48V
	RATED POWER	150.5W	150W	150.5W	151.2W	151.2W	150.5W	151.2W	151.9W	151.2W	151.2W
	RIPPLE CURRENT	±5%									
	RIPPLE & NOISE	2Vp-p	1.5Vp-p	1Vp-p	1Vp-p	1Vp-p	1Vp-p	1Vp-p	1Vp-p	1Vp-p	1Vp-p
	VOLTAGE TOLERANCE	±2.0%									
	LINE REGULATION	±1%									
	SETUP, RISE TIME	1000ms, 80ms / 230VAC at full load									
	HOLD UP TIME (Typ.)	16ms/230VAC at full load									
INPUT	VOLTAGE RANGE Note.2	180 ~ 305VAC 254VDC ~ 431VDC									
	FREQUENCY RANGE	47 ~ 63Hz									
	EFFICIENCY (Typ.)	90%									
	AC CURRENT (Typ.)	1.7 A / 230VAC 1.5A / 277VAC									
	INRUSH CURRENT (Typ.)	COLD START 40A(t_{width}=750μs measured at 50% I_{peak}) at 230VAC									
	MAX. No. of PSUs on 16A CIRCUIT BREAKER	3 units (circuit breaker of type B) / 6 units (circuit breaker of type C) at 230VAC									
	LEAKAGE CURRENT	<0.25mA / 277VAC									
PROTECTION	SHORT CIRCUIT	Hiccup mode, recovers automatically after fault condition is removed									
	OVER VOLTAGE	440 ~ 470V	330 ~ 365V	235 ~ 265V	158 ~ 188V	115 ~ 135V	96 ~ 115V	80 ~ 97V	69 ~ 80V	63 ~ 75V	55 ~ 65V
		Protection type : Shut down and latch off o/p voltage re-power on to recovery									
	OVER TEMPERATURE	Shut down o/p voltage, recovers automatically after temperature goes down									
ENVIRONMENT	WORKING TEMP.	-25 ~ +50℃ (Refer to "Derating Curve")									
	WORKING HUMIDITY	10 ~ 95% RH non-condensing									
	STORAGE TEMP., HUMIDITY	-40 ~ +70℃, 10 ~ 95% RH									
	TEMP. COEFFICIENT	±0.03%/℃ (0 ~ 50℃)									
	VIBRATION	10 ~ 500Hz, 2G 10min./1cycle, period for 60min. each along X, Y, Z axes									
SAFETY & EMC	SAFETY STANDARDS	BIS IS15885(for 700mA,1050mA,1400mA,2800mA only), EAC TP TC 004, IP67;IEC/EN 62368-1 approved;									
	WITHSTAND VOLTAGE	I/P-O/P:3KVAC									
	ISOLATION RESISTANCE	I/P-O/P:100M Ohms / 500VDC / 25℃/ 70% RH									
	EMC EMISSION	Compliance to EN55032(CISPR32) Class B; EN61000-3-2 Class A(≤80% load); EN61000-3-3, EAC TP TC 020									
	EMC IMMUNITY	Compliance to EN61000-4-2,3,4,5,6,8,11, EN55024, light industry level , criteria A, EAC TP TC 020									
OTHERS	MTBF	479K hrs min. MIL-HDBK-217F (25℃)									
	DIMENSION	191*63*37.5mm (L*W*H)									
	PACKING	0.74Kg; 20pcs/15.8Kg/0.95CUFT									

NOTE

1. All parameters NOT specially mentioned are measured at 230VAC input, rated load and 25℃ of ambient temperature.
2. Derating may be needed under low input voltages. Please check the static characteristics for more details.
3. The power supply is considered as a component that will be operated in combination with final equipment. Since EMC performance will be affected by the complete installation, the final equipment manufacturers must re-qualify EMC Directive on the complete installation again.
4. Refer to warranty statement.
5. Constant current operation region is within 50% ~100% rated output voltage. This is the suitable operation region for LED related applications, but please reconfirm special electrical requirements for some specific system design.
6. Suitable for indoor use or outdoor use without direct sunlight exposure, please avoid immerse in the water over 30minutes.
7. The ambient temperature derating of 3.5℃/1000m with fanless models and of 5℃/1000m with fan models for operating altitude higher than 2000m(6500ft).
8. For any application note and IP water proof function installation caution, please refer our user manual before using. https://www.meanwell.com/Upload/PDF/LED_EN.pdf
9. This product is not intended for LED applications in the EU.(In the EU NPF/LPF/XLG series are recommended.)
10. To fulfill requirements of latest ErP regulation for lighting luminaires, this LED Driver can only be used behind a switch without permanently connected to mains.

■ Mechanical Specification

Case No. LPC-150 Unit:mm

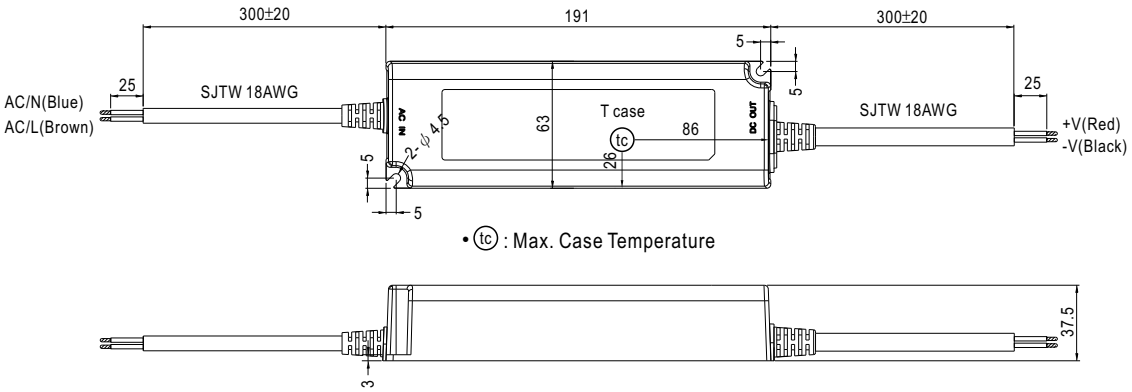

• tc : Max. Case Temperature

■ Recommend Mounting Direction

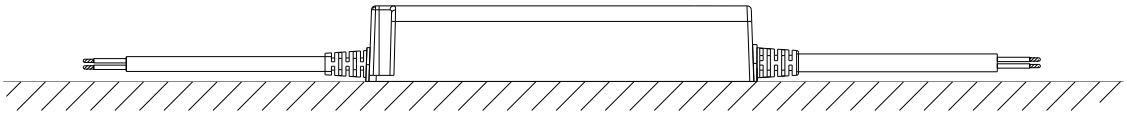

■ Block Diagram

PWM fosc : 67KHz

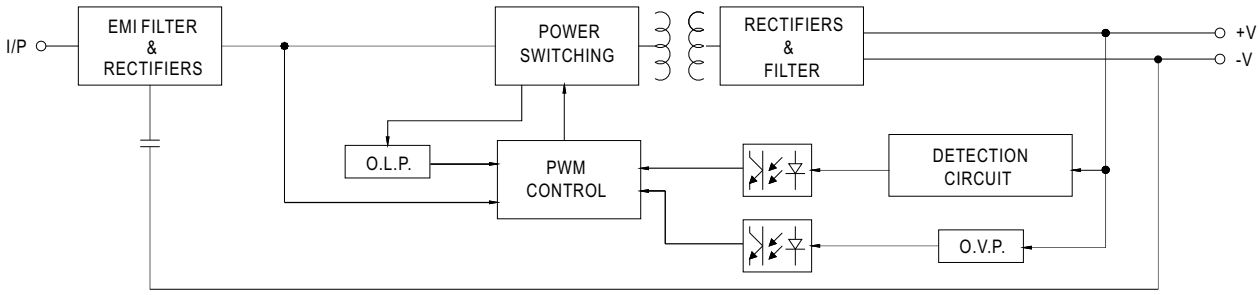

■ Derating Curve

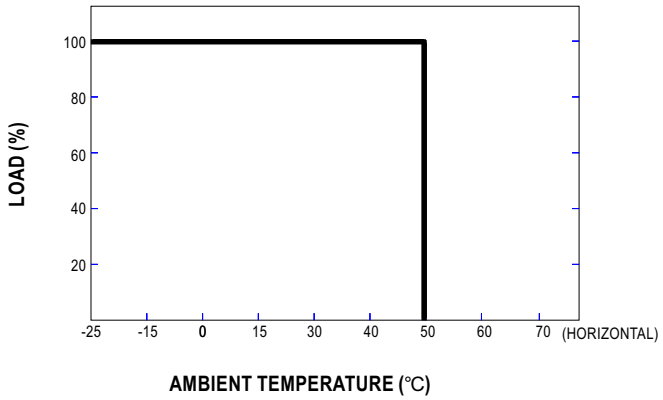

■ Static Characteristics

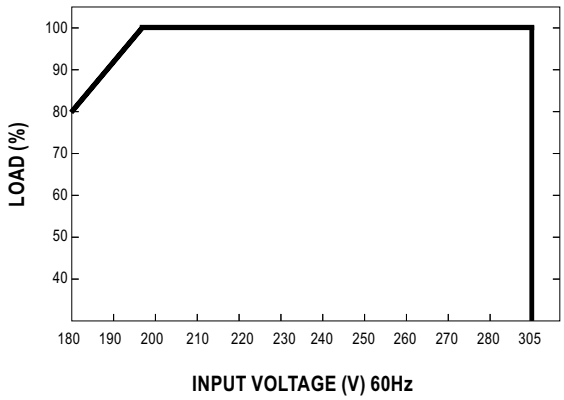

Компания «ЭлектроПласт» предлагает заключение долгосрочных отношений при поставках импортных электронных компонентов на взаимовыгодных условиях!

Наши преимущества:

- Оперативные поставки широкого спектра электронных компонентов отечественного и импортного производства напрямую от производителей и с крупнейших мировых складов;
- Поставка более 17-ти миллионов наименований электронных компонентов;
- Поставка сложных, дефицитных, либо снятых с производства позиций;
- Оперативные сроки поставки под заказ (от 5 рабочих дней);
- Экспресс доставка в любую точку России;
- Техническая поддержка проекта, помощь в подборе аналогов, поставка прототипов;
- Система менеджмента качества сертифицирована по Международному стандарту ISO 9001;
- Лицензия ФСБ на осуществление работ с использованием сведений, составляющих государственную тайну;
- Поставка специализированных компонентов (Xilinx, Altera, Analog Devices, Intersil, Interpoint, Microsemi, Aeroflex, Peregrine, Syfer, Eurofarad, Texas Instrument, Miteq, Cobham, E2V, MA-COM, Hittite, Mini-Circuits,General Dynamics и др.);

Помимо этого, одним из направлений компании «ЭлектроПласт» является направление «Источники питания». Мы предлагаем Вам помощь Конструкторского отдела:

- Подбор оптимального решения, техническое обоснование при выборе компонента;
- Подбор аналогов;
- Консультации по применению компонента;
- Поставка образцов и прототипов;
- Техническая поддержка проекта;
- Защита от снятия компонента с производства.

Как с нами связаться

Телефон: 8 (812) 309 58 32 (многоканальный)
Факс: 8 (812) 320-02-42
Электронная почта: org@eplast1.ru
Адрес: 198099, г. Санкт-Петербург, ул. Калинина, дом 2, корпус 4, литера А.