# 80387DX
## Math Coprocessor

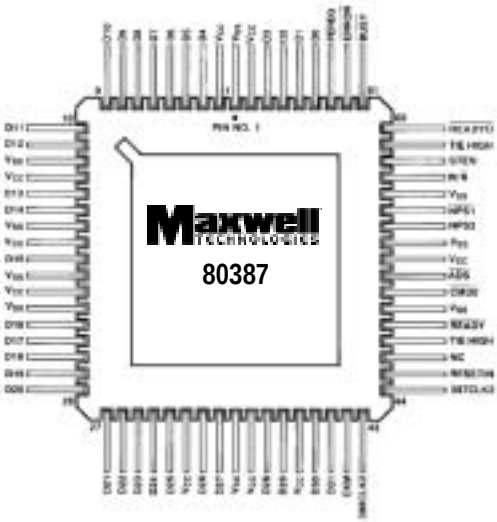


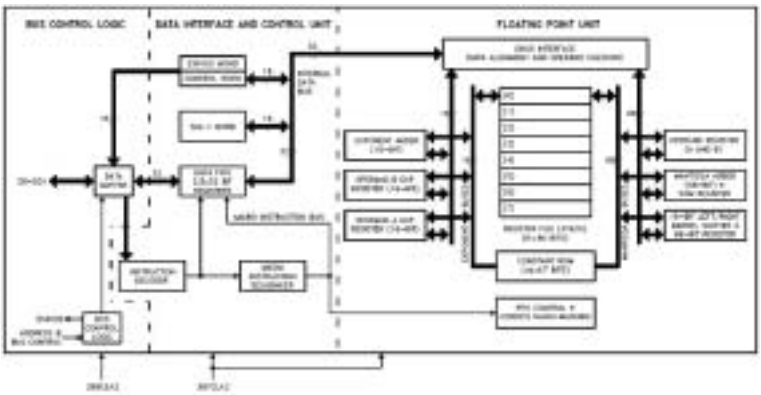

**Logic Diagram**

## FEATURES:

- 80-Bit numeric processor
- RAD-PAK® radiation hardened against natural space radiation
- Total dose hardness:
  - > 100 krad (Si)
  - dependant upon space mission
- Single Event Effects:
  - SEU Threshold is ~ 3.38 MeV/mg/cm$^2$
  - SEL Threshold = 37.1 - 59.9 MeV/mg/cm$^2$
- Package: 68-pin RAD-PA® quad flat pack
- Eight 80-bit numeric registers, usable as individual addressable general registers or as a register stack
- Data types include:
  - 32-, 64-, 80-bit floating point
  - 32-, 64-bit integers
  - 18-digit BCD operands
- 5 V Only power
- Built-in exception handling
- Upward object code compatible with All 80X87DX microprocessors
- Full-range transcendental operations for SINE, COSINE, TANGENT, ARCTANGENT and LOGARITHM

## DESCRIPTION:

Maxwell's 80387DX high speed microcircuit features a greater than 100 kilorad (Si) total dose tolerance. Using Maxwell's radiation hardened RAD-PAK® packaging technology, the 80387DX is a high-performance numerics processor that extends the 80386DX architecture with floating point, extended integer and BCD data types. The computing system fully conforms to the ANSI/IEEE floating-point standard. Using a numerics oriented architecture, the 80387DX adds over seventy mnemonics to the 80386DX instruction set, making the 80386DX/80387DX a complete solution for high-performance numerics processing.

Maxwell Technologies' patented RAD-PAK packaging technology incorporates radiation shielding in the microcircuit package. It eliminates the need for box shielding while providing the required radiation shielding for a lifetime in orbit or space mission. In a GEO orbit, RAD-PAK provides greater than 100 krad (Si) radiation dose tolerance. This product is available with screening up to Class S.



(858) 503-3300 - Fax: (858) 503-3301 - www.maxwell.com

©2002 Maxwell Technologies
All rights reserved.

## TABLE 1. PINOUT DESCRIPTION

| PIN | SYMBOL | DESCRIPTION |
|---|---|---|
| 1, 12, 19, 21, 35, 49, 53, 56 | $V_{SS}$ | Ground |
| 2, 13, 20, 32, 36, 39, 52, 68 | $V_{CC}$ | Positive Power Supply |
| 3-11, 18, 22-31, 33, 34, 37, 38, 40, 41, 64-67 | D4-D12, D15, D16-25, D26, D27, D28, D29, D30, D31, D0-D3 | Data Bus |
| 42 | CKM | Clock Mode |
| 43 | 386CLK2 | 386 CPU Clock 2 |
| 44 | 387CLK2 | 387 MCP Clock 2 |
| 45 | RESETIN | System Reset |
| 46 | NC | Not Connected |
| 47 59 | Tie High | Tie High |
| 48 | $\overline{\text{READY}}$ | Bus Ready Input |
| 50 | $\overline{\text{CMD0}}$ | Command |
| 51 | $\overline{\text{ADS}}$ | Address Strobe |
| 54 | NPS2 | MCP Select #2 |
| 55 | $\overline{\text{NPS1}}$ | MCP Select #1 |
| 57 | W/$\overline{\text{R}}$ | Write/Read |
| 58 | STEN | Status Enable |
| 60 | $\overline{\text{READYO}}$ | Ready Output |
| 61 | $\overline{\text{BUSY}}$ | Busy Status |
| 62 | $\overline{\text{ERROR}}$ | Error Status |
| 63 | PEREQ | Processor Extension Request |

## TABLE 2. ABSOLUTE MAXIMUM RATINGS

| PARAMETER | SYMBOL | MIN | MAX | UNIT |
|---|---|---|---|---|
| Voltage, any pin, with respect to Ground | $V_{CC}$ | -0.5 | $V_{CC}$+0.5 | V |
| Power Dissipation | $P_D$ | -- | 1.5 | W |
| Storage Temperature Range | $T_S$ | -65 | 150 | ˚C |
| Operating Temperature Range | $T_A$ | -55 | 125 | ˚C |
| Lead Temperature (soldering 10 seconds) | | -- | 260 | ˚C |



©2002 Maxwell Technologies
All rights reserved.

## TABLE 3. DELTA LIMITS

| PARAMETER | VARIATION |
|---|---|
| $I_{LI}$ | ± 1.5 µA |
| $I_{LO}$ | ±1.5 µA |
| $I_{CC}$ CLK2 = 32 MHz | ±25 mA |
| $I_{CC}$ CLK2 = 50 MHz | ±39 mA |

## TABLE 4. RECOMMENDED OPERATING CONDITIONS

| PARAMETER | SYMBOL | MIN | MAX | UNIT |
|---|---|---|---|---|
| Supply Voltage | $V_{CC}$ | 4.75 | 5.25 | V |
| Input Low Voltage | $V_{IL}$ | -0.3 | 0.8 | V |
| Input High Voltage | $V_{IH}$ | 2.0 | $V_{CC}$ +0.3 | V |
| Operating Temperature | $T_A$ | -55 | 125 | °C |

## TABLE 5. 80387DX DC ELECTRICAL CHARACTERISTICS

($V_{CC}$ = 4.75V TO 5.25V; $T_A$ = -55 TO +125°C, UNLESS OTHERWISE SPECIFIED)

| PARAMETER | SYMBOL | TEST CONDITIONS | MIN | MAX | UNIT |
|---|---|---|---|---|---|
| Input Low Voltage | $V_{IL}$[1] | | --<br>-- | 0.8<br>-- | V |
| Input High Voltage | $V_{IH}$[1] | | 2.0 | -- | V |
| 386 CLK2 Input Low Voltage | $V_{CL}$ | | -- | 0.8 | V |
| 386 CLK2 Input High Voltage | $V_{CH}$ | | 3.7 | -- | V |
| Output Low Voltage | $V_{OL}$ | $I_{OL}$ = 4 mA, D0-D31, $I_{OL}$ = 2.5 mA<br>READYO , ERROR, BUSY, PEREQ | -- | 0.45 | V |
| Output High Voltage | $V_{OH}$ | $I_{OH}$ = -1 mA, D0-D31, $I_{OH}$ = -0.6 mA<br>READYO, READYO, ERROR, BUSY, PEREQ | 2.4 | -- | V |
| Input Leakage Current | $I_{LI}$ | $0V \le V_{IN} \le V_{CC}$ | | ±15 | µA |
| Output Leakage Current | $I_{LO}$ | $0.45V \le V_{OUT} \le V_{CC}$ | -- | ±15 | µA |
| Power Supply Current | $I_{CC}$ | CLK2 = 32 MHz<br>CLK2 = 40 MHz<br>CLK2 = 50 MHz[2] | --<br>--<br>-- | 250<br>310<br>390 | mA |
| Input Capacitance[3] | $C_{IN}$ | $F_C$ = 1 MHz | -- | 10 | pF |
| Output Capacitance[3] | $C_O$ | $F_C$ = 1 MHz | -- | 12 | pF |
| CLK2 Capacitance[3] | $C_{CLK}$ | $F_C$ = 1 MHz | -- | 20 | pF |

1. This parameter is for all inputs, including 387CLK2 but excluding 386CLK2.
2. Icc is measured at steady state, maximum capacitive loading on the outputs, and worst-case DC level at the inputs; 386CLK2 at the same frequency as 387CLK2.
3. Guaranteed By Design



©2002 Maxwell Technologies
All rights reserved.

## TABLE 6. 80387DX COMBINATIONS OF BUS INTERFACE AND EXECUTION SPEEDS

($V_{CC}$ = 4.75V TO 5.25V; $T_A$ = -55 TO +125°C, UNLESS OTHERWISE SPECIFIED)

| PARAMETER | SYMBOL | TEST CONDITIONS | MIN | MAX | UNIT |
|---|---|---|---|---|---|
| Bus INterface Unit | | | | | MHz |
| -16 | | | 16 | -- | |
| -20 | | | 20 | -- | |
| -25 | | | 25 | -- | |
| Execution Unit | | | | | MHz |
| -16 | | | 16 | -- | |
| -20 | | | 20 | -- | |
| -25 | | | 25 | -- | |

## TABLE 7. 80387DX TIMING REQUIREMENTS OF THE EXECUTION UNIT

($V_{CC}$ = 4.75V TO 5.25V; $T_A$ = -55 TO +125°C, UNLESS OTHERWISE SPECIFIED)

| PARAMETER | SYMBOL | TEST CONDITION | MIN | MAX | UNIT |
|---|---|---|---|---|---|
| 387CLK2 Period[1] | $t_1$ | At 2V | | | ns |
| -16 | | | 31 | 125 | |
| -20 | | | 25 | 125 | |
| -25 | | | 20 | 125 | |
| 387CLK2 High Time | $t_{2a}$ | At 2V | | | ns |
| -16 | | | 9 | -- | |
| -20 | | | 8 | -- | |
| -25 | | | 7 | -- | |
| 387CLK2 High Time[1] | $t_{2b}$ | At 3.7V | | | ns |
| -16 | | | 5 | -- | |
| -20 | | | 5 | -- | |
| -25 | | | 4 | -- | |
| 387CLK2 Low Time | $t_{3a}$ | At 2V | | | ns |
| -16 | | | 9 | -- | |
| -20 | | | 8 | -- | |
| -25 | | | 7 | -- | |
| 387CLK2 Low Time[1] | $t_{3b}$ | At 0.8V | | | ns |
| -16 | | | 7 | -- | |
| -20 | | | 6 | -- | |
| -25 | | | 5 | -- | |
| 387CLK2 Fall Time[1] | $t_4$ | At 3.7V to 0.8V | | | ns |
| -16 | | | -- | 8 | |
| -20 | | | -- | 8 | |
| -25 | | | -- | 7 | |
| 387CLK2 Rise Time[1] | $t_5$ | At 0.8V to 3.7V | | | ns |
| -16 | | | -- | 8 | |
| -20 | | | -- | 8 | |
| -25 | | | -- | 7 | |

1. Guaranteed By Design



©2002 Maxwell Technologies
All rights reserved.

TABLE 8. 80387DX TIMING REQUIREMENTS OF THE BUS INTERFACE UNIT (OUTPUT TRIP LEVEL = 1.5V)
($V_{CC}$ = 4.75V TO 5.25V; $T_A$ = -55 TO +125°C, UNLESS OTHERWISE SPECIFIED)

| PARAMETER | CONDITIONS | SYMBOL | MIN | MAX | UNIT |
|---|---|---|---|---|---|
| 386CLK2 Period[1] | At 2.0V | $t_1$ | | | ns |
| -16 | | | 31 | 125 | |
| -20 | | | 25 | 125 | |
| -25 | | | 20 | 125 | |
| 386CLK2 High Time | At 2.0V | $t_{2a}$ | | | ns |
| -16 | | | 9 | -- | |
| -20 | | | 8 | -- | |
| -25 | | | 7 | -- | |
| 386CLK2 High Time1 | At 3.7V | $t_{2b}$ | | | ns |
| -16 | | | 5 | -- | |
| -20 | | | 5 | -- | |
| -25 | | | 4 | -- | |
| 386CLK2 Low Time | At 2V | $t_{3a}$ | | | ns |
| -16 | | | 9 | -- | |
| -20 | | | 8 | -- | |
| -25 | | | 7 | -- | |
| 386CLK2 Low Time[1] | At 0.8V | $t_{3b}$ | | | ns |
| -16 | | | 7 | -- | |
| -20 | | | 6 | -- | |
| -25 | | | 5 | -- | |
| 386CLK2 Fall Time[1] | At 3.7V to 0.8V | $t_4$ | | | ns |
| -16 | | | -- | 8 | |
| -20 | | | -- | 8 | |
| -25 | | | -- | 7 | |
| 386CLK2 Rise Time[1] | At 0.8V to 3.7V | $t_5$ | | | ns |
| -16 | | | -- | 8 | |
| -20 | | | -- | 8 | |
| -25 | | | -- | 7 | |
| 386 CLK2/387CLK2 Ratio | | -- | 10/16 | 14/10 | -- |
| $\overline{\text{READYO}}$ Out Delay | $C_L$ = 50 pF | $t_7$ | | | ns |
| -16 | | | 4 | 34 | |
| -20 | | | 3 | 31 | |
| -25 | | | 3 | 24 | |
| PEREQ, $\overline{\text{ERROR}}$ Out Delay | $C_L$ = 50 pF | $t_7$ | | | ns |
| -16 | | | 5 | 34 | |
| -20 | | | 5 | 34 | |
| -25 | | | 4 | 33 | |
| $\overline{\text{BUSY}}$ Out Delay | $C_L$ = 50 pF | $t_7$ | | | ns |
| -16 | | | 5 | 34 | |
| -20 | | | 5 | 29 | |
| -25 | | | 4 | 29 | |



©2002 Maxwell Technologies
All rights reserved.

TABLE 8. 80387DX TIMING REQUIREMENTS OF THE BUS INTERFACE UNIT (OUTPUT TRIP LEVEL = 1.5V)

($V_{CC}$ = 4.75V TO 5.25V; $T_A$ = -55 TO +125°C, UNLESS OTHERWISE SPECIFIED)

| PARAMETER | CONDITIONS | SYMBOL | MIN | MAX | UNIT |
|---|---|---|---|---|---|
| D31 - D0 Out Delay | $C_L$ = 50 pF | $t_8$ | | | ns |
| -16 | | | 1 | 54 | |
| -20 | | | 1 | 54 | |
| -25 | | | 0 | 50 | |
| D31 - D0 Setup Time | | $t_{10}$ | 11 | | ns |
| D31 - D0 Hold Delay | | $t_{11}$ | 11 | | ns |
| D31 - D0 Float Time | $C_L$ = 50 pF[2] | $t_{12}$ | | | ns |
| -16 | | | 6 | 33 | |
| -20 | | | 6 | 27 | |
| -25 | | | 5 | 24 | |
| $\overline{\text{PEREQ}}$, $\overline{\text{BUSY}}$, $\overline{\text{ERROR}}$, $\overline{\text{READYO}}$ Float Time[1] | $C_L$ = 50 pF[1] | $t_{13}$ | | | ns |
| -16 | | | 1 | 60 | |
| -20 | | | 1 | 50 | |
| -25 | | | 1 | 40 | |
| $\overline{\text{ADS}}$, $\overline{\text{W/R}}$ Setup Time | | $t_{14}$ | | | ns |
| -16 | | | 26 | -- | |
| -20 | | | 21 | -- | |
| -25 | | | 16 | -- | |
| $\overline{\text{ADS}}$, $\overline{\text{W/R}}$ Hold Time | | $t_{15}$ | | | ns |
| -16 | | | 5 | -- | |
| -20 | | | 5 | -- | |
| -25 | | | 4 | -- | |
| $\overline{\text{READY}}$ SetupTime | | $t_{16}$ | | | ns |
| -16 | | | 21 | -- | |
| -20 | | | 12 | -- | |
| -25 | | | 9 | -- | |
| $\overline{\text{READY}}$ Hold Time | | $t_{17}$ | | | ns |
| -16 | | | 4 | -- | |
| -20 | | | 4 | -- | |
| -25 | | | 4 | -- | |
| $\overline{\text{CMDO}}$ SetupTime | | $t_{16}$ | | | ns |
| -16 | | | 21 | -- | |
| -20 | | | 19 | -- | |
| -25 | | | 16 | -- | |
| $\overline{\text{CMDO}}$ HoldTime | | $t_{17}$ | | | ns |
| -16 | | | 2 | -- | |
| -20 | | | 4 | -- | |
| -25 | | | 4 | -- | |
| $\overline{\text{NPS1}}$, NPS2 Setup Time | | $t_{16}$ | | | ns |
| -16 | | | 21 | -- | |
| -20 | | | 19 | -- | |
| -25 | | | 16 | -- | |



©2002 Maxwell Technologies
All rights reserved.

## TABLE 8. 80387DX TIMING REQUIREMENTS OF THE BUS INTERFACE UNIT (OUTPUT TRIP LEVEL = 1.5V)

($V_{CC}$ = 4.75V TO 5.25V; $T_A$ = -55 TO +125°C, UNLESS OTHERWISE SPECIFIED)

| PARAMETER | CONDITIONS | SYMBOL | MIN | MAX | UNIT |
|---|---|---|---|---|---|
| $\overline{NPS1}$, NPS2 Hold Time | | $t_{17}$ | | | ns |
| -16 | | | 2 | -- | |
| -20 | | | 2 | -- | |
| -25 | | | 4 | -- | |
| STEN Setup Time | | $t_{16}$ | | | ns |
| -16 | | | 21 | -- | |
| -20 | | | 21 | -- | |
| -25 | | | 15 | -- | |
| STEN Hold Time | | $t_{17}$ | | | ns |
| -16 | | | 2 | -- | |
| -20 | | | 2 | -- | |
| -25 | | | 4 | -- | |
| RESETIN Setup Time | | $t_{18}$ | | | ns |
| -16 | | | 13 | -- | |
| -20 | | | 12 | -- | |
| -25 | | | 10 | -- | |
| RESETIN Hold Time | | $t_{19}$ | | | ns |
| -16 | | | 4 | -- | |
| -20 | | | 4 | -- | |
| -25 | | | 3 | -- | |

1. Guaranteed By Design

2. Float condition occurs when maximum output current becomes less than $I_{LO}$ in magnitude. Float Delay is not tested.

## TABLE 9. 80387DX TIMING REQUIREMENT OF OTHER PARAMETER

| PARAMETER | SYMBOL | MIN | MAX | UNIT |
|---|---|---|---|---|
| RESETIN Duration | $t_{30}$ | 40 | | (387 CLK2) |
| RESETIN Inactive to First Opcode Write | $t_{31}$ | 50 | | (387 CLK2) |
| $\overline{BUSY}$ Duration | $t_{32}$ | 6 | | (386 CLK2) |
| $\overline{ERROR}$ Inactive to $\overline{BUSY}$ Inactive | $t_{33}$ | 6 | | (386 CLK2) |
| PEREQ Inactive to $\overline{ERROR}$ Active | $t_{34}$ | 6 | | (386 CLK2) |
| $\overline{READY}$ Active to Busy Active | $t_{35}$ | 4 | 4 | (386 CLK2) |
| $\overline{READY}$ Minimum Time from Opcode Write to Opcode to Opcode/ Operand Write | $t_{36}$ | 6 | | (386 CLK2) |
| $\overline{READY}$ Minimum Time from Operand Write to Operand Write | $t_{37}$ | 8 | | (386 CLK2) |



©2002 Maxwell Technologies
All rights reserved.

FIGURE 1. TIMING DIAGRAMS - FAST TRANSITIONS TO AND FROM PIPELINED CYCLES

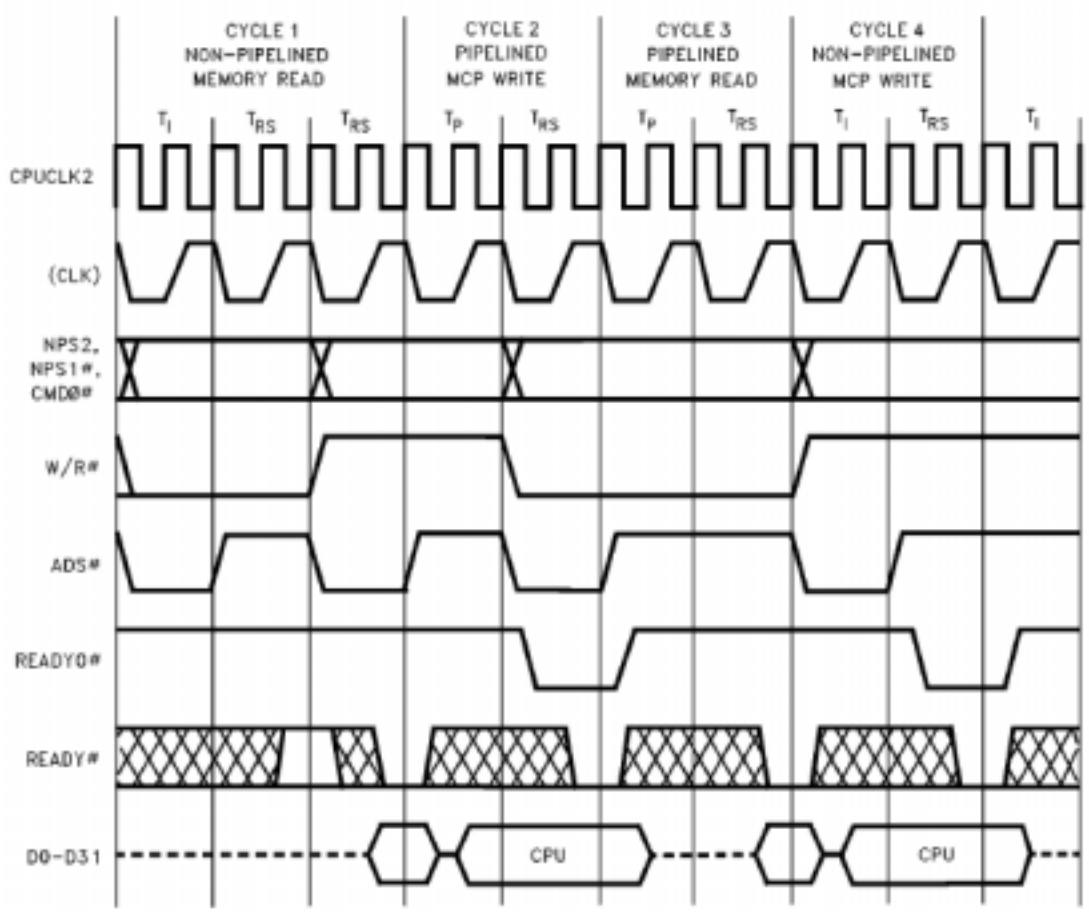




©2002 Maxwell Technologies
All rights reserved.

FIGURE 2. TIMING DIAGRAM – NON-PIPELINED READ AND WRITE CYCLES

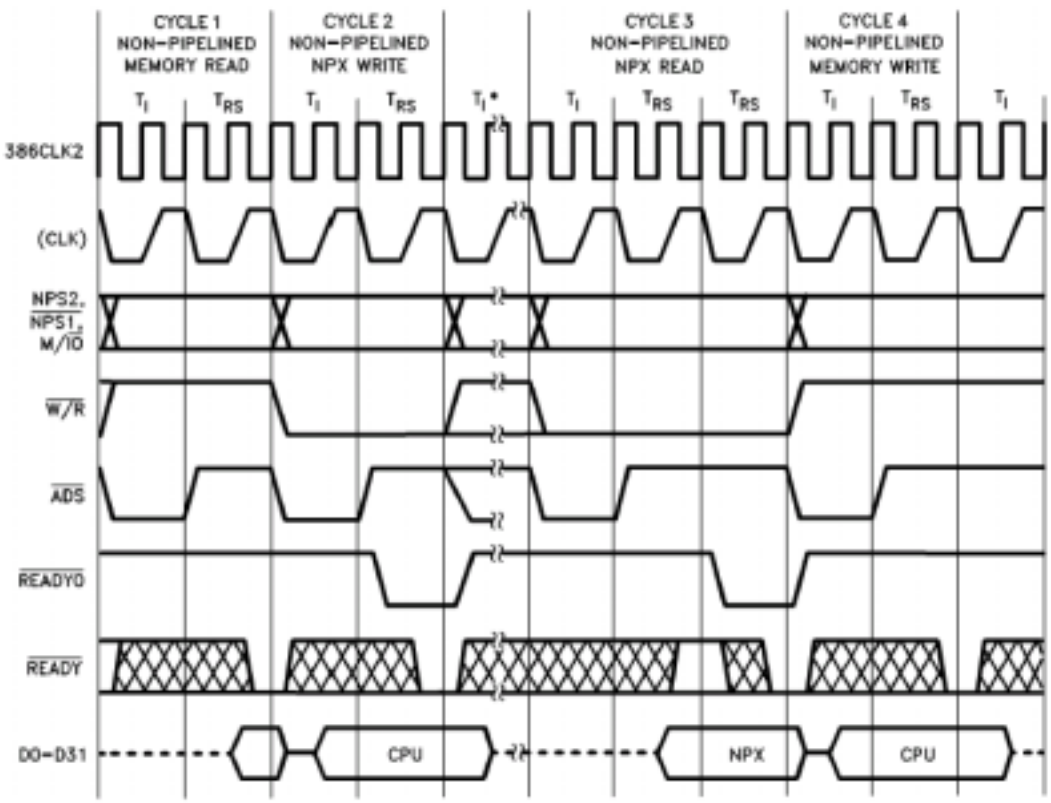


Cycles 1 & 2 represent part of the operand transfer cycle for instructions involving either 4-byte or 8-byte operand loads.
Cycles 3 & 4 represent part of the operand transfer cycle for a store operation.
*Cycles 1 & 2 could repeat here or $T_I$ states for various non-operand transfer cycles and overhead.



©2002 Maxwell Technologies
All rights reserved.

FIGURE 3. TIMING DIAGRAM – PIPLINED CYCLES WITH WAIT STATES

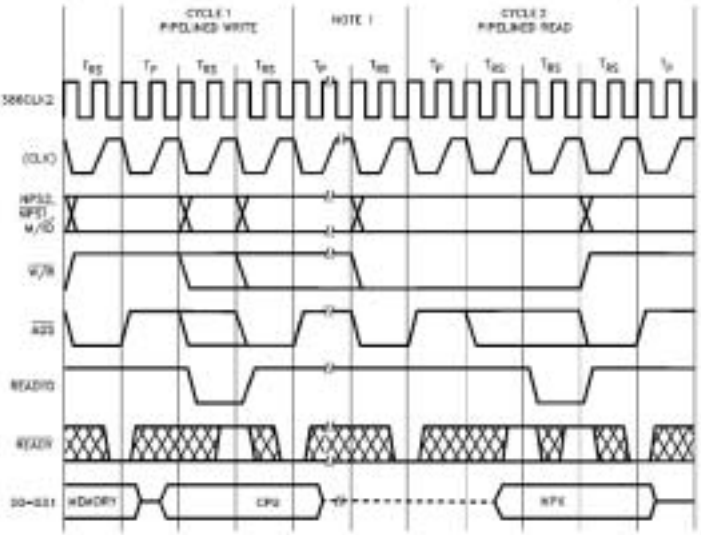


**NOTE:**
1. Cycles between operand write to the NPX and storing result.

FIGURE 4. TIMING DIAGRAM – STEN, BUSY, AND PEREQ TIMING RELATIONSHIP

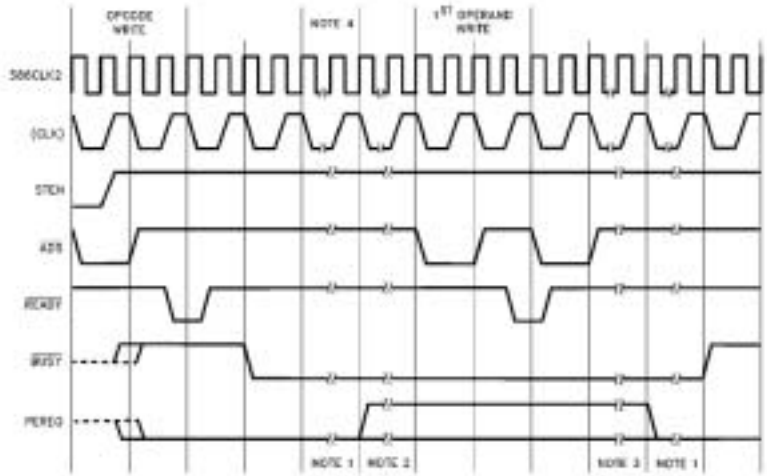


**NOTES:**
1. Instruction dependent.
2. PEREQ is an asynchronous input to the 386 processor; it may not be asserted (instruction dependent).
3. More operand transfers.
4. Memory read (operand) cycle is not shown.



©2002 Maxwell Technologies
All rights reserved.

FIGURE 5. TIMING DIAGRAM – 386CLK2/387CLK2 WAVEFORM AND MEASUREMENT POINTS FOR INPUT/ OUTPUT AC SPECIFICATIONS

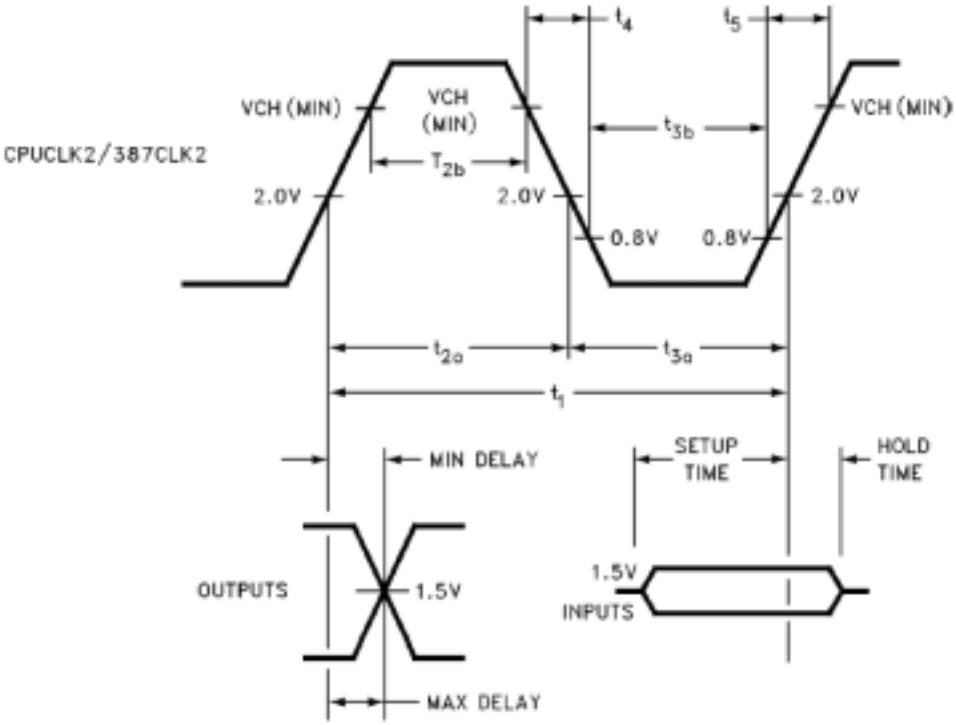


FIGURE 6. TIMING DIAGRAM – TEST CIRCUIT

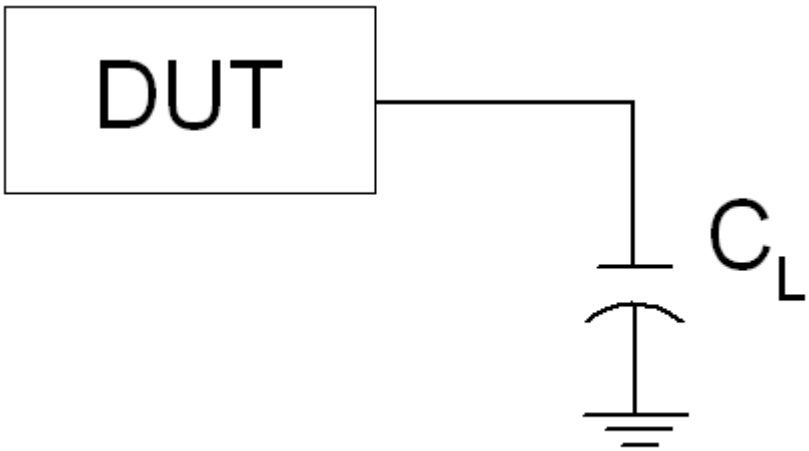




©2002 Maxwell Technologies
All rights reserved.

FIGURE 7. TIMING DIAGRAM – RESET

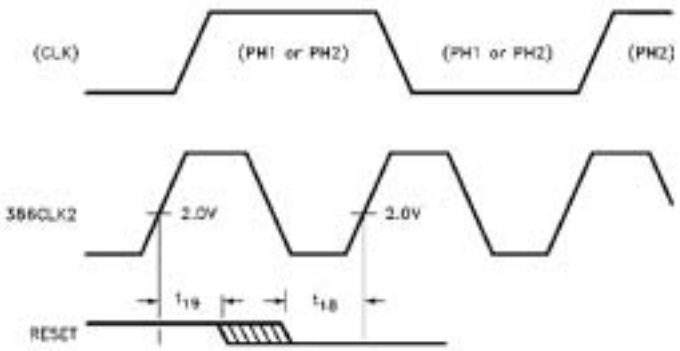


**NOTE:** The second internal processor phase following RESET high to low transition is PH2.

FIGURE 8. TIMING DIAGRAM – OUTPUT

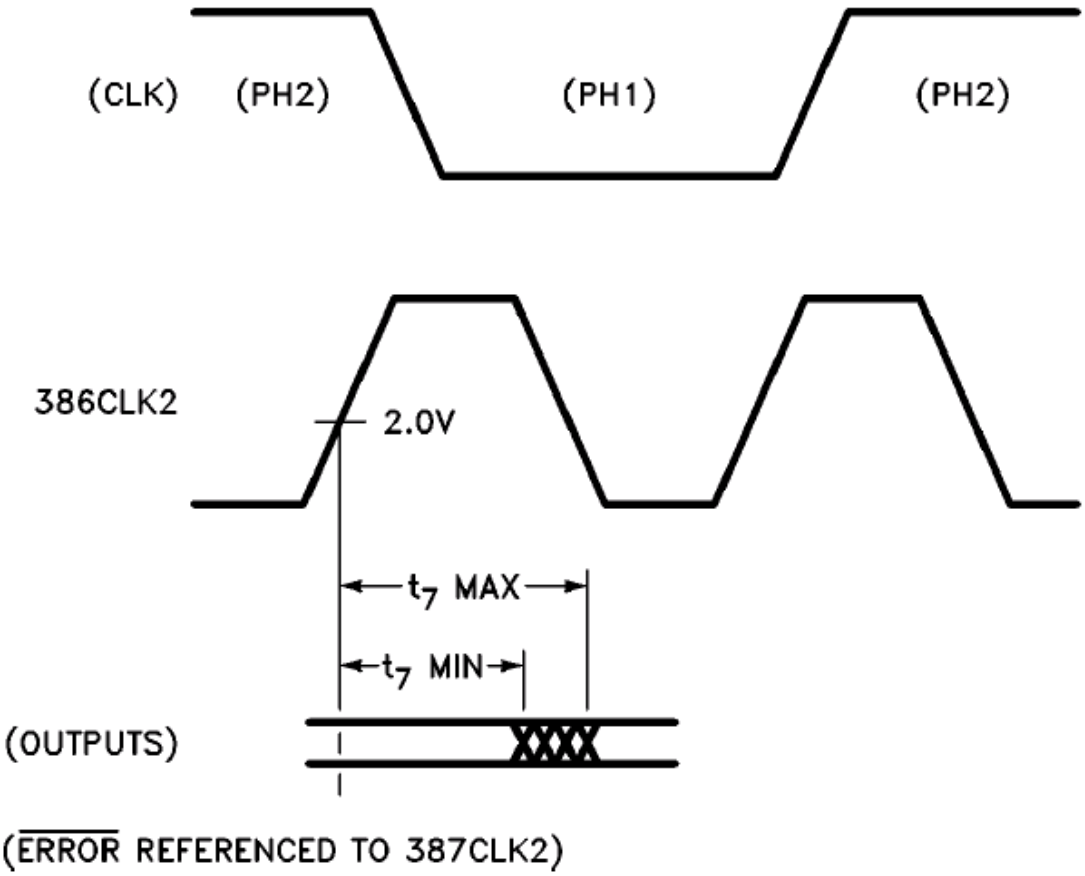




©2002 Maxwell Technologies
All rights reserved.

FIGURE 9. TIMING DIAGRAM – INPUT AND I/O SIGNALS

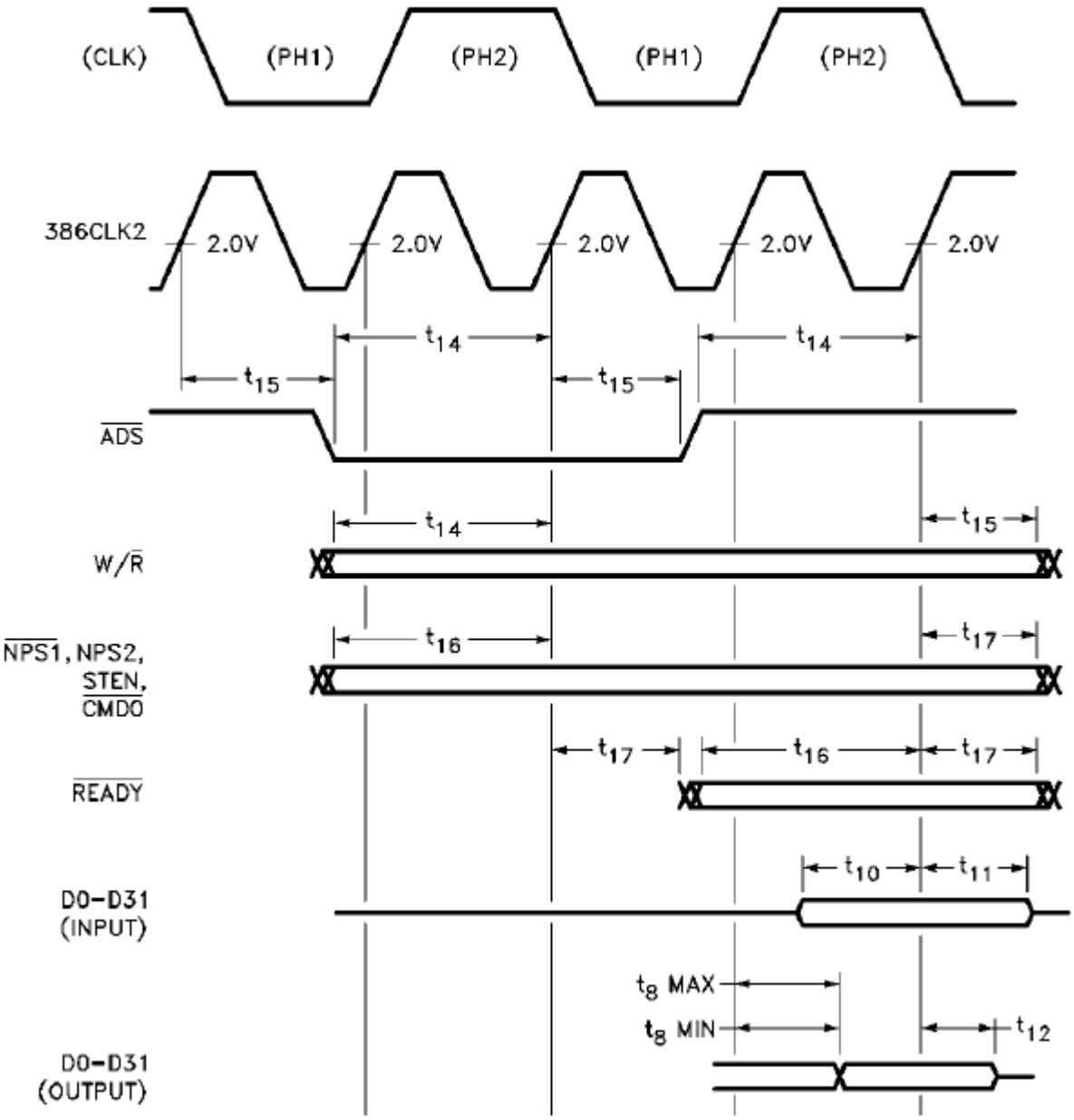




©2002 Maxwell Technologies
All rights reserved.

FIGURE 10. TIMING DIAGRAM – FLOAT FROM STEN

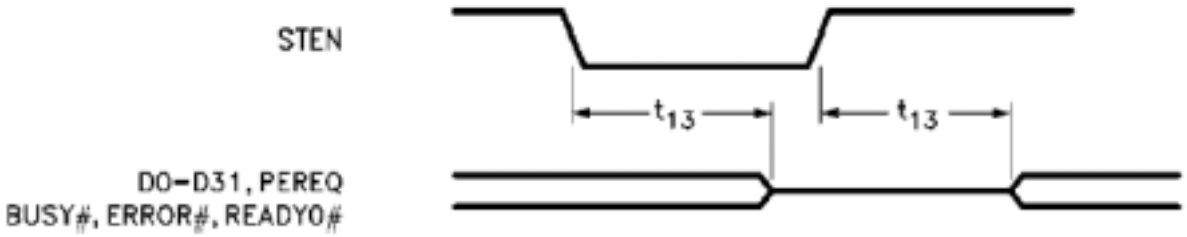


FIGURE 11. TIMING DIAGRAM – OTHER PARAMETERS

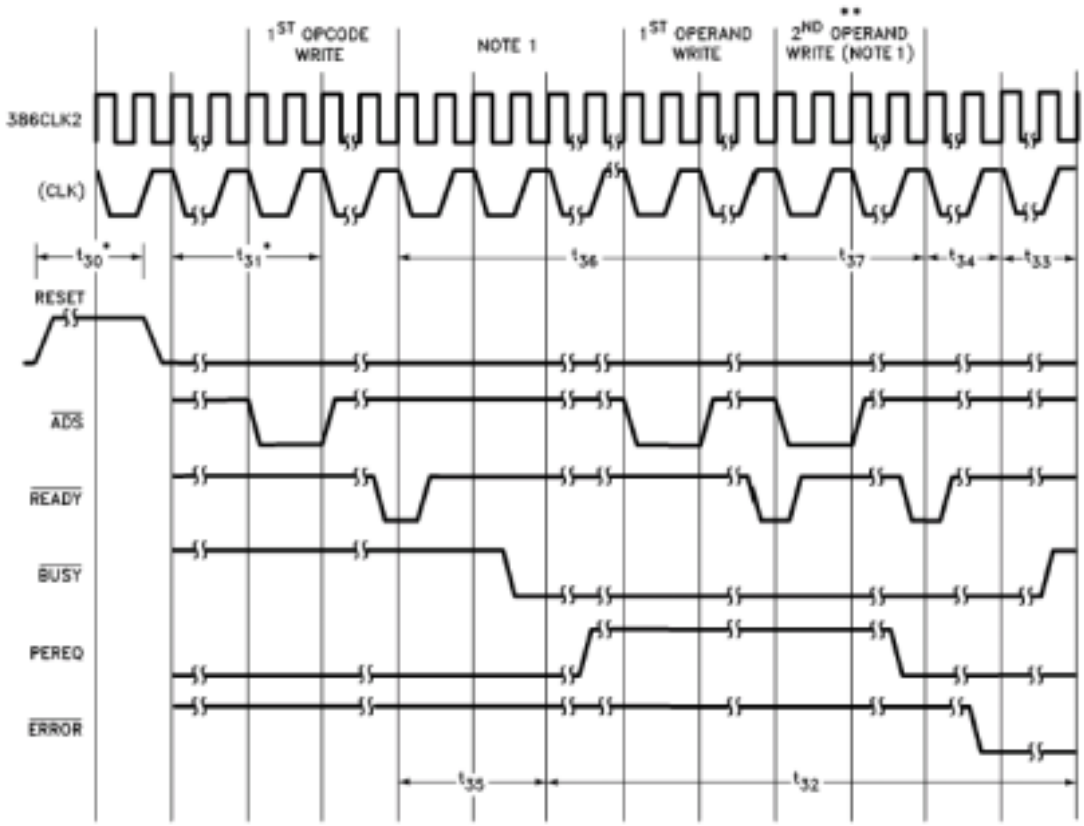


* In 387CLK2's
** or last operand

**NOTE:**
1. Memory read (operand) cycle is not shown.



©2002 Maxwell Technologies
All rights reserved.

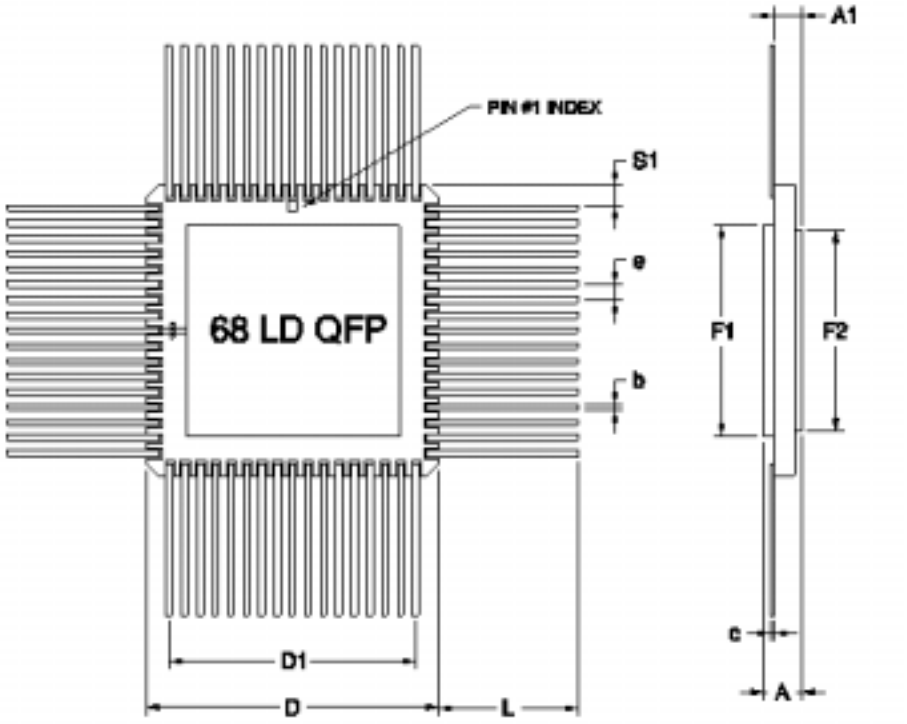


14 PIN RAD-PAK® FLAT PACKAGE

| SYMBOL | DIMENSION | | |
|---|---|---|---|
| | MIN | NOM | MAX |
| A | 0.121 | 0.135 | 0.145 |
| b | 0.016 | 0.018 | 0.020 |
| c | 0.008 | 0.010 | 0.012 |
| D | 0.940 | 0.950 | 0.960 |
| D1 | 0.800 BSC | | |
| e | 0.050 BSC | | |
| S1 | 0.013 | 0.066 | -- |
| F1 | 0.645 | 0.650 | 0.655 |
| F2 | 0.645 | 0.650 | 0.655 |
| L | 0.477 | 0.487 | 0.497 |
| A1 | 0.080 | 0.090 | 0.100 |
| N | 68 | | |

Note: All dimensions in inches.
Q68-01



©2002 Maxwell Technologies
All rights reserved.

Important Notice:

These data sheets are created using the chip manufacturer's published specifications. Maxwell Technologies verifies functionality by testing key parameters either by 100% testing, sample testing or characterization.

The specifications presented within these data sheets represent the latest and most accurate information available to date. However, these specifications are subject to change without notice and Maxwell Technologies assumes no responsibility for the use of this information.

Maxwell Technologies' products are not authorized for use as critical components in life support devices or systems without express written approval from Maxwell Technologies.

Any claim against Maxwell Technologies must be made within 90 days from the date of shipment from Maxwell Technologies. Maxwell Technologies' liability shall be limited to replacement of defective parts.



©2002 Maxwell Technologies
All rights reserved.

## Product Ordering Options

Model Number

80387DX RP Q X

| Feature | Option Details |
|---|---|
| Screening Flow | Monolithic<br>S = Maxwell Class S<br>B = Maxwell Class B<br>E = Engineering (testing @ +25°C)<br>I = Industrial (testing @ -55°C, +25°C, +125°C) |
| Package | Q = Quad Flat Pack |
| Radiation Feature | RP = RAD-PAK® package |
| Base Product Nomenclature | Math Coprocessor |



©2002 Maxwell Technologies
All rights reserved.

Компания «ЭлектроПласт» предлагает заключение долгосрочных отношений при поставках импортных электронных компонентов на взаимовыгодных условиях!

Наши преимущества:

- Оперативные поставки широкого спектра электронных компонентов отечественного и импортного производства напрямую от производителей и с крупнейших мировых складов;
- Поставка более 17-ти миллионов наименований электронных компонентов;
- Поставка сложных, дефицитных, либо снятых с производства позиций;
- Оперативные сроки поставки под заказ (от 5 рабочих дней);
- Экспресс доставка в любую точку России;
- Техническая поддержка проекта, помощь в подборе аналогов, поставка прототипов;
- Система менеджмента качества сертифицирована по Международному стандарту ISO 9001;
- Лицензия ФСБ на осуществление работ с использованием сведений, составляющих государственную тайну;
- Поставка специализированных компонентов (Xilinx, Altera, Analog Devices, Intersil, Interpoint, Microsemi, Aeroflex, Peregrine, Syfer, Eurofarad, Texas Instrument, Miteq, Cobham, E2V, MA-COM, Hittite, Mini-Circuits,General Dynamics и др.);

Помимо этого, одним из направлений компании «ЭлектроПласт» является направление «Источники питания». Мы предлагаем Вам помощь Конструкторского отдела:

- Подбор оптимального решения, техническое обоснование при выборе компонента;
- Подбор аналогов;
- Консультации по применению компонента;
- Поставка образцов и прототипов;
- Техническая поддержка проекта;
- Защита от снятия компонента с производства.

**Как с нами связаться**

**Телефон:** 8 (812) 309 58 32 (многоканальный)
**Факс:** 8 (812) 320-02-42
**Электронная почта:** org@eplast1.ru
**Адрес:** 198099, г. Санкт-Петербург, ул. Калинина, дом 2, корпус 4, литера А.