ASSY P/N	LED COLOR		
	POSITION 1	POSITION 2	POSITION 3
570-0100-010, -010F	BLANK	RED DIFFUSED	BLANK
570-0100-011, -011F	BLANK	RED DIFFUSED	RED DIFFUSED
570-0100-012, -012F	BLANK	RED DIFFUSED	GREEN DIFFUSED
570-0100-022, -022F	BLANK	GREEN DIFFUSED	GREEN DIFFUSED
570-0100-023, -023F	BLANK	GREEN DIFFUSED	YELLOW DIFFUSED
570-0100-032, -032F	BLANK	YELLOW DIFFUSED	GREEN DIFFUSED
570-0100-033, -033F	BLANK	YELLOW DIFFUSED	YELLOW DIFFUSED
570-0100-101, -101F	RED DIFFUSED	BLANK	RED DIFFUSED
570-0100-110, -110F	RED DIFFUSED	RED DIFFUSED	BLANK
570-0100-111, -111F	RED DIFFUSED	RED DIFFUSED	RED DIFFUSED
570-0100-112, -112F	RED DIFFUSED	RED DIFFUSED	GREEN DIFFUSED
570-0100-122, -122F	RED DIFFUSED	GREEN DIFFUSED	GREEN DIFFUSED
570-0100-123, -123F	RED DIFFUSED	GREEN DIFFUSED	YELLOW DIFFUSED
570-0100-130, -130F	RED DIFFUSED	YELLOW DIFFUSED	BLANK
570-0100-131, -131F	RED DIFFUSED	YELLOW DIFFUSED	RED DIFFUSED
570-0100-132, -132F	RED DIFFUSED	YELLOW DIFFUSED	GREEN DIFFUSED
570-0100-133, -133F	RED DIFFUSED	YELLOW DIFFUSED	YELLOW DIFFUSED
570-0100-200, -200F	GREEN DIFFUSED	BLANK	BLANK
570-0100-202, -202F	GREEN DIFFUSED	BLANK	GREEN DIFFUSED
570-0100-210, -210F	GREEN DIFFUSED	RED DIFFUSED	BLANK
570-0100-211, -211F	GREEN DIFFUSED	RED DIFFUSED	RED DIFFUSED
570-0100-212, -212F	GREEN DIFFUSED	RED DIFFUSED	GREEN DIFFUSED
570-0100-213, -213F	GREEN DIFFUSED	RED DIFFUSED	YELLOW DIFFUSED
570-0100-220, -220F	GREEN DIFFUSED	GREEN DIFFUSED	BLANK
570-0100-221F	GREEN DIFFUSED	GREEN DIFFUSED	RED DIFFUSED
570-0100-222, -222F	GREEN DIFFUSED	GREEN DIFFUSED	GREEN DIFFUSED
570-0100-223, -223F	GREEN DIFFUSED	GREEN DIFFUSED	YELLOW DIFFUSED
570-0100-230, -230F	GREEN DIFFUSED	YELLOW DIFFUSED	BLANK
570-0100-231, -231F	GREEN DIFFUSED	YELLOW DIFFUSED	RED DIFFUSED
570-0100-232, -232F	GREEN DIFFUSED	YELLOW DIFFUSED	GREEN DIFFUSED
570-0100-233, -233F	GREEN DIFFUSED	YELLOW DIFFUSED	YELLOW DIFFUSED
*570-0100-239, -239F	GREEN DIFFUSED	YELLOW DIFFUSED	BLUE WATER CLEAR
*570-0100-293, -293F	GREEN DIFFUSED	BLUE WATER CLEAR	YELLOW DIFFUSED
570-0100-302F	YELLOW DIFFUSED	BLANK	GREEN DIFFUSED
570-0100-303, -303F	YELLOW DIFFUSED	BLANK	YELLOW DIFFUSED
570-0100-311, -311F	YELLOW DIFFUSED	RED DIFFUSED	RED DIFFUSED
570-0100-312, -312F	YELLOW DIFFUSED	RED DIFFUSED	GREEN DIFFUSED
570-0100-322, -322F	YELLOW DIFFUSED	GREEN DIFFUSED	GREEN DIFFUSED
570-0100-323, -323F	YELLOW DIFFUSED	GREEN DIFFUSED	YELLOW DIFFUSED
570-0100-330, -330F	YELLOW DIFFUSED	YELLOW DIFFUSED	BLANK
570-0100-331, -331F	YELLOW DIFFUSED	YELLOW DIFFUSED	RED DIFFUSED
570-0100-332, -332F	YELLOW DIFFUSED	YELLOW DIFFUSED	GREEN DIFFUSED
570-0100-333, -333F	YELLOW DIFFUSED	YELLOW DIFFUSED	YELLOW DIFFUSED
570-0100-723, -723F	ORANGE DIFFUSED	GREEN DIFFUSED	YELLOW DIFFUSED

NOTES :

1. LEADS TO BE FREE OF DEFORMATION AFTER BENDING AND CUTTING
2. LED LEAD DIMENSIONS SHOWN ARE MEASURED AT HOUSING EXIT
3. PIN NUMBERS FOR REFERENCE ONLY, DESIGNATION NON-EXISTENT ON PARTS.
4. DIALIGHT PART NUMBER = 570-0100-XXX AND 570-0100-XXXF
5. *THIS ASSEMBLY CONTAINS ELECTROSTATIC DISCHARGE SENSITIVE DEVICES (ESDS). MAINTAIN ALL PRECAUTIONARY MEASURES DURING ASSEMBLY, HANDLING AND STORAGE IN ACCORDANCE WITH IPC-A-610.

REV.	ECN NO.	REVISIONS	DRN.	CKD.	APP.	DATE
A	——	NEW RELEASE	TC	D.C	A.V	11-11-99
B	——	ADDED 570-0100-133	TC	D.C	N.O.	2-29-00
C	——	CHANGED LED SPEC.	YIS	JMC	N.O.	1-30-03
D	——	ADDED P/N 570-0100-331F AND RoHS COMPLIANT NOTE; UPDATED FORMAT	TWC	MES	N.O.	6-23-05
E	——	ADDED P/N 570-0100-200 AND -200F RoHS COMPLIANT PART	TWC	TC	N.O.	9-14-05
F	——	ADDED P/Ns 570-0100-239, -239-F,-293,-293F & -331, ESD LOGO & NOTE; ADDED ALL OTHER -XXXF P/Ns AND BLUE LED CHARACTERISTICS AND MAXIMUM RATINGS	TWC	MES	N.O.	11-31-05
G	——	ADDED P/N 570-0100-723,-723F	TWC	MES	N.O.	12-12-05
H	——	LED SCHEMATIC WAS REVERSED; REVISED LED PROTRUSION WAS .060	TC	N.O.	AV	2-19-07
J	——	ADDED P/N 570-0100-210, 210F	SM	MES	N.O.	3-21-07
K	——	ADDED P/N 570-0100-012, 012F	SM	MES	N.O.	10-10-07
L	——	LEAD LENGTH WAS .110±.010 IN ERROR.	KLJ	JLC	N.O.	6-4-09
M	——	ADDED P/N 570-0100-302F	AJF	KLJ	NO	6-30-09
N	——	ADDED P/N 570-0100-221F	JTD	SM	NO	10-27-11

ABSOLUTE MAXIMUM RATINGS AT 25°C AMBIENT	RED	ORANGE	YELLOW	GREEN	BLUE	UNITS
POWER DISSIPATION	105	105	105	105	105	mW
FORWARD CURRENT	30	25	30	25	30	mA
DERATING LINEAR FROM 25°C	.40	.33	.40	.33	.42	mA/°C
REVERSE VOLTAGE	5					V
LEAD SOLDERING TEMPERATURE - 5 SEC., 1/16" FROM BODY BLUE - 3 SEC., 5/32" FROM BODY	260					°C
OPERATING TEMPERATURE	-40 TO +85					°C
STORAGE TEMPERATURE	-40 TO +85					°C

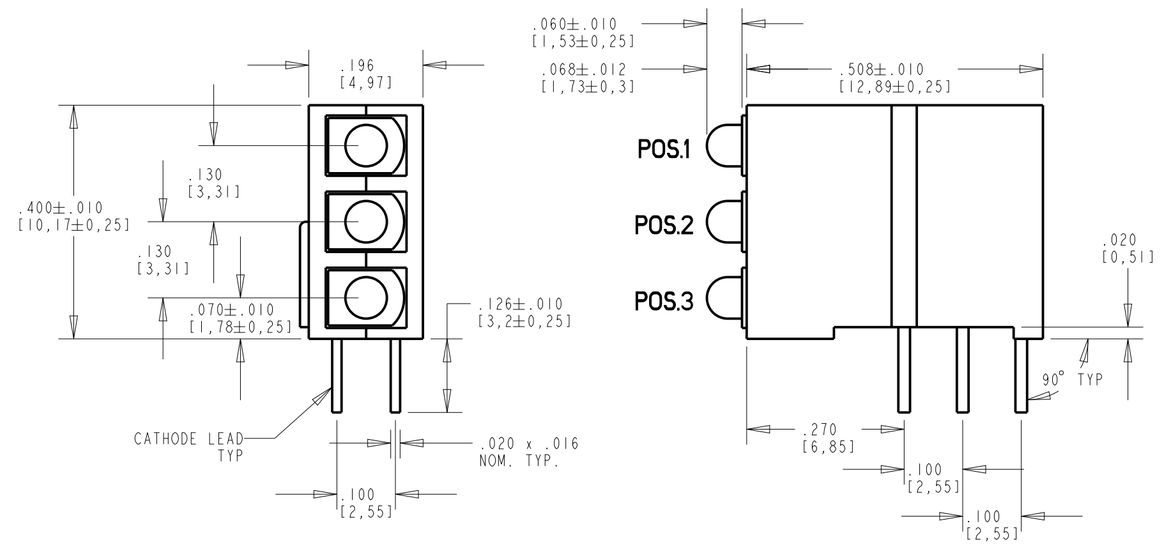

OPERATING CHARACTERISTICS AT 25°C AMBIENT						
CHARACTERISTICS	COLOR	MIN	TYP	MAX	UNITS	TEST CONDITIONS
LUMINOUS INTENSITY	RED	8	15		mcd	I_F = 10 mA
	ORANGE	5	15			
	YELLOW	5	8			
	GREEN	5	10			
	BLUE	380	600			I_F = 20 mA
FORWARD VOLTAGE	RED		2.0	2.5	V	I_F = 20 mA
	ORANGE		2.05	2.5		
	YELLOW		2.1	2.5		
	GREEN		2.2	2.5		
	BLUE		3.5	4.0		
DOMINANT WAVELENGTH	RED		625		nm	
	ORANGE		610			
	YELLOW		588			
	GREEN		568			
	BLUE		470			
PEAK EMISSION WAVELENGTH	RED		627		nm	
	ORANGE		607			
	YELLOW		590			
	GREEN		565			
	BLUE		468			
VIEWING ANGLE 2θ1/2	RED		70		Degree	
	ORANGE		70			
	YELLOW		70			
	GREEN		70			
	BLUE		30			
CAPACITANCE	RED		15		pF	V_F = 0 V, f = 1 MHz
	ORANGE		15			
	YELLOW		20			
	GREEN		15			
	BLUE		100			

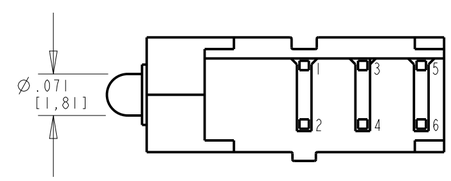

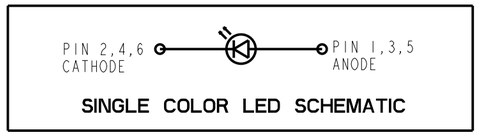

SINGLE COLOR LED SCHEMATIC

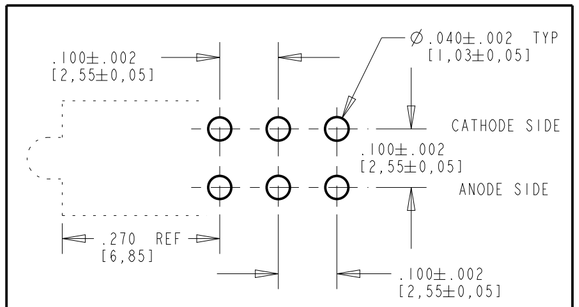

RECOMMENDED PC BOARD HOLE PATTERN

RoHS COMPLIANT 570-0100-XXXF

Part Numbers with the "F" suffix ending are RoHS Compliant.
Example: 570-0100-331F
Bag packaging is marked with "RoHS Compliant" label or the equivalent markings. These parts can be wave soldered, dip soldered or hand soldered for 5 sec at 260°C, 1.6mm from led body. Part specifications are the same, with the exception of the led lead finish which is 100% Tin (Sn) over Nickel (Ni) underplating, on a Fe base material. This drawing document is for both the "Non RoHS" Product and the "RoHS Compliant" product.

ATTENTION:
OBSERVE PRECAUTIONS FOR HANDLING ELECTROSTATIC SENSITIVE DEVICES

THIS DRAWING AND THE CONTENTS HEREIN ARE CONFIDENTIAL AND THE SOLE PROPERTY OF DIALIGHT. REPRODUCTION OF THIS DRAWING OR CONSTRUCTION OF ANY PARTS WITHIN THIS DRAWING ARE FORBIDDEN WITHOUT THE WRITTEN CONSENT OF DIALIGHT.

SCALE: DRAWING SCALE
ALL DIM'S IN: INCHES (MM)
TOLERANCES: UNLESS OTHERWISE SPECIFIED
FRACTIONS: ±1/64
DECIMALS (.XX): ±.02
DECIMALS (.XXX): ±.015
ANGLES: ±3°
FINISH:
FSCM 83330

DRAWING NUMBER: C-16625
REV: N
TITLE: 3X1 CBI BLOCK
MATERIAL

Dialight
1501 ROUTE 34 SOUTH
FARMINGDALE, NJ 07727

SHEET 1 OF 1
FAMILY TABLE:

Компания «ЭлектроПласт» предлагает заключение долгосрочных отношений при поставках импортных электронных компонентов на взаимовыгодных условиях!

Наши преимущества:

- Оперативные поставки широкого спектра электронных компонентов отечественного и импортного производства напрямую от производителей и с крупнейших мировых складов;
- Поставка более 17-ти миллионов наименований электронных компонентов;
- Поставка сложных, дефицитных, либо снятых с производства позиций;
- Оперативные сроки поставки под заказ (от 5 рабочих дней);
- Экспресс доставка в любую точку России;
- Техническая поддержка проекта, помощь в подборе аналогов, поставка прототипов;
- Система менеджмента качества сертифицирована по Международному стандарту ISO 9001;
- Лицензия ФСБ на осуществление работ с использованием сведений, составляющих государственную тайну;
- Поставка специализированных компонентов (Xilinx, Altera, Analog Devices, Intersil, Interpoint, Microsemi, Aeroflex, Peregrine, Syfer, Eurofarad, Texas Instrument, Miteq, Cobham, E2V, MA-COM, Hittite, Mini-Circuits,General Dynamics и др.);

Помимо этого, одним из направлений компании «ЭлектроПласт» является направление «Источники питания». Мы предлагаем Вам помощь Конструкторского отдела:

- Подбор оптимального решения, техническое обоснование при выборе компонента;
- Подбор аналогов;
- Консультации по применению компонента;
- Поставка образцов и прототипов;
- Техническая поддержка проекта;
- Защита от снятия компонента с производства.

Как с нами связаться

Телефон: 8 (812) 309 58 32 (многоканальный)
Факс: 8 (812) 320-02-42
Электронная почта: org@eplast1.ru
Адрес: 198099, г. Санкт-Петербург, ул. Калинина, дом 2, корпус 4, литера А.