UNIPOLE & MULTIPOLE CONNECTORS

LEMO®

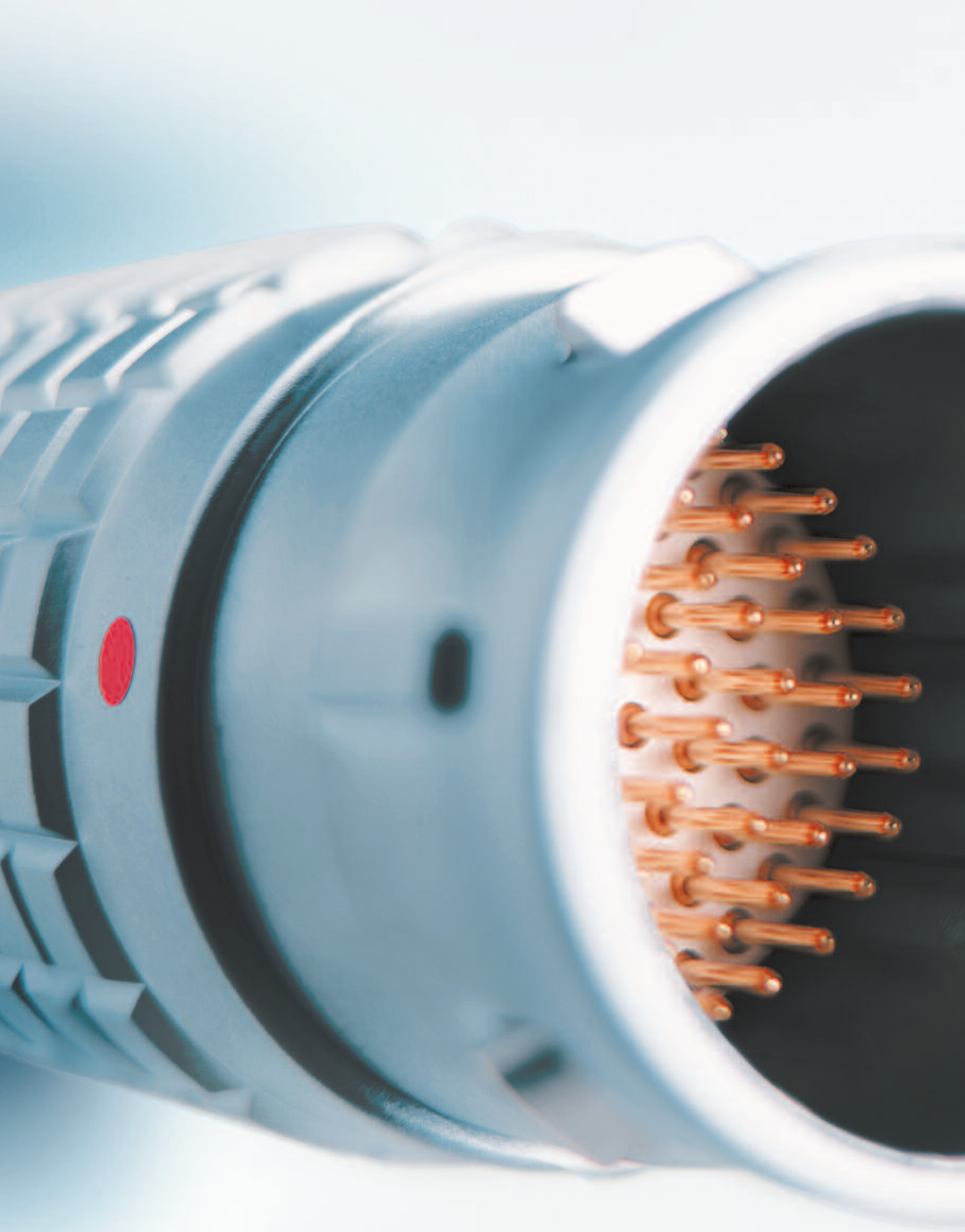

No reproduction or use without express permission of editorial or pictorial content, in any manner.
LEMO reserve the right at all times to modify and improve specifications without any notification.

Printed in Switzerland, 2010 © LEMO SA
Pdf updated, March, 2013

LEMO unipole and multipole connectors

This catalogue gives the complete description of LEMO unipole and multipole type connectors. The LEMO manufacturing programme has been extended to almost 40 series divided into 7 product families with specific mating and environmental characteristics. Each series includes a wide variety of plug, socket, coupler and bridge plug models, available in contact configurations adapted to all round cables, including up to 106 conductors, and a maximum diameter of 30 mm.
Watertight and vacuumtight models are also available. Since LEMO connectors are perfectly screened and designed to guarantee very low resistance to shell electrical continuity, they are particularly adapted to applications where electro-magnetic compatibility (EMC) is important.

Table of Contents

3 steps to select the right connector 3

B Series (indoor, keyed)
- Part Numbering system 11
- Metal Housing models 12
- Elbow socket models 22
- Plastic housing models 24
- Watertight and vacuumtight models 26
- Bridge models 29
- Threaded-latching models 30
- Alignment Key and Polarized Keying System 31

K Series (outdoor, keyed)
- Part Numbering system 33
- Metal Housing models 34
- Watertight and vacuumtight models 41
- Alignment Key and Polarized Keying System 43

B and K Series
- Insert configuration, Housings, Insulators, Contacts 45

S Series (indoor, stepped insert)
- Part Numbering system 57
- Metal Housing models 58
- Elbow socket models 68
- Plastic housing models 70

E Series (outdoor, stepped insert)
- Part Numbering system 75
- Metal Housing models 76
- Watertight and vacuumtight models 82

L Series (outdoor, stepped insert)
- Part Numbering system 85
- Metal Housing models 86
- Vacuumtight models 89
- Alignment Key and Polarized Keying System 90

S, E and L Series
- Insert configuration, Housings, Insulators, Contacts 91

2G Series (indoor, keyed) 110

2C Series (indoor, stepped insert) 116

1D Series (indoor, 4 concentric contacts) 124

Spare parts 130

Accessories 136

Tooling 146

Panel cut-outs 152

PCB drilling pattern 154

Cable assembly (B, K, S and E series) 161

Technical characteristics 171

Precision modular connectors to suit your application

Since it's creation in Switzerland in 1946 the LEMO Group has been recognized as a global leader of circular Push-Pull connectors and connector solutions. Today LEMO and its affiliated companies, REDEL and COELVER, are active in more than 80 countries with the help of over 40 subsidiaries and distributors.

Over 50'000 connectors

The modular design of the LEMO range provides over 50'000 connectors from miniature ø 3 mm to ø 50 mm, capable of handling cable diameters up to 30 mm and for up to 106 contacts.

This vast portfolio enables you to select the ideal connector configuration to suit almost any specific requirement in most markets, including medical devices, test and measurement instruments, machinery, audio video broadcast, telecommunications and military.

LEMO's Push-Pull Self-Latching Connection System

This self-latching system is renowned worldwide for its easy and quick mating and unmating features. It provides absolute security against vibration, shock or pull on the cable, and facilitates operation in a very limited space.

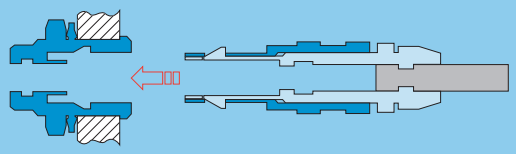

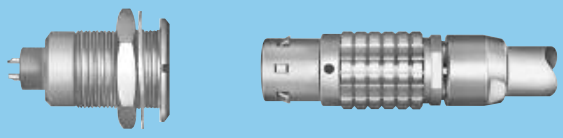

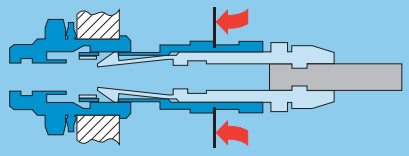

The LEMO self-latching system allows the connector to be mated by simply pushing the plug axially into the socket.

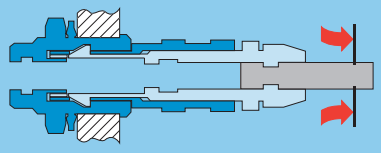

Once firmly latched, connection cannot be broken by pulling on the cable or any other component part other than the outer release sleeve.

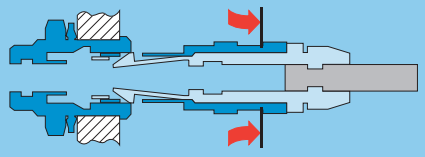

When required, the connector is disengaged by a single axial pull on the outer release sleeve. This first disengages the latches and then withdraws the plug from the socket.

UL Recognition

LEMO connectors are recognized by the Underwriters Laboratories (UL). The approval of the complete system (LEMO connector, cable and your equipment) will be easier because LEMO connectors are approved.

CE marking CE

CE marking CE means that the appliance or equipment bearing it complies with the protection requirements of one or several European safety directives. CE marking CE applies to complete products or equipment, **but not to electromechanical components, such as connectors**.

RoHS

LEMO connector specifications exceed the requirements of the RoHS directive (2011/65/EU) of the European Parliament and the latest amendments. This directive specifies the restrictions of the use of hazardous substances in electrical and electronic equipment marketed in Europe.

3 steps to select the right connector

Step 1: Select connector series

Select the appropriate LEMO connector series according to the environmental parameters that will affect your device or cable such as indoor, outdoor, temperature range, ingress protection of the mated connector and of your device. Use the table shown on page 4.

Part number coding

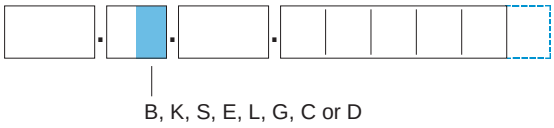

Step 2: Select connector size

Use the section (mm²) or the AWG of your cable wire to select the optimal contact diameter (values vary between solder, crimp or print contact), see page 7.

Use this optimal contact diameter to determine the right connector size as well as the insert configuration, see page 6.

Part number coding

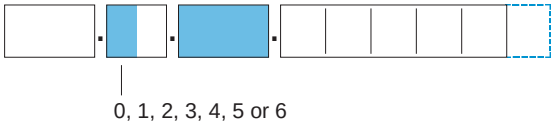

Step 3: Complete the part number

Now that you know the series, as well as the insulator configuration, complete the part numbering system with the help of the following table.

Part number coding

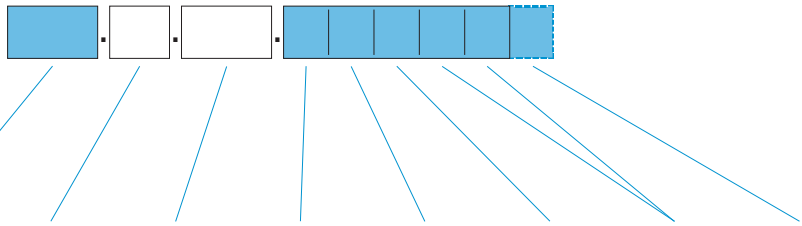

	Model	Series	Insert configuration	Housing material	Insulator material	Contact	Collet	Variant
B Series (indoor, keyed)	12	12	45	50	50	50	52	54
K Series (outdoor, keyed)	34	34	45	50	50	50	53	54
S Series (indoor, stepped insert)	58	58	91	99	99	99	102	107
E Series (outdoor, stepped insert)	76	76	91	99	99	99	105	107
L Series (outdoor, keyed, stepped insert)	86	86	92	99	99	99	106	107
G Series (indoor, keyed)	111	111	112	112	110	113	113	113
C Series (indoor, stepped insert)	117	117	120	120	116	120	121	121
D Series (indoor, 4 concentric contacts)	125	125	127	127	124	127	127	128

Note: Figures in the above table refer to the catalogue pages.

Step 1: Select Connector Series

LEMO unipole and multipole connectors

The standard keyed Series (B, 00, G)
The characteristic feature of these connector series is a keying system which allows higher contact density and prevents all errors in alignment. The various keying alternatives prevent unwanted cross mating of otherwise similar connectors. It is also possible to use crimp contacts to reduce cable assembly time. These connector series, include the 0B to 5B range as well as the 00 multipole and 2G (shortened version of the 2B series), some vacuumtight models are also available.

The watertight keyed Series (K, L)
These series are watertight when mated and assembled to an appropriate cable. They include the 0K to 5K series, available in the same types as the 0B to 5B series, and the 0L to 2L series with keying and hermaphroditic insulator.

The standard Series (S, 00, C, D)
The characteristic feature of these connector series is the hermaphroditic insulator in the multipole version. They include principally the 0S to 6S series, as well as the 00 unipole series, the 2C (shortened version) and the 1D quadrax type (with 4 concentric contacts).

The watertight Series (E)
These series are watertight when mated and assembled to an appropriate cable. They include the 0E to 6E series and are available in the same types as the S series.

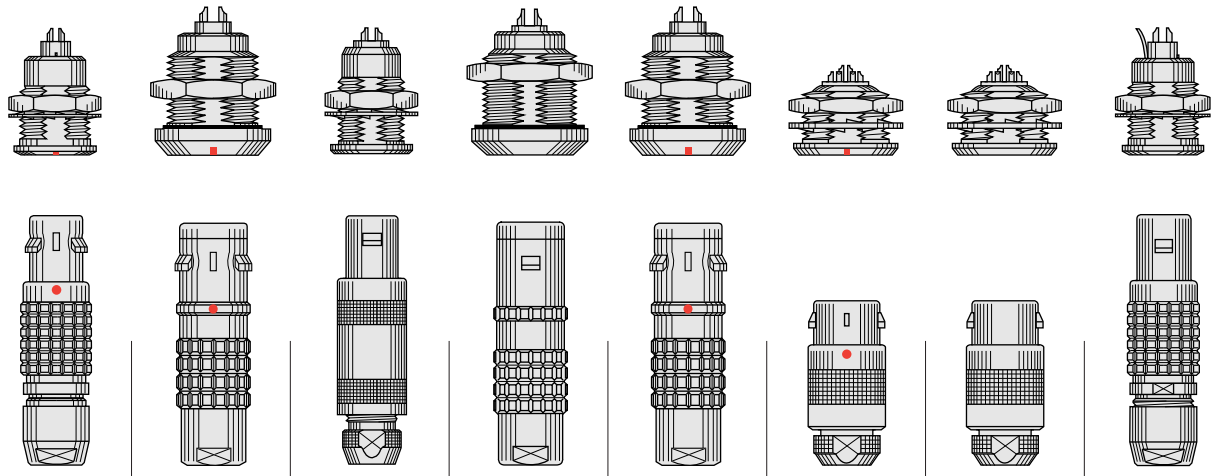

Series	00 multipole B	K	00 unipole S	E	L	G	C	D
Environment	indoor	outdoor or harsh env.	indoor	outdoor or harsh environment		indoor		
Ingress [1] protection	IP50	IP66 to IP68	IP50	IP66 to IP68		IP50		
Ingress [2] protection	IP50 to IP68 vacuumtight	IP66 to IP68 vacuumtight	IP50 to IP68 vacuumtight	IP66 to IP68 vacuumtight		IP50	IP50 to IP68 vacuumtight	IP50
Temperature range	- 55 to 250°C	- 55 to 200°C	- 55 to 250°C	- 55 to 200°C		- 55 to 250°C		- 40 to 120°C
Latching	Push-Pull self-latching							
Shell sizes	7 metal and 4 plastic	6 metal	7 metal and 5 plastic	6 metal		3 metal	4 metal	1 metal
Insulator type	Multipole		Unipole or multipole hermaphroditic		Multipole hermaphroditic	Multipole	Multipole hermaphroditic	Quadrax
Contact type	Solder, crimp or print		Solder, crimp or print		Solder, crimp or print	Solder or print		Solder
Features	13 keyways	9 keyways	Stepped insert		Stepped insert	1 keyway	Stepped insert	4 concentric contacts
Page	9 to 31	32 to 44	55 to 73	74 to 83	84 to 90	109 to 115	116 to 122	123 to 128

Note:
[1] Mated connector. See ingress protection code page 5.
[2] Your device. For selection of connectors for watertight and vacuumtight devices, see page 5.

Definition of Ingress Protection (IP code)

IEC 60529 outlines an international classification system for the sealing effectiveness of enclosures of electrical equipment against the intrusion into the equipment of foreign bodies (i.e. tools, dust, fingers) and moisture. This classification system utilizes the letters «IP» (Ingress Protection) followed by two digits.

Example: IP 50 = IP 5 0

IP letter code
1st digit
2nd digit

Degrees of protection - First digit

The first digit of the IP code indicates the degree to which persons are protected against contact with moving parts and the degree that equipment is protected against solid foreign bodies intruding into an enclosure.

Code	First digit description
0	No special protection
1	Protection from a large part of the body such as hand or from solid objects greater than 50 mm in diameter
2	Protection against objects not greater than 80 mm in length and 12 mm in diameter
3	Protection from entry by tools, wires, etc., with a diameter or thickness greater than 2.5 mm
4	Protection from entry by solid objects with a diameter or thickness greater than 1.0 mm
5	Protection from the amount of dust that would interfere with the operation of the equipment
6	Dust-tight
7	–
8	–

Degrees of protection - Second digit

The second digit indicates the degree of protection of the equipment inside the enclosure against the harmful entry of various forms of moisture (e.g. dripping, spraying, submersion, etc.)

Code	Second digit description
0	No special protection
1	Protection from vertically dripping water
2	Protection from dripping water when tilted up to 15°
3	Protection from sprayed water
4	Protection from splashed water
5	Protection from water projected from a nozzle
6	Protection against heavy seas, or powerful jets of water
7	Protection against temporary immersion
8	Protection against complete continuous submersion in water

Selection of connectors for watertight or vacuumtight devices

LEMO B and S series are rated IP50 only when mated. LEMO E, K and L series are rated IP66 (and over) only when mated. If a device must be watertight or vacuumtight when the connectors are unmated, it is important to select a watertight or vacuumtight socket. You can consider the following two situations:

A) Figure 1 shows a typical outdoor device. To ensure this device retains IP66 or above when connectors are unmated, it is important to choose a watertight socket from B, S, E, K or L series.

B) Figure 2 shows a device which is subjected to pressure difference such as a near vacuum or pressurized gas and must exhibit no leakage. To ensure the device maintains its sealing, the socket is additionally tested for helium leakage (according MIL 1344A).

Fig. 1

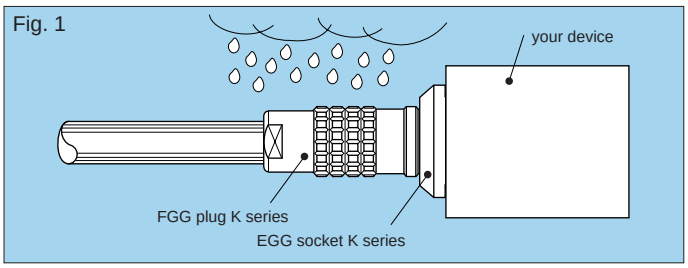

Fig. 2

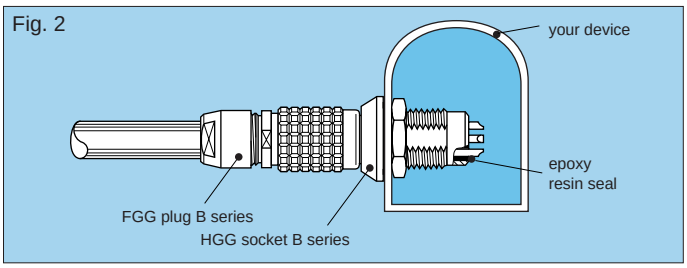

Check temperature range (see section on pages 26, 41, 72, 82 and 89).

Step 2: Select Connector Size

Select the right connector size and insert configuration

To be able to select the right connector size (0 to 6), it is important to define the contact diameter (ø A).
Find out the available contact diameter (ø A) of the LEMO connector depending on the number of contacts required and depending on the rating required (see pages 45 to 49 and 91 to 98).
The following table shows the contact diameter (ø A), or the solder pot diameter (ø C) for the 1D series.

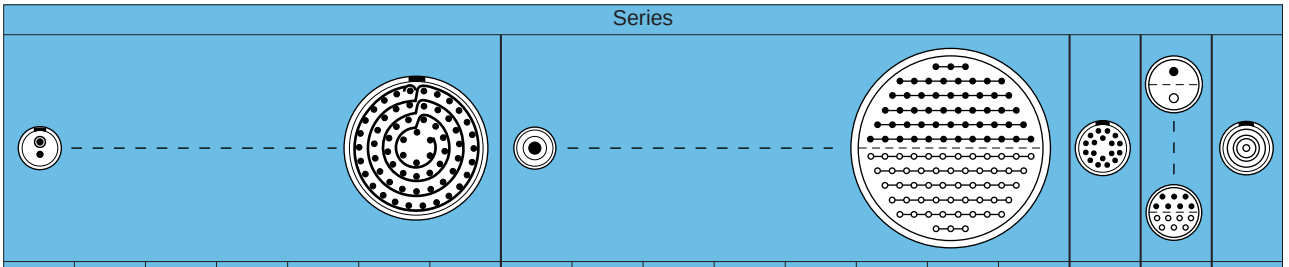

	Number of contacts	Insert configuration	Series																	
			00	0B-0K	1B-1K	2B-2K	3B-3K	4B-4K	5B-5K	00	0S-0E-0L [1]	1S-1E-1L [1]	2S-2E-2L [1]	3S-3E	4S-4E	5S-5E	6S-6E	2G	2C	1D (ø C)
Unipole	1	113								1.3										
Unipole	1	116									1.6									
Unipole	1	120										2.0								
Unipole	1	130										3.0	3.0							
Unipole	1	140											4.0	4.0	4.0					
Unipole	1	160												6.0	6.0					
Unipole	1	112														12.0				
Multipole	2	302	0.5	0.9	1.3	2.0	3.0		6.0		0.9	1.3	1.6	2.0	4.0	6.0			1.6	
Multipole	3	303	0.5	0.9	1.3	1.6	2.0				0.7	0.9	1.3	2.0	3.0	6.0/4.0	6.0		1.3	
Multipole	4	304	0.5	0.7	0.9	1.3	2.0	3.0	4.0		0.7	0.9	1.3	2.0	3.0	4.0	8.0		1.3	0.6
Multipole	5	305		0.7	0.9	1.3	1.6					0.9/0.7	1.3	2.0/1.3	3.0/2.0	4.0/3.0				
Multipole	6	306		0.5	0.7	1.3	1.6	2.0				0.7	1.3	1.3	2.0	3.0			1.3	
Multipole	7	307		0.5	0.7	1.3	1.6	2.0					1.3/0.9	1.3	2.0/1.3					
Multipole	8	308			0.7	0.9	1.3						0.9	1.3	1.3	3.0			0.7	
Multipole	9	309		0.5			1.3/2.0								1.3					
Multipole	10	310			0.5	0.9	1.3	1.6	3.0				0.9	1.3	1.3	2.0			0.7	
Multipole	12	312				0.7	0.9	1.3						0.9	1.3	2.0	4.0/5.0		0.7	
Multipole	13	313												0.9	1.3					
Multipole	14	314			0.5	0.7	0.9		2.0					0.9	1.3	3.0/2.0			0.7	
Multipole	16	316			0.5	0.7	0.9	0.9	2.0					0.9	0.9	2.0	3.0			
Multipole	18	318				0.7	0.9							0.9	0.9	3.0/1.6	4.0	0.7		
Multipole	19	319				0.7														
Multipole	20	320					0.7	0.9	1.6						0.9	1.6	3.0			
Multipole	22	322					0.7								0.9	3.0/1.6				
Multipole	24	324					0.7	0.9							0.9	1.6	3.0			
Multipole	26	326				0.5	0.7													
Multipole	30	330					0.7	0.9	1.3							1.3	2.0			
Multipole	32	332				0.5											2.0			
Multipole	36	336														1.3	2.0 [2]			
Multipole	40	340						0.7	1.3							1.3	2.0			
Multipole	44	344														1.3				
Multipole	48	348						0.7	1.3							1.3	2.0			
Multipole	50	350							0.9											
Multipole	54	354							0.9											
Multipole	60	360															1.6			
Multipole	62	362															1.6			
Multipole	64	364							0.9								1.3			
Multipole	72	372															1.3			
Multipole	106	106															0.9			

Note: [1] L series not available in unipole version. [2] 2.0 is for 6S series, for 6E the values are 1.3 and 5.0.

Verify the fitting to your wire

Verify if the selected contact diameter (ø A) of the LEMO connector fits to your cable wire diameter (AWG number or max. available section).

Contact type	Contact			Conductor						F_r [1] (N)	Note
				Solid		Stranded					
	ø A (mm)	ø C (mm)	Form per fig.	AWG max.	Section max. (mm²)	AWG min.	AWG max.	Section (mm²) min.	Section (mm²) max.		
Solder 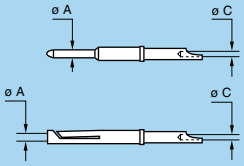	0.5[2]	0.40[2]	–	28	0.09	–	30	–	0.05	–	●
	0.5	0.45	–	28	0.09	–	28	–	0.09	–	
	0.7[3]	0.60[3]	–	24	0.25	–	26	–	0.14	–	
	0.7	0.80[6]	–	22[6]	0.34[6]	–	22[4][6]	–	0.34[6]	–	
	0.9	0.80	–	22	0.34	–	22[4]	–	0.34	–	
	1.3	1.00	–	20	0.50	–	20[4]	–	0.50	–	
	1.6	1.40	–	16	1.00	–	18	–	1.00	–	
	2.0	1.80	–	14	1.50	–	16	–	1.50	–	
	3.0	2.70	–	10	4.00	–	12	–	4.00	–	
	4.0	3.70	–	10	6.00	–	10	–	6.00	–	
	5.0	5.20	–	–	–	–	8	–	10.00	–	
	6.0	5.20	–	–	–	–	8	–	10.00	–	
	8.0	7.00	–	–	–	–	4	–	21.00	–	
	12.0	11.50	–	–	–	–	0	–	50.00	–	
Crimp fig. 1 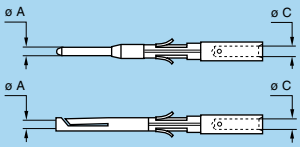	0.5[5]	0.45	1	–	–	32	28	0.035	0.09	12	●
	0.7	0.80	1	–	–	26	22[4]	0.140	0.34	22	●
		0.45	2	–	–	32	28	0.035	0.09		○
	0.9	1.10	1	–	–	24	20	0.250	0.50	30	●
		0.80	2	–	–	26	22[4]	0.140	0.34		○
		0.45	2	–	–	32	28	0.035	0.09		○
	1.3	1.40	1	–	–	20	18	0.500	1.00	40	●
		1.10	2	–	–	24	20	0.250	0.50		○
		0.80	2	–	–	26	22[4]	0.140	0.34		○
fig. 2 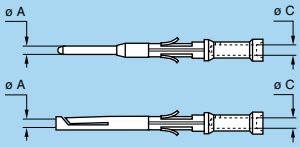	1.6	1.90	1	–	–	18	14[4]	1.000	1.50	50	●
		1.40	2	–	–	22	18	0.340	1.00		○
	2.0	2.40	1	–	–	16	12[4]	1.500	2.50	65	●
		1.90	2	–	–	18	14	1.000	1.50		○
	3.0	2.90	1	–	–	14	10[4]	2.500	4.00	75	●
	4.0	4.00	1	–	–	12	10	4.000	6.00	90	●
Print 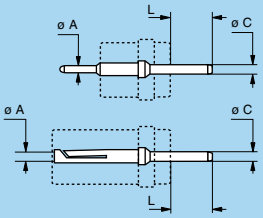	L dimensions and C are detailed in the section on PCB drilling pattern. See page 156 and 159.										●
Print (elbow) 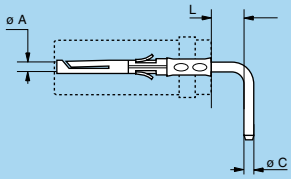	L dimensions and C are detailed in the section on PCB drilling pattern. See page 157 and 160.										●

Note:
1) contact retention force in the insulator (according to IEC 60512-8 test 15 a).
2) for 00 multipole series.
3) for S, E, 2C, 2G and 1D series.
4) for a given AWG, the diameter of some stranded conductor designs is larger than the solder cup diameter. Make sure that the maximum conductor diameter is smaller than ø C.
5) for 00 multipole series or for 0B and 1B series with male contacts.
6) for 0B.304/0B.305 and 0K.304/0K.305 ø C = 1.0 mm, AWG max 20, section max (mm²) 0.50.

Verify the fitting to your cable

Verify if the selected connector size fits to your cable diameter.

Series	Cable diameter range (mm)			
	Collet		Collet for fitting a bend relief	
	min.	max.	min.	max.
00[1]	1.1	3.4	1.1	3.4
0B	1.5	5.5	1.5	5.0
1B	2.2	7.5	2.2	7.0
2B	1.5	9.7	1.5	9.0
3B	4.1	11.7	4.1	11.0
4B	5.1	16.0	5.1	15.0
5B	9.6	25.0	9.6	15.5
0K	1.0	5.0	1.0	5.0
1K	1.3	8.5[3]	1.3	8.5
2K	1.3	10.5[3]	1.3	10.5
3K	2.6	15.0[3]	2.6	15.0
4K	4.6	23.5[3]	4.6	15.0
5K	9.6	23.5	–	–

Series	Cable diameter range (mm)			
	Collet		Collet for fitting a bend relief	
	min.	max.	min.	max.
00[2]	1.1	4.1	1.1	4.1
0S	1.3	6.7	1.3	6.1
1S	1.3	8.5	1.3	8.0
2S	1.3	10.5	1.3	10.0
3S	2.5	13.0	2.5	13.0
4S	4.1	22.0	4.1	13.0
5S	6.1	30.0	–	–
6S	11.1	30.0	–	–
0E	1.0	5.0	1.0	5.0
1E	1.3	8.5[3]	1.3	8.5
2E	1.3	10.5[3]	1.3	10.5
3E	2.6	15.0[3]	2.6	15.0
4E	4.6	23.5[3]	4.6	15.0
5E	9.6	23.5	–	–
6E	13.0	30.0	–	–
0L	1.0	5.0	1.0	5.0
1L	1.3	8.5[3]	1.3	8.5
2L	1.3	10.5[3]	1.3	10.5

Series	Cable diameter range (mm)			
	Collet		Collet for fitting a bend relief	
	min.	max.	min.	max.
2C	2.2	8.1	2.2	8.1
2G	4.5	7.9	4.5	7.9
1D	3.1	7.5	3.1	7.0

Note:
[1] for multipole only.
[2] for unipole only.
[3] for these series the maximum cable diameter require models with oversized cable collet (type K).

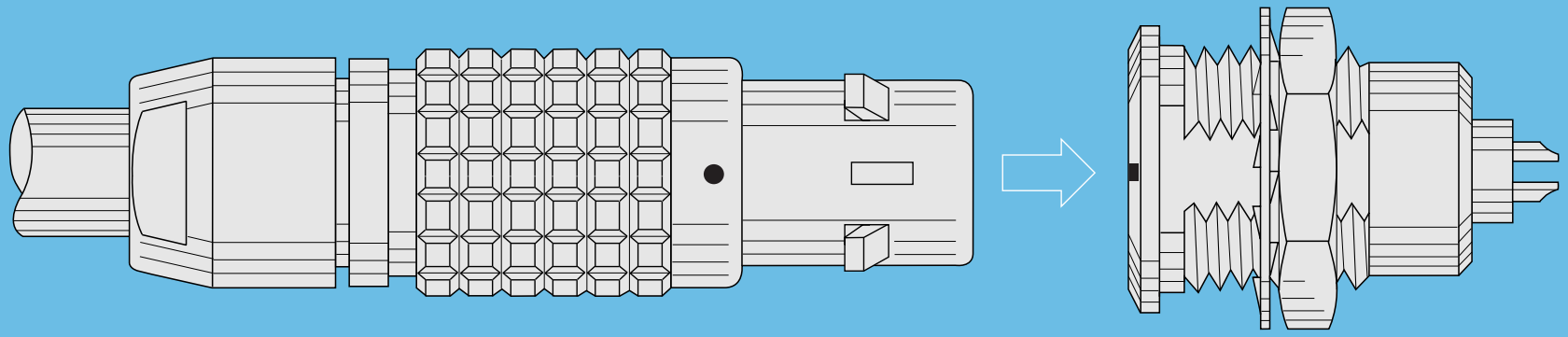

B SERIES

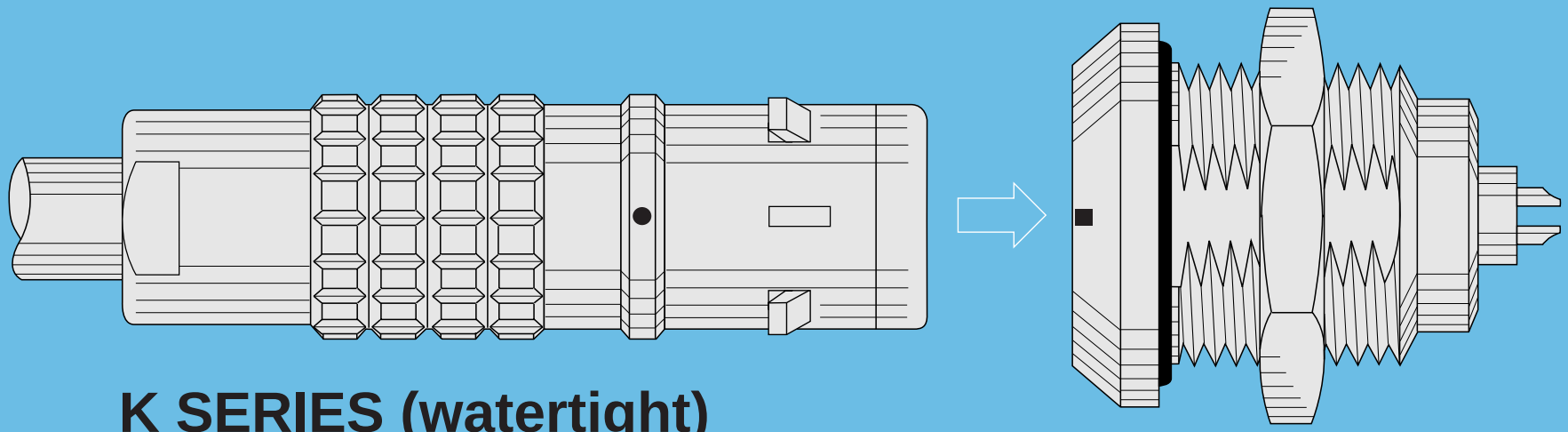

K SERIES (watertight)

B Series

B series connectors provide the following main features:
– security of the Push-Pull self-latching system
– solder, crimp or print contacts (straight or elbow)
– multiple key options to avoid cross mating of similar connectors
– 360° screening for full EMC shielding.
– multipole types 2 to 64 contacts
– high packing density for space savings
– keying system («G» key standard) for connector alignment

Metal housing models (page 12)

Fixed plugs

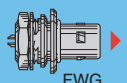
FWG

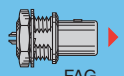
FAG

Elbow plugs

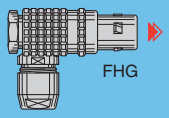
FHG

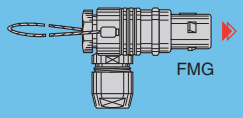
FMG

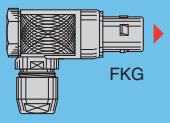
FKG

Straight plugs

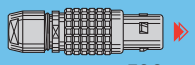
FGG

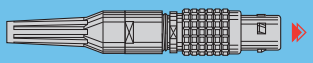
FGG

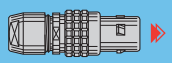
JGG

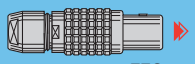
FFG

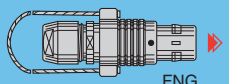
FNG

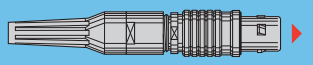
FEG

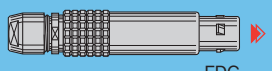
FDG

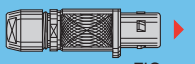
FIG

Fixed sockets

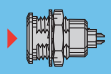
EGG

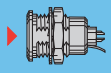
ENG

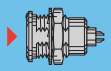
EKG

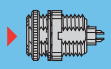
ESG

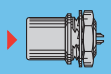
EHG

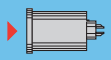
EJG

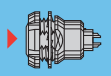
EEG

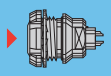
EFG

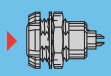
ECG

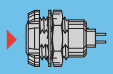
ECG

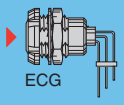
ECG

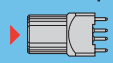
EZG

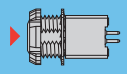
EYG

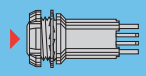
XPF

Fixed coupler

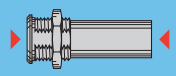
R••

Free sockets

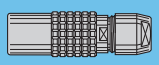
PHG

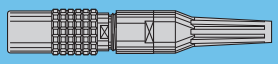
PHG

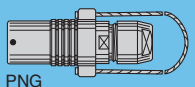
PNG

Fixed sockets

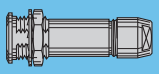
PKG

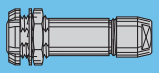
PFG

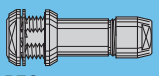
PEG

Elbow socket models (page 22)

Elbow sockets

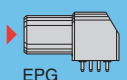
EPG

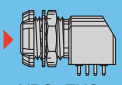
XBG, EXG

Plastic housing models (page 24)

Straight plugs

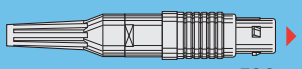
FGG

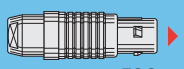
FGG

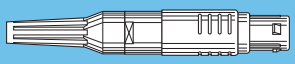
FGY

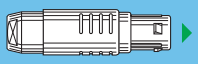
FGY

Fixed sockets

ENG

ENY

Bridge models (page 29)

Plug with two parallel sockets

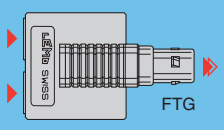

FTG

Bridge plugs

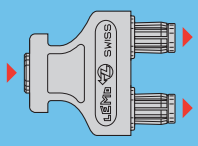

CFF, CRG

Watertight or vacuumtight models (page 26)

Fixed plug

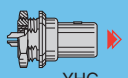
YHG

Fixed sockets

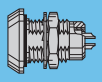
HGG

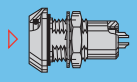
HHG

HEG

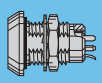
HNG

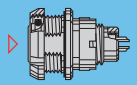
HCG

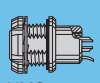
HMG

Fixed coupler

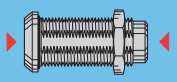
S••

Threaded-latching models (page 30)

Straight plugs

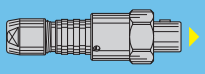
FVG

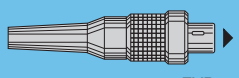
FVB

Fixed socket

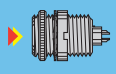
ESG

Elbow socket

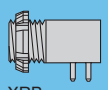
XRB

Part Numbering System

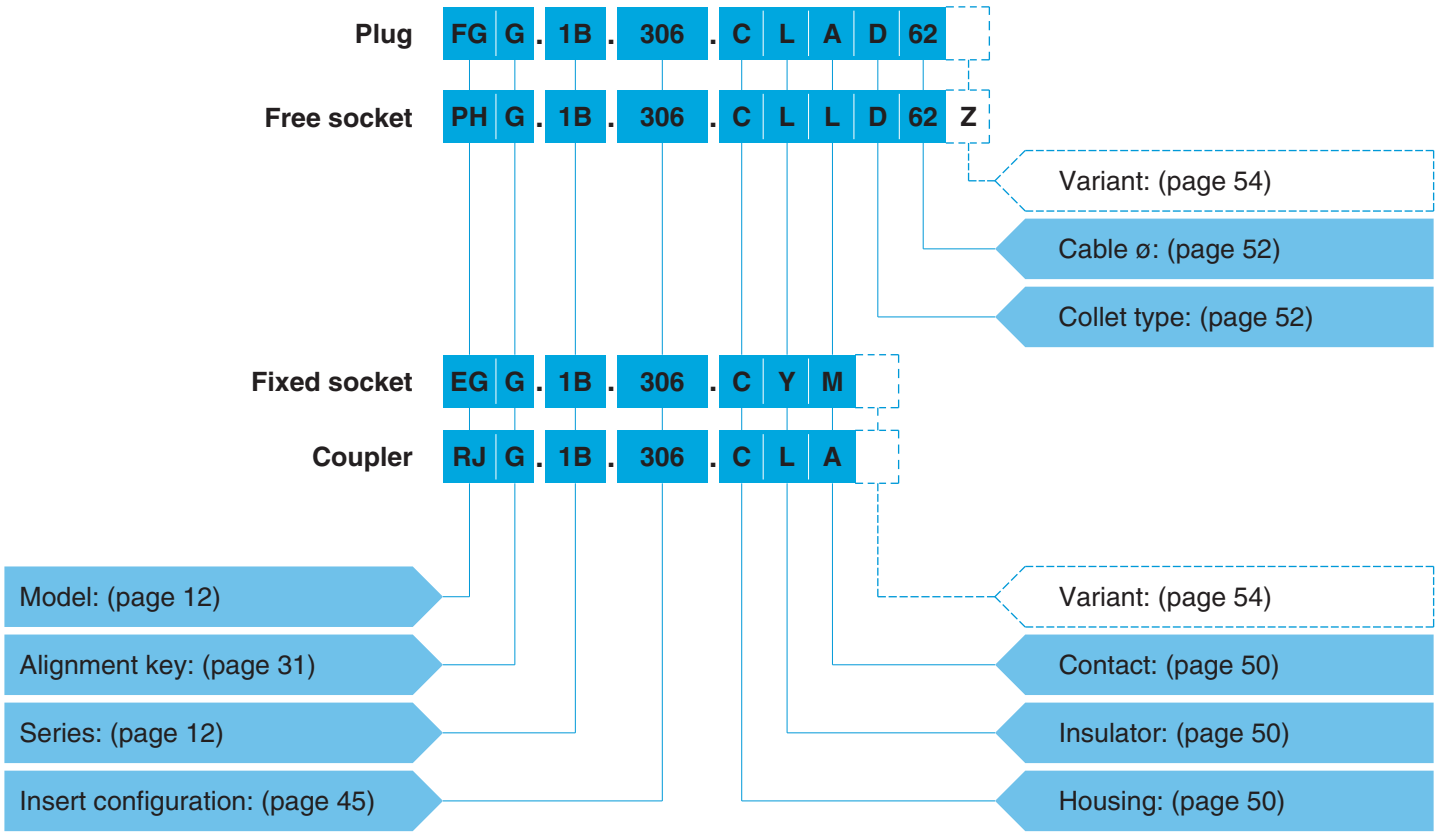

Part Number Example

Straight plug with cable collet:
FGG.1B.306.CLAD62 = straight plug with key (G) and cable collet, 1B series, multipole type with 6 contacts, outer shell in chrome-plated brass, PEEK insulator, male solder contacts, D type collet for 6.0 mm diameter cable.

Free socket:
PHG.1B.306.CLLD62Z = free socket with key (G) and cable collet, 1B series, multipole type with 6 contacts, outer shell in chrome-plated brass, PEEK insulator, female solder contacts, D type collet for 6.0 mm diameter cable and nut for fitting a bend relief.

Fixed socket:
EGG.1B.306.CYM = fixed socket, nut fixing, with key (G), 1B series, multipole type with 6 contacts, outer shell in chrome-plated brass, PEEK extended insulator, female crimp contacts.

Fixed coupler:
RJG.1B.306.CLA = straight fixed coupler with keys (J) at the flange end and key (G) at the other end, 1B series, multipole type with 6 contacts, outer shell in chrome-plated brass, PEEK insulator, male-female contacts.

Part Section Showing Internal Components

Fixed socket

1. outer shell
2. earthing crown
3. retaining ring
4. hexagonal nut
5. locking washer
6. insulator
7. female contact

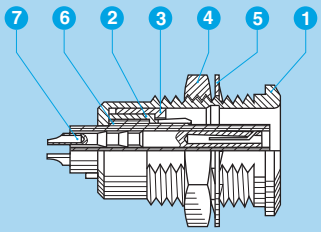

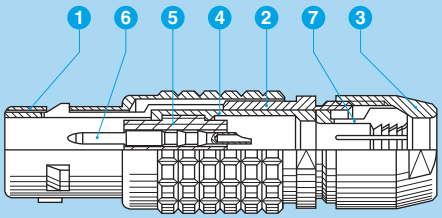

Straight plug

1. outer shell
2. latch sleeve
3. collet nut
4. split insert carrier
5. insulator
6. male contact
7. collet

Metal housing models

Technical Characteristics

Mechanical and Climatical

Characteristics	Value	Standard
Endurance	> 5000 cycles	IEC 60512-5 test 9a
Humidity	up to 95% at 60° C	
Temperature range	- 55° C, +250° C	
Resistance to vibration	10-2000 Hz, 15 g	IEC 60512-4 test 6d
Shock resistance	100 g, 6 ms	IEC 60512-4 test 6c
Salt spray corrosion test	> 144h	IEC 60512-6 test 11f
Protection index (mated)	IP50	IEC 60529
Climatical category	55/175/21	IEC 60068-1

Electrical

Characteristics		Value	Standard
Shielding efficiency	at 10 MHz	> 75 dB	IEC 60169-1-3
	at 1 GHz	> 40 dB	IEC 60169-1-3

Note:
the various tests have been carried out with FGG and EGG connector pairs, with chrome-plated brass shell and PEEK insulator.
Detailed electrical characteristics, as well as materials and treatment are presented in the chapter Technical Characteristics on page 171.

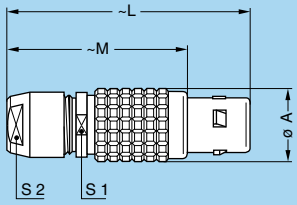

FGG Straight plug, key (G) or keys (A…M and R), cable collet

Reference		Dimensions (mm)				
Model	Series	A	L	M	S1	S2
FGG	00[1)]	6.4	28.5	20.5	5.5	5
FGG	0B	9.5	36.0	26.0	8.0	7
FGG	1B	12.0	43.0	32.0	10.0	9
FGG	2B	15.0	50.0	38.0	13.0	12
FGG	3B	18.0	58.0	43.0	15.0	14
FGG	4B	25.0	75.0	57.0	21.0	20
FGG	5B	35.0	103.0	78.0	31.0	30

M1 Cable assembly (page 161)

Note: 1) the surface design of the 00 series is different.

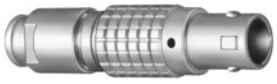

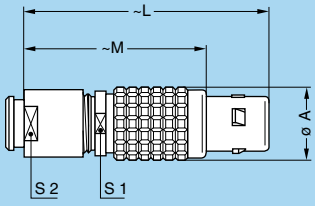

FGG Straight plug, key (G) or keys (A…M), cable collet and nut for fitting a bend relief [2)]

Reference		Dimensions (mm)				
Model	Series	A	L	M	S1	S2
FGG	00[1)]	6.4	28.7	20.7	5.5	6
FGG	0B	9.5	35.0	25.0	8.0	7
FGG	1B	12.0	42.0	31.0	10.0	9
FGG	2B	15.0	49.0	37.0	13.0	12
FGG	3B	18.0	56.5	41.5	15.0	15
FGG	4B	25.0	71.0	53.0	21.0	20

M1 Cable assembly (page 161)

Note: 1) the surface design of the 00 series is different.
2) to order, add a «Z» at the end of the reference.

The bend relief must be ordered separately (see page 141).

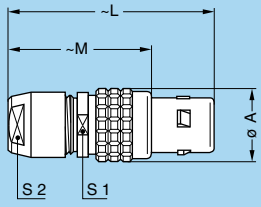

JGG Straight plug, short version, key (G), cable collet

Reference		Dimensions (mm)				
Model	Series	A	L	M	S1	S2
JGG	0B	9.5	32.0	22.0	8.0	7

M4 Cable assembly (page 161)

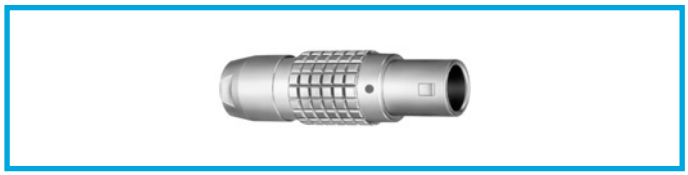

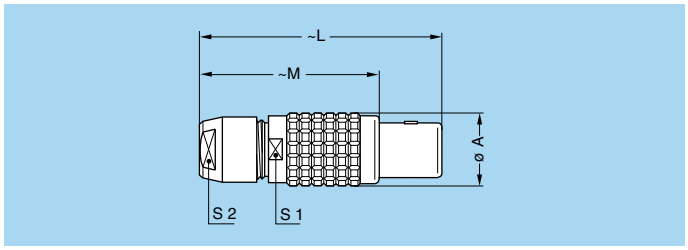

FFG Straight plug, non-latching, key (G) or keys (A…M), cable collet

Reference		Dimensions (mm)				
Model	Series	A	L	M	S1	S2
FFG	0B	9.5	36	26	8	7
FFG	1B	12.0	43	32	10	9
FFG	2B	15.0	50	38	13	12
FFG	3B	18.0	58	43	15	14
FFG	4B	25.0	75	57	21	20

M1 Cable assembly (page 161)

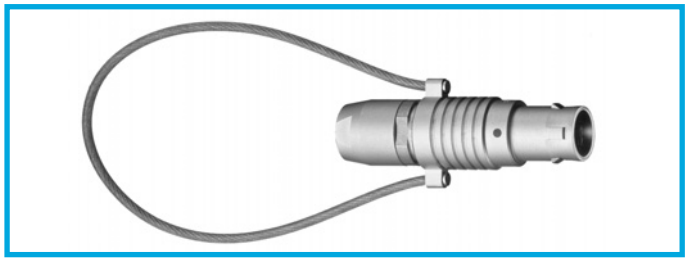

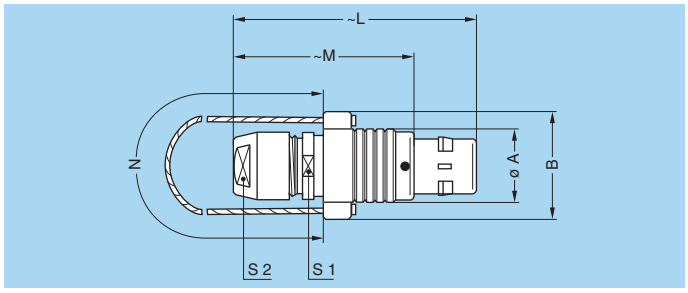

FNG Straight plug, key (G) or keys (A…M and R), cable collet and lanyard release

Reference		Dimensions (mm)						
Model	Series	A	B	L	M	N	S1	S2
FNG	0B	9.5	15.5	36.0	26.0	140	8	7
FNG	1B	12.0	18.0	43.0	32.0	140	10	9
FNG	2B	15.0	21.0	49.0	37.0	160	13	12
FNG	3B	18.0	25.0	58.0	43.0	190	15	14
FNG	4B	25.0	32.0	75.0	57.0	230	21	20
FNG	5B	35.0	42.0	103.0	78.0	300	31	30

M1 Cable assembly (page 161)

Note: cable material: stainless steel with Polyamide sheath.

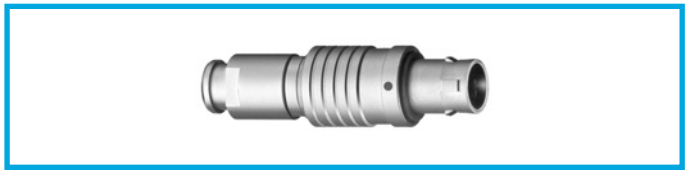

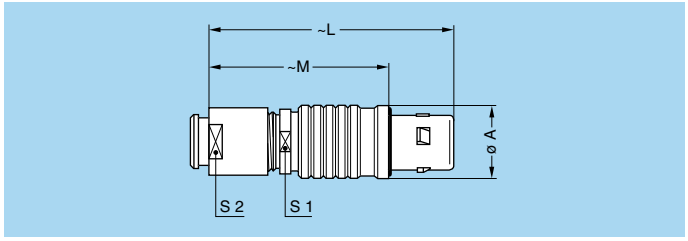

FEG Straight plug, key (G) or keys (A…L), cable collet, front seal and nut for fitting a bend relief [1] (IP 54 protection index when mated)

Reference		Dimensions (mm)				
Model	Series	A	L	M	S1	S2
FEG	0B	11.0	35.0	25.0	8	7
FEG	1B	13.5	42.0	33.0	10	9
FEG	2B	16.5	48.0	36.0	13	12
FEG	3B	19.0	56.5	41.5	15	15

M1 Cable assembly (page 161)

Note: [1] to order, add a «Z» at the end of the reference.
The bend relief must be ordered separately (see page 141).

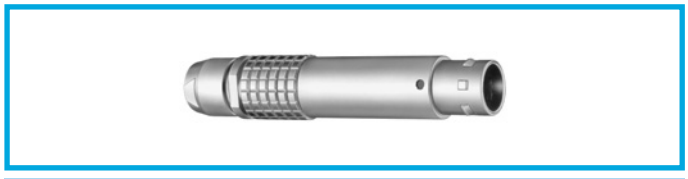

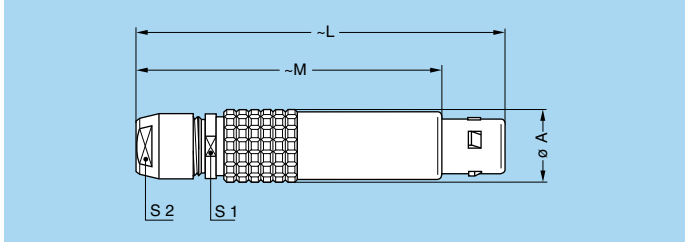

FDG Straight plug, long version, key (G) or keys (A…L), cable collet

Reference		Dimensions (mm)				
Model	Series	A	L	M	S1	S2
FDG	1B	12	68	57	10	9
FDG	2B	15	79	67	13	12

M2 Cable assembly (page 162)

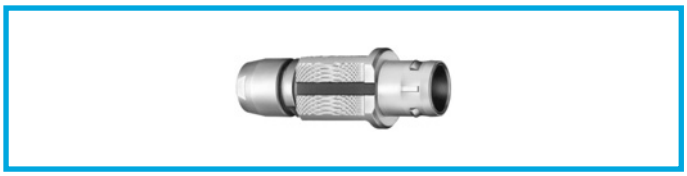

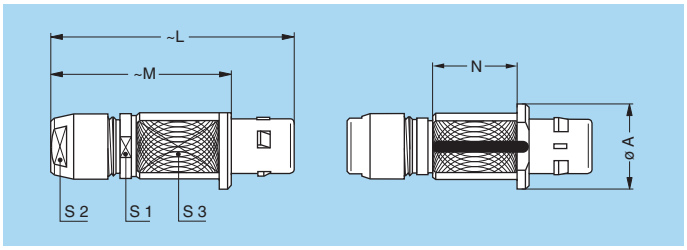

FIG Straight plug for remote handling, key (G) or keys (A…L and R), special alignment mark, knurled handling surface, cable collet

Reference		Dimensions (mm)						
Model	Series	A	L	M	N	S1	S2	S3
FIG	2B	20	49	37	17.5	13	12	15
FIG	3B	22	58	43	21.5	15	14	18
FIG	4B	30	75	57	28.5	21	20	25
FIG	5B	40	103	78	41.0	31	30	35

M1 Cable assembly (page 161)

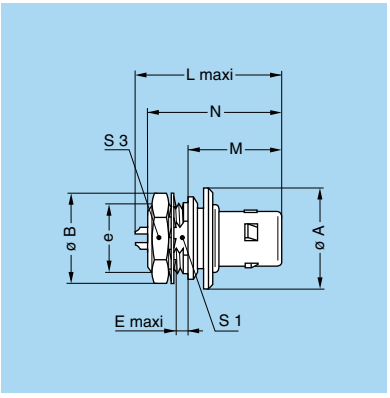

FWG Fixed plug, nut fixing, key (G) or keys (A…L)

Reference		Dimensions (mm)								
Model	Series	A	B	e	E	L	M	N[1)]	S1	S3
FWG	0B	14.0	12.4	M9x0.6	1.8	22.5	14.5	19.5	8.2	11
FWG	1B	18.0	15.8	M12x1.0	2.9	24.9	17.0	24.8	10.5	14
FWG	2B	19.5	19.2	M15x1.0	4.1	28.6	18.0	27.3	13.5	17
FWG	3B	25.0	25.0	M18x1.0	4.2	32.1	23.0	31.5	16.5	22

P9 Panel cut-out (page 152)

Note: [1)] maximum length with crimp contacts

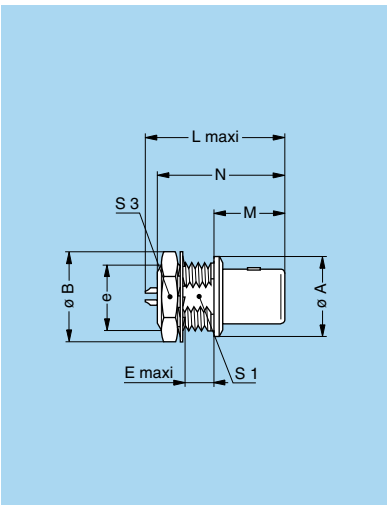

FAG Fixed plug, non-latching, nut fixing, key (G) or keys (A…M and R)

Reference		Dimensions (mm)								
Model	Series	A	B	e	E	L	M	N[1)]	S1	S3
FAG	00	8	10.2	M7x0.5	2.9	18.1	9.0	15.0	6.3	9
FAG	0B	10	12.4	M9x0.6	4.2	20.8	11.5	18.9	8.2	11
FAG	1B	14	15.8	M12x1.0	5.4	25.2	12.5	21.6	10.5	14
FAG	2B	18	19.2	M15x1.0	6.0	28.7	13.8	23.9	13.5	17
FAG	3B	22	25.0	M18x1.0	5.8	32.1	17.0	30.2	16.5	22
FAG	4B	29	34.0	M25x1.0	6.8	37.1	20.5	34.7	23.5	30
FAG	5B	40	40.0	M35x1.0	6.8	47.1	28.0	42.8	33.5	–

P1 Panel cut-out (page 152)

Note: [1)] maximum length with crimp contacts. The 5B series is delivered without locking washer or tapered washer and with a round nut.

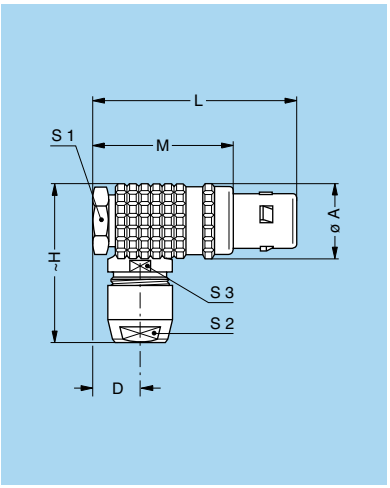

FHG Elbow (90°) plug, key (G) or keys (A…M and R), cable collet

Reference		Dimensions (mm)							
Model	Series	A	D	H	L	M	S1	S2	S3
FHG	00[1)]	7.7	5.2	18.0	24.5	16.5	7	5	5.5
FHG	0B	11.0	6.5	26.0	30.0	21.6	10	7	8.0
FHG	1B	13.5	8.0	30.5	36.0	25.0	11	9	10.0
FHG	2B	16.5	9.0	34.0	41.5	29.5	14	12	13.0
FHG	3B	19.0	10.0	37.0	50.0	35.0	17	14	15.0
FHG	4B	26.0	15.0	52.0	67.0	49.0	22	20	21.0
FHG	5B	36.0	21.0	74.0	90.0	65.0	32	30	31.0

M3 Cable assembly (page 161)

Note: [1)] the surface design of the 00 series is different.

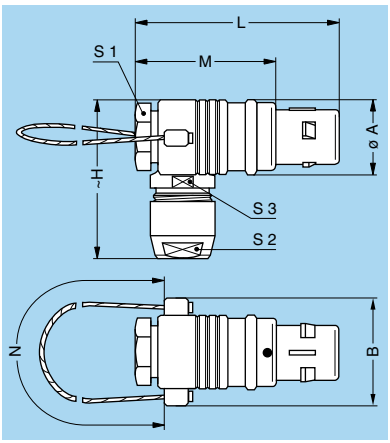

FMG Elbow (90°) plug, key (G) or keys (A…M), cable collet and lanyard release, long key [1)]

Reference		Dimensions (mm)								
Model	Series	A	B	H	L	M	N	S1	S2	S3
FMG	0B	11	17	26	31.6	21.6	140	10	7	8
FMG	3B	19	26	39	50.0	35.0	190	17	14	15

M3 Cable assembly (page 161)

Note: [1)] long key: only in 0B series and with key (G).
Cable material: stainless steel with Polyamide sheath.

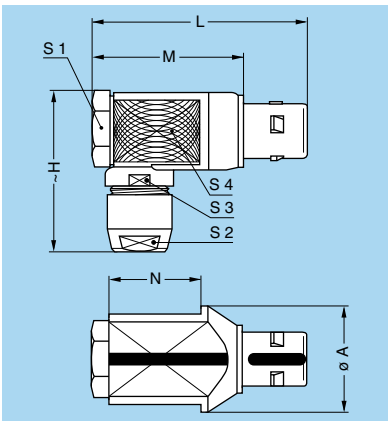

FKG Elbow (90°) plug for remote handling, key (G) or keys (A…L), special alignment mark, knurled handling surface, cable collet

Reference		Dimensions (mm)								
Model	Series	A	H	L	M	N	S1	S2	S3	S4
FKG	3B	25	37.0	50.0	35.0	21.0	17	14	15	21
FKG	4B	32	52.0	67.0	49.0	28.5	22	20	21	26
FKG	5B	46	74.2	89.5	64.5	40.0	32	30	31	38

M3 Cable assembly (page 161)

Note: dimension D is the same as for the FHG model.

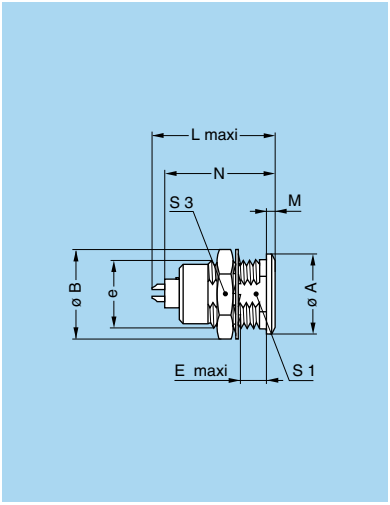

EGG Fixed socket, nut fixing, key (G) or keys (A…M and R)

Reference		Dimensions (mm)								
Model	Series	A	B	e	E	L	M	N[1)]	S1	S3
EGG	00	8	10.2	M7x0.5	6.0	15.5	1.0	13.7	6.3	9
EGG	0B	10	12.4	M9x0.6	7.0	20.7	1.2	19.1	8.2	11
EGG	1B	14	15.8	M12x1.0	7.5	23.0	1.5	21.1	10.5	14
EGG	2B	18	19.2	M15x1.0	8.5	26.7	1.8	24.6	13.5	17
EGG	3B	22	25.0	M18x1.0	11.5	30.7	2.0	28.1	16.5	22
EGG	4B	28	34.0	M25x1.0	12.0	35.7	2.5	34.1	23.5	30
EGG	5B	40	40.0	M35x1.0	11.0	43.5	3.0	39.6	33.5	–

P1 Panel cut-out (page 152)

Note: [1)] maximum length with crimp contacts.
The 5B series is delivered with a tapered washer and a round nut.

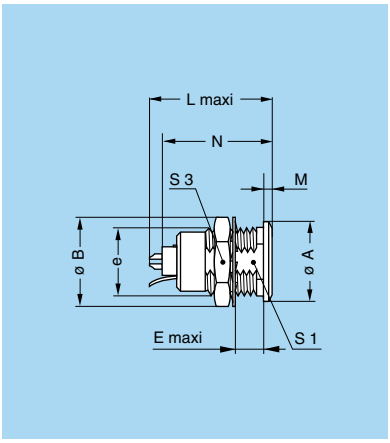

ENG Fixed socket with earthing tag, nut fixing, key (G) or keys (A…M)

Reference		Dimensions (mm)								
Model	Series	A	B	e	E	L	M	N[1)]	S1	S3
ENG	0B	10	12.4	M9x0.6	7.0	20.7	1.2	19.1	8.2	11
ENG	1B[2)]	14	15.8	M12x1.0	7.5	23.0	1.5	21.1	10.5	14
ENG	2B	18	19.2	M15x1.0	8.5	26.7	1.8	24.6	13.5	17
ENG	3B	22	25.0	M18x1.0	11.5	30.7	2.0	28.1	16.5	22
ENG	4B	28	34.0	M25x1.0	12.0	35.7	2.5	34.1	23.5	30

P1 Panel cut-out (page 152)

Note: [1)] maximum length with crimp contacts.
[2)] for the 1B series the earthing tag is on the same side of the key.

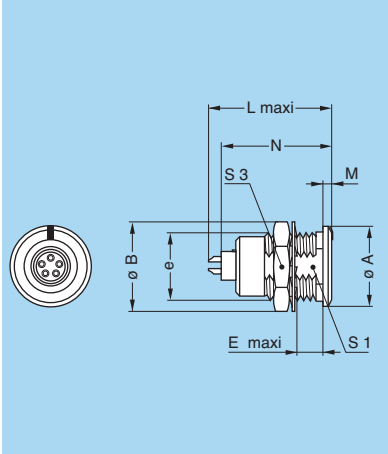

EKG Fixed socket, nut fixing, key (G) or keys (A…L and R), special alignment mark on the front

Reference		Dimensions (mm)								
Model	Series	A	B	e	E	L	M	N[1)]	S1	S3
EKG	2B	18	19.2	M15x1.0	8.5	26.7	1.8	24.6	13.5	17
EKG	3B	22	25.0	M18x1.0	11.5	30.7	2.0	28.1	16.5	22
EKG	4B	28	34.0	M25x1.0	12.0	35.7	2.5	34.1	23.5	30
EKG	5B	40	40.0	M35x1.0	11.0	43.5	3.0	39.6	33.5	–

P1 Panel cut-out (page 152)

Note: [1)] maximum length with crimp contacts.
The 5B series is delivered with a tapered washer and a round nut.

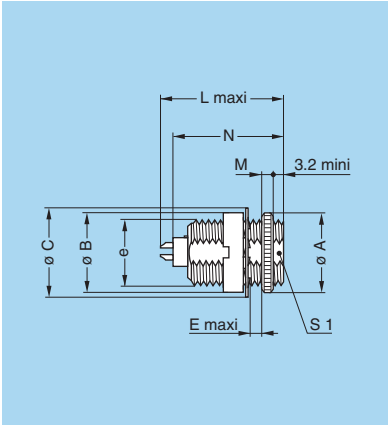

ESG Fixed socket with two round nuts, key (G) or keys (A…L), long threaded shell (back panel mounting)

Reference		Dimensions (mm)							
Model	Series	A	B	C	e	E	L	M	N[1)]	S1
ESG	00	9	9	9.5	M7x0.5	3.2	15.5	2	13.7	–
ESG	1B	14	14	16.0	M12x1.0	8.0	23.0	2	21.1	10.5

P1 Panel cut-out 1B series (page 152)

P2 Panel cut-out 00 series (page 152)

Note: [1)] maximum length with crimp contacts.

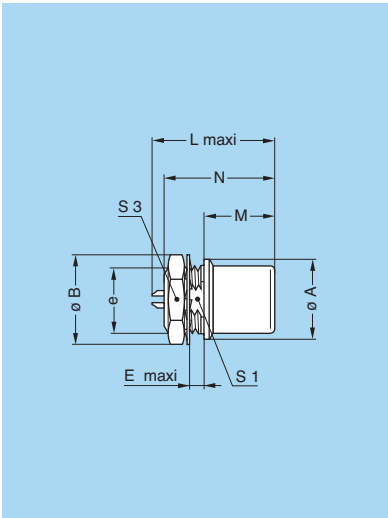

EHG Fixed socket, nut fixing, key (G) or keys (A…M and R), and protruding shell

Reference		Dimensions (mm)								
Model	Series	A	B	e	E	L	M	N[1)]	S1	S3
EHG	00	8.0	10.2	M7x0.5	2.0	15.5	8.5	13.7	6.3	9
EHG	0B	10.0	12.4	M9x0.6	2.0	19.5	12.5	19.1	8.2	11
EHG	1B	14.0	15.8	M12x1.0	4.0	21.7	12.0	21.1	10.5	14
EHG	2B	18.0	19.2	M15x1.0	5.1	22.7	12.5	24.6	13.5	17
EHG	3B	22.0	25.0	M18x1.0	7.1	30.7	13.5	30.3	16.5	22
EHG	5B	40.0	40.0	M35x1.0	2.5	43.5	28.0	38.5	33.5	–

P1 Panel cut-out (page 152)

Note: [1)] maximum length with crimp contacts.
The 5B series is delivered without locking washer or tapered washer and with a round nut.

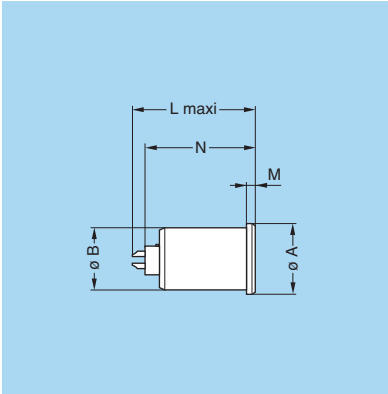

EJG Fixed socket, press or adhesive fit, key (G) or keys (A…M)

Reference		Dimensions (mm)				
Model	Series	A	B	L	M	N[1)]
EJG	0B	9.2	8.35	20.7	1.5	19.1
EJG	1B	12.5	11.20	23.0	1.5	21.1
EJG	2B	16.5	14.00	26.7	1.5	24.6

P5 Panel cut-out (page 152)

Note: [1)] maximum length with crimp contacts.

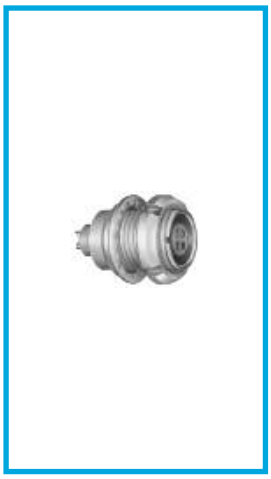

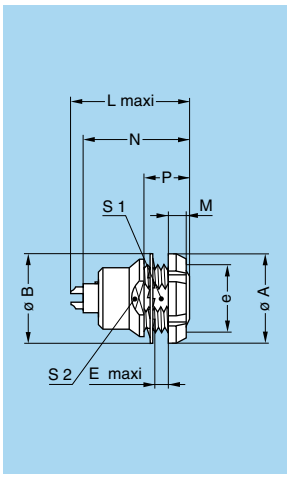

EEG Fixed socket, nut fixing, key (G) or keys (A…M and R) (back panel mounting)

Reference		Dimensions (mm)									
Model	Series	A	B	e	E	L	M	N[1)]	P	S1	S2
EEG	00	10	9.5	M7x0.5	2.3	15.5	2.5	13.7	6.0	6.3	7.5
EEG	0B	12	12.5	M9x0.6	2.4	20.7	2.5	19.1	6.3	8.2	9.0
EEG	1B	16	16.0	M12x1.0	6.5	23.0	3.5	21.1	11.0	10.5	13.0
EEG	2B	20	20.0	M15x1.0	3.0	26.7	3.5	24.6	9.0	13.5	15.0
EEG	3B	24	25.0	M18x1.0	5.0	30.7	4.5	28.1	12.0	16.5	20.0
EEG	5B	41	40.0	M35x1.0	13.5	43.5	5.0	39.6	19.5	33.5	38.0

P1 Panel cut-out (page 152)

Note: 1) maximum length with crimp contacts. The 3B and 5B series are delivered with a conical nut. The 5B series is delivered without locking washer or tapered washer.

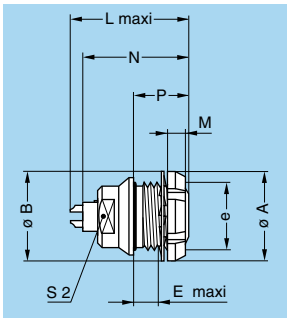

EFG Fixed socket, nut fixing, key (G) or keys (A…M), with two flats on the shell and O-ring (back panel mounting)

Reference		Dimensions (mm)								
Model	Series	A	B	e	E	L	M	N[1)]	P	S2
EFG	0B	12	12.5	M9x0.6	5.5	20.7	2.5	19.1	9	8

P2 Panel cut-out (page 152)

Note: 1) maximum length with crimp contacts.

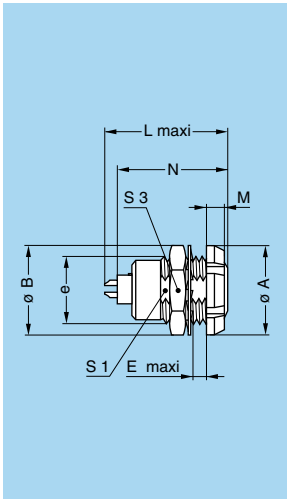

ECG Fixed socket with two nuts, key (G) or keys (A…M and R) (back panel mounting)

Reference		Dimensions (mm)								
Model	Series	A	B	e	E	L	M	N[1)]	S1	S3
ECG	00	10	10.2	M7x0.5	4.3	13.7	2.5	13.7	6.3	9
ECG	0B	12	12.4	M9x0.6	5.5	20.7	2.5	19.1	8.2	11
ECG	1B	16	15.8	M12x1.0	6.0	23.0	3.5	21.1	10.5	14
ECG	2B	20	19.2	M15x1.0	6.5	26.7	3.5	24.6	13.5	17
ECG	3B	24	25.0	M18x1.0	9.0	30.7	4.5	28.1	16.5	22
ECG	4B	30	34.0	M25x1.0	10.0	35.7	4.5	32.6	23.5	30
ECG	5B	41	40.0	M35x1.0	9.0	43.5	5.0	39.6	33.5	–

P1 Panel cut-out (page 152)

Note: 1) maximum length with crimp contacts. The 3B, 4B and 5B series are delivered with a conical nut. The 5B series is delivered with a tapered washer and a round nut.

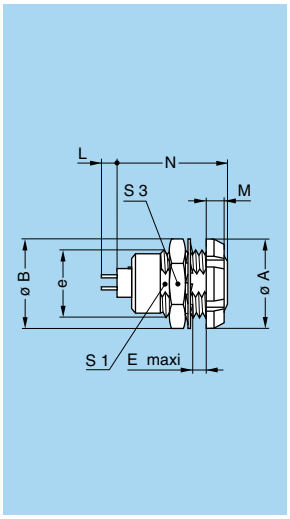

ECG Fixed socket with two nuts, key (G) or keys (A…F and R) and straight contact for printed circuit (back panel mounting)

Reference		Dimensions (mm)							
Model	Series	A	B	e	E	M	N	S1	S3
ECG	00	10	10.2	M7x0.5	4.3	2.5	13.7	6.3	9
ECG	0B	12	12.4	M9x0.6	5.5	2.5	16.1	8.2	11
ECG	1B	16	15.8	M12x1.0	6.0	3.5	19.8	10.5	14
ECG	2B	20	19.2	M15x1.0	6.5	3.5	21.8	13.5	17
ECG	3B	24	25.0	M18x1.0	9.0	4.5	25.8	16.5	22
ECG	4B	30	34.0	M25x1.0	10.0	4.5	29.8	23.5	30
ECG	5B	41	40.0	M35x1.0	9.0	5.0	36.8	33.5	–

P1 Panel cut-out (page 152)

P15 PCB drilling pattern (page 154)

Note: this contact type is available for E●● socket models fitted with female contacts.
Length «L» depends on the number of contacts, see table on page 156.
The 5B series is delivered with a tapered washer and a round nut.
The 3B, 4B and 5B series are delivered with a conical nut.

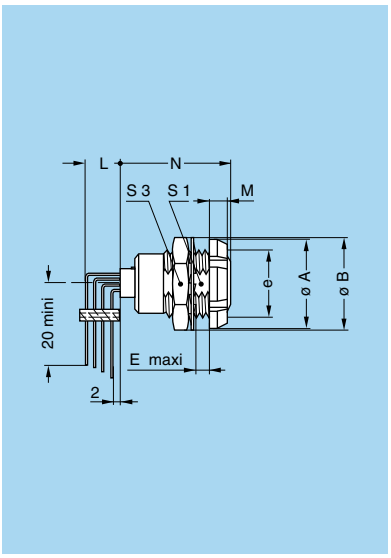

ECG Fixed socket with two nuts, key (G) or keys (A…F) with elbow (90°) contact for printed circuit (back panel mounting)

Reference		Dimensions (mm)							
Model	Series	A	B	e	E	M	N max	S1	S3
ECG	0B	12	12.4	M9x0.6	5.5	2.5	18.3	8.2	11
ECG	1B	16	15.8	M12x1.0	6.0	3.5	20.3	10.5	14
ECG	2B	20	19.2	M15x1.0	6.5	3.5	22.3	13.5	17
ECG	3B	24	25.0	M18x1.0	9.0	4.5	25.8	16.5	22

P1 Panel cut-out (page 152)

P17 PCB drilling pattern (page 157)

Note: this female contact type is available for all back panel mounting socket models. Length «L» depends on the number of contacts, see PCB drilling pattern on page 157.
For male contacts, sockets are available upon request, with J, K or L keys.
The 3B series is delivered with a conical nut.

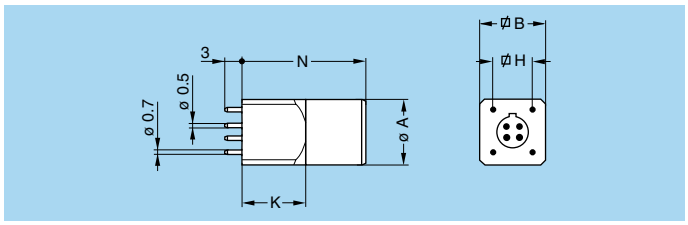

EZG Straight socket for printed circuit, key (G) or keys (A, B)

Reference		Dimensions (mm)				
Model	Series	A	B	H	K	N
EZG	00	6.8	7	5.08	7	14

P15+P16 PCB drilling pattern (pages 154 and 156)

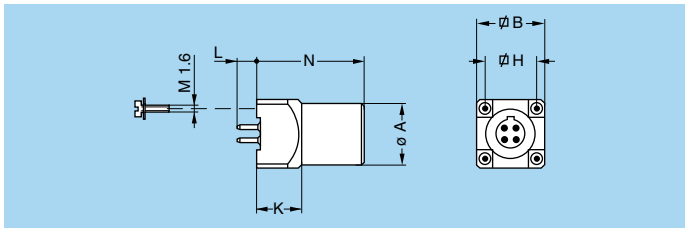

EZG Straight socket for printed circuit, key (G) or keys (A…F)

Reference		Dimensions (mm)				
Model	Series	A	B	H	K	N
EZG	0B	9	10	7.62	8	15.0
EZG	1B	11	12	7.62	8	19.0
EZG	2B	14	15	10.16	9	22.5

P15+P16 PCB drilling pattern (pages 154 and 156)

Note:
Length «L» depends on the number of contacts, see table on page 156.

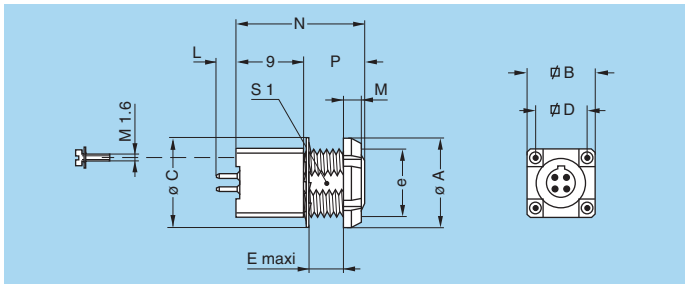

EYG Fixed socket for printed circuit, nut fixing, key (G) or keys (A…F) (back panel mounting)

Reference		Dimensions (mm)									
Model	Series	A	B	C	D	e	E	M	N	P	S1
EYG	0B	12	10	12.5	7.62	M9x0.6	2.6	2.5	15.0	6.0	8.2
EYG	1B	14	12	16.0	7.62	M11x0.5	5.0	3.5	19.0	10.0	–
EYG	2B	20	15	19.5	10.16	M15x1.0	7.5	3.5	22.5	13.5	13.5

P1 Panel cut-out 0B and 2B series (page 152)

P10 Panel cut-out 1B series (page 152)

P15+P16 PCB drilling pattern (pages 154 and 156)

Note: Length «L» depends on the number of contacts, see page 156.

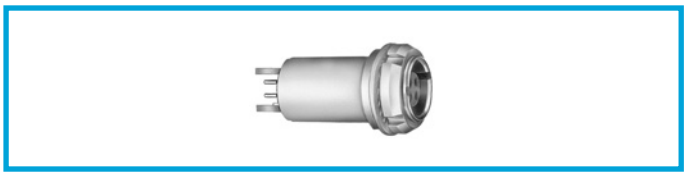

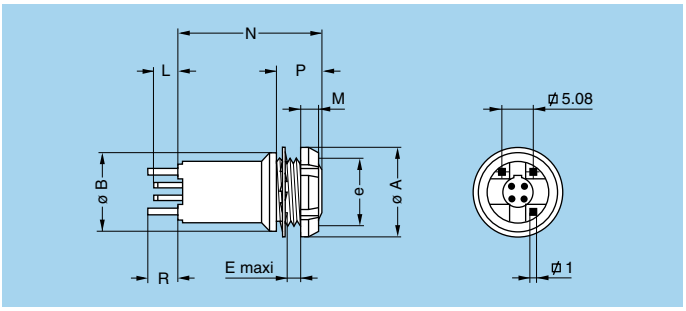

XPF Fixed socket, nut fixing, long shell, keys (F) for printed circuit
(back panel mounting)

Reference		Dimensions (mm)							
Model	Series	A	B	e	E	M	N	P	R
XPF	0B	12	11	M9x0.6	1.5	2.5	19	5	4

P2 Panel cut-out (page 152)

P15+P16 PCB drilling pattern (pages 154 and 156)

Note:
Length «L» depends on the number of contacts, see table on page 156.

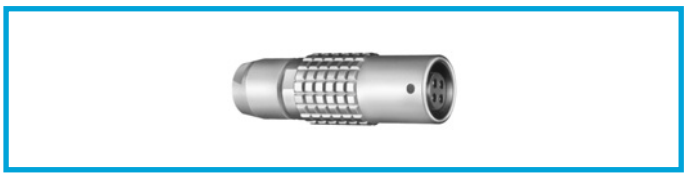

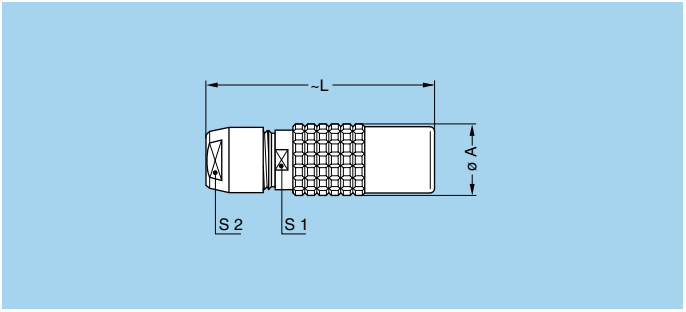

PHG Free socket, key (G) or keys (A…M and R), cable collet

Reference		Dimensions (mm)			
Model	Series	A	L	S1	S2
PHG	00[1)]	6.8	26.0	5.5	5
PHG	0B	9.5	35.5	8.0	7
PHG	1B	12.5	40.5	10.0	9
PHG	2B	16.5	47.0	13.0	12
PHG	3B	19.0	56.0	15.0	14
PHG	4B	26.0	73.0	21.0	20
PHG	5B	36.0	99.0	31.0	30

M1 Cable assembly (page 161)

Note: 1) the surface design of the 00 series is different.

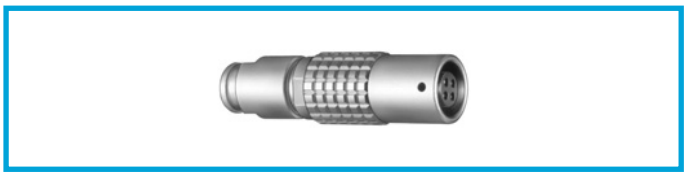

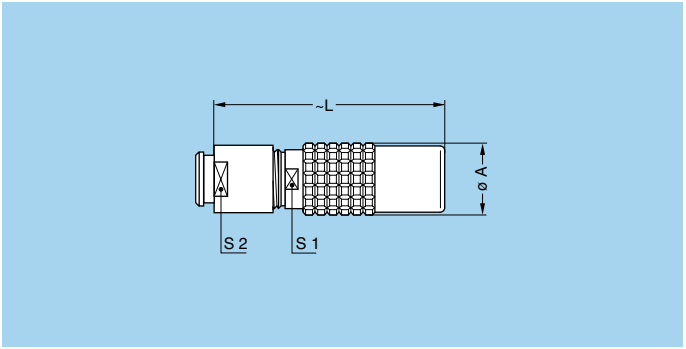

PHG Free socket, key (G) or keys (A…M), cable collet and nut for fitting a bend relief 2)

Reference		Dimensions (mm)			
Model	Series	A	L	S1	S2
PHG	00[1)]	6.8	34.0	5.5	6
PHG	0B	9.5	34.5	8.0	7
PHG	1B	12.5	39.5	10.0	9
PHG	2B	16.5	46.0	13.0	12
PHG	3B	19.0	54.5	15.0	15
PHG	4B	26.0	69.0	21.0	20

M1 Cable assembly (page 161)

Note: 1) the surface design of the 00 series is different.
2) to order, add a «Z» at the end of the reference.

The bend relief must be ordered separately (see page 141).

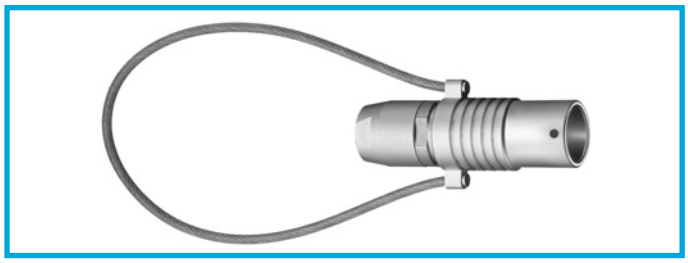

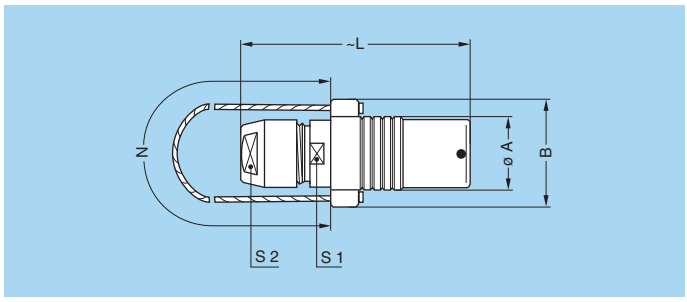

PNG Free socket, nut fixing, key (G) or keys (A…L and R), cable collet with lanyard release

Reference		Dimensions (mm)					
Model	Series	A	B	L	N	S1	S2
PNG	1B	12.4	18.4	40.5	140	10	9
PNG	2B	16.5	22.5	47.0	160	13	12
PNG	3B	19.0	26.0	56.0	190	15	14
PNG	4B	26.0	33.0	73.0	230	21	20
PNG	5B	36.0	43.0	99.0	300	31	30

M1 Cable assembly (page 161)

Note: cable material: stainless steel with Polyamide sheath

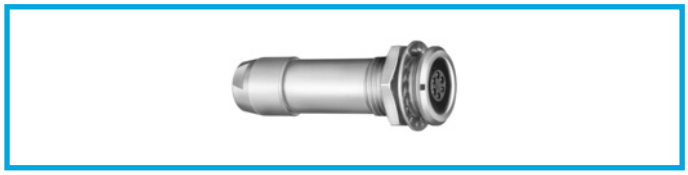

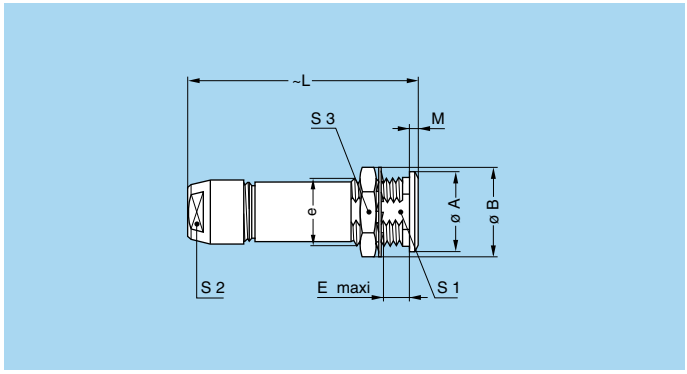

PKG Fixed socket, nut fixing, key (G) or keys (A…M and R), cable collet

Reference		Dimensions (mm)								
Model	Series	A	B	e	E	L	M	S1	S2	S3
PKG	00	8	10.2	M7x0.5	6.5	26.0	1.0	6.3	5	9
PKG	0B	10	12.4	M9x0.6	7.0	35.5	1.2	8.2	7	11
PKG	1B	14	15.8	M12x1.0	7.5	40.5	1.5	10.5	9	14
PKG	2B	18	19.2	M15x1.0	8.5	47.0	1.8	13.5	12	17
PKG	3B	22	25.0	M18x1.0	11.5	56.0	2.0	16.5	14	22
PKG	4B	28	34.0	M25x1.0	12.0	73.0	2.5	23.5	20	30
PKG	5B	40	40.0	M35x1.0	11.0	99.0	3.0	33.5	30	–

P1 Panel cut-out (page 152)

M1 Cable assembly (page 161)

Note: the 5B series is delivered with a tapered washer and a round nut.

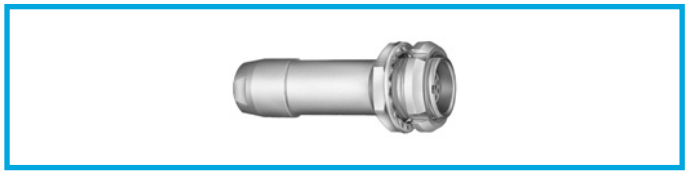

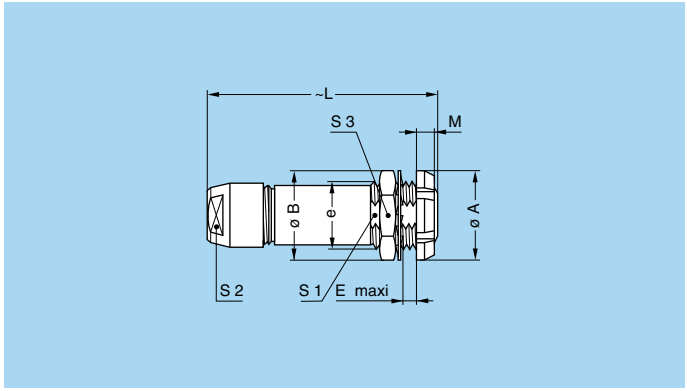

PFG Fixed socket, with two nuts, key (G) or keys (A…M and R), cable collet (back panel mounting)

Reference		Dimensions (mm)								
Model	Series	A	B	e	E	L	M	S1	S2	S3
PFG	00	10	10.2	M7x0.5	5.3	26.0	2.5	6.3	5	9
PFG	0B	12	12.4	M9x0.6	5.0	35.5	2.5	8.2	7	11
PFG	1B	16	15.8	M12x1.0	5.0	40.5	3.5	10.5	9	14
PFG	2B	20	19.2	M15x1.0	6.5	47.0	3.5	13.5	12	17
PFG	3B	24	25.0	M18x1.0	9.0	56.0	4.5	16.5	14	22
PFG	4B	30	34.0	M25x1.0	11.0	73.0	4.5	23.5	20	30
PFG	5B	41	40.0	M35x1.0	10.0	99.0	5.0	33.5	30	–

P1 Panel cut-out (page 152)

M1 Cable assembly (page 161)

Note: the 3B, 4B and 5B series are delivered with a conical nut.
The 5B series is delivered with a tapered washer and a round nut.

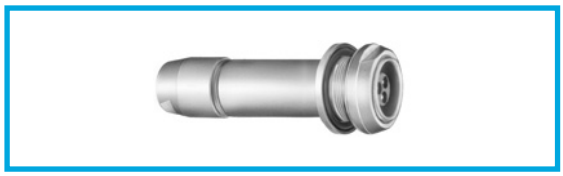

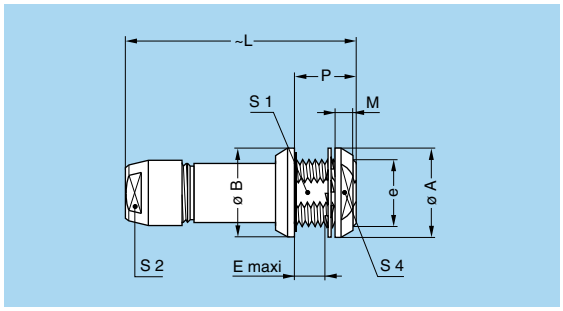

PEG Fixed socket, nut fixing, key (G) or keys (A…L), cable collet (back panel mounting)

Reference		Dimensions (mm)									
Model	Series	A	B	e	E	L	M	S1	S2	S4	P
PEG	3B	24	25	M18x1.0	5.0	56	4.5	16.5	14	20	12
PEG	4B	32	34	M25x1.0	12.5	73	5.0	23.5	20	27	20

P1 Panel cut-out (page 152)

M1 Cable assembly (page 161)

Note: the 4B series has an o-ring on the flange.

R●● Fixed coupler, nut fixing, key (G) or keys (A and J) at the flange end and keys (J, K or M) at the other end

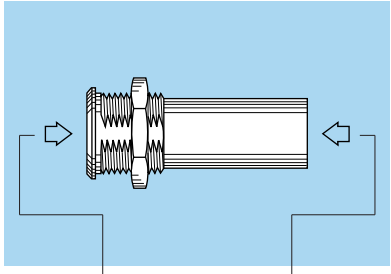

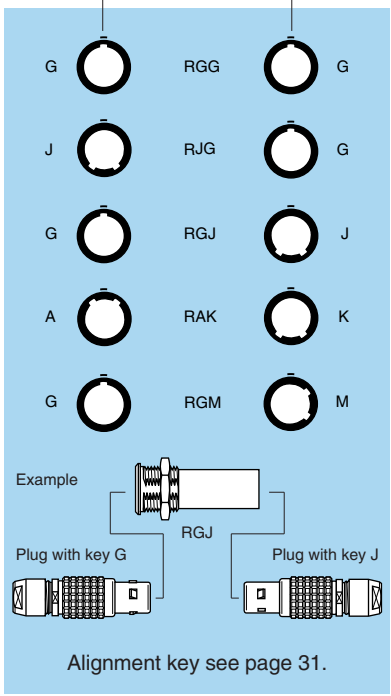

Alignment key see page 31.

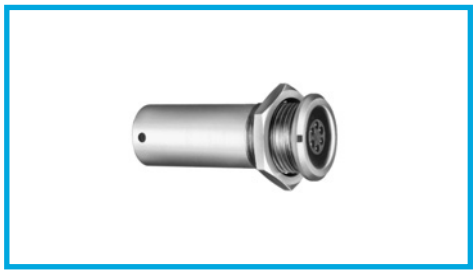

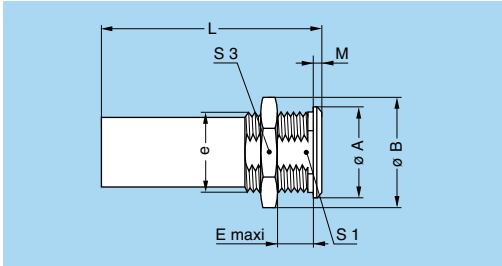

Reference		Contacts	Dimensions (mm)							
Model	Series	Type	A	B	e	E	L	M	S1	S3
RGG [1]	0B	female – female	12	13.8	M10x0.75	8.0	34	2.0	9.0	12
RGG [2]	0B	female – female	12	13.8	M10x0.75	8.0	43	2.0	9.0	12
RJG	0B	male – female	12	13.8	M10x0.75	8.0	34	2.0	9.0	12
RGJ		female – male								
RAK		female – male								
RGM		female – male								
RGG [3]	1B	female – female	16	19.2	M14x1.00	8.5	47	2.5	12.5	17
RJG	1B	male – female	16	19.2	M14x1.00	8.5	39	2.5	12.5	17
RGJ		female – male								
RJG	2B	male – female	20	21.5	M16x1.00	12.0	44	4.0	15.0	19
RGJ		female – male								
RGJ	3B	female – male	25	27.0	M20x1.00	32.0	53	4.0	18.5	24
RGJ	4B	female – male	34	34.0	M25x1.00	50.0	65	4.0	23.5	30

P4 Panel cut-out (page 152)

Note:
[1] only available with two contacts.
[2] only available with three and four contacts.
[3] only available with three contacts.
For this fixed coupler, the first contact type mentioned is always the one at the flange end. On request, these couplers can be produced in other series, with other keys.

Elbow socket models

Technical Characteristics

Types

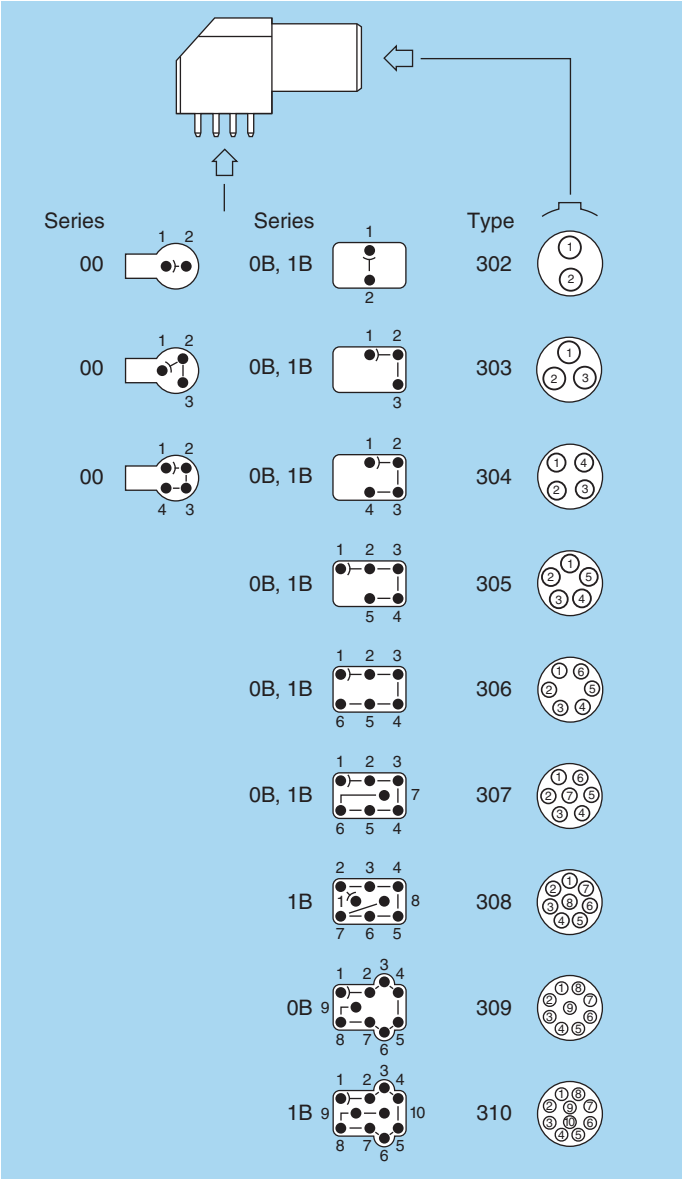

Materials and Treatment

Component	Material	Surface treat. (µm)		
		Cu	Ni	Au
Housing	PPS	–		
	Brass	0.5	3	–
Metallic parts	Brass	0.5	3	–
Earthing crown	Bronze	0.5	3	–
Insulator	PEEK	–		
Female contact	Bronze	0.5	3	1.5

Note:
The surface treatment standards are as follows:
– Nickel: FS QQ-N-290A. – Gold: ISO 27874

Electrical

Model	Series	Types	Test voltage (kV rms)[1] Contact-contact	Test voltage (kV rms)[1] Contact-shell	Rated current (A)[1]
EPG-XBG	00	302-303-304	1.00	1.00	2.0
EPG-EXG	0B	302	1.45	1.20	4.5
EPG-EXG	0B	303	1.70	1.60	4.5
EPG-EXG	0B	304	1.30	1.10	4.5
EPG-EXG	0B	305	1.25	1.20	4.5
EPG-EXG	0B	306	1.25	1.20	2.5
EPG-EXG	0B	307	1.00	1.00	2.0
EPG-EXG	0B	309	1.00	1.10	1.5
EPG-EXG	1B	302	1.70	1.45	4.5
EPG-EXG	1B	303	1.60	1.85	4.5
EPG-EXG	1B	304	1.70	1.80	4.5
EPG-EXG	1B	305	1.30	1.55	4.5
EPG-EXG	1B	306	1.35	1.45	4.5
EPG-EXG	1B	307	1.45	1.45	2.0
EPG-EXG	1B	308	1.30	1.30	2.0
EPG-EXG	1B	310	1.00	1.00	1.5
EPG	1B	314	1.00	1.30	1.0

Note:
[1] see calculation method, caution and suggested standard on page 178.

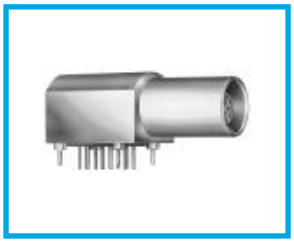

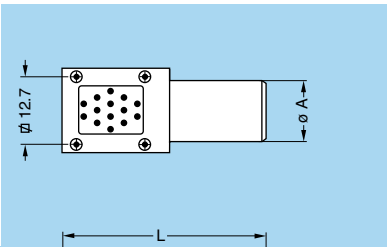

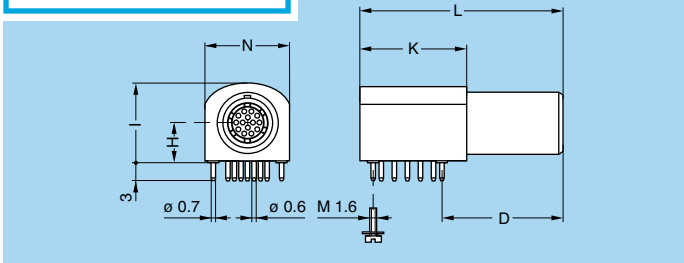

EPG Elbow (90°) socket for printed circuit, key (G) or keys (A…F) (solder or screw fixing)

Reference	Dimensions (mm)						
	A	D	H	I	K	L	N
EPG.1B.314.NLN	11	21	7.7	14.3	19	36	15.4

P20 PCB drilling pattern (page 158)

Note: to replace the 4 ground pins by 4 screws (M1.6) add an «S» to the end of the part number. (e.g.: EPG.1B.314.NLNS)

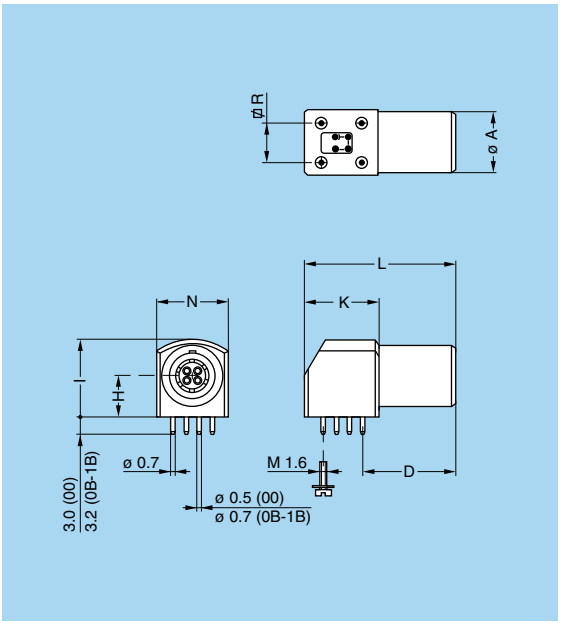

EPG Elbow (90°) socket for printed circuit, key (G) or keys (A…F) (solder or screw fixing)

Reference	Dimensions (mm)							
	A	D	H	I	K	L	N	R
EPG.00.302.HLN	6.8	11.5	3.5	7.0	8.7	19	7.1	5.08
EPG.00.303.HLN								
EPG.00.304.HLN								
EPG.0B.302.HLN	9.0	14.6	6.7	12.6	13.3	25	11.7	7.62
EPG.0B.303.HLN								
EPG.0B.304.HLN								
EPG.0B.305.HLN								
EPG.0B.306.HLN								
EPG.0B.307.HLN								
EPG.0B.309.HLN								
EPG.1B.302.HLN	11.0	16.6	7.5	14.0	13.3	27	12.6	7.62
EPG.1B.303.HLN								
EPG.1B.304.HLN								
EPG.1B.305.HLN								
EPG.1B.306.HLN								
EPG.1B.307.HLN								
EPG.1B.308.HLN								
EPG.1B.310.HLN								

P18 PCB drilling pattern 00 series (page 158)

P19 PCB drilling pattern 0B, 1B series (page 158)

Note: In the 0B and 1B series, it is possible to replace the 4 ground pins by 4 screws (M1.6) add an «S» to the end of the part number. (e.g.: EPG.0B.307.HLNS)

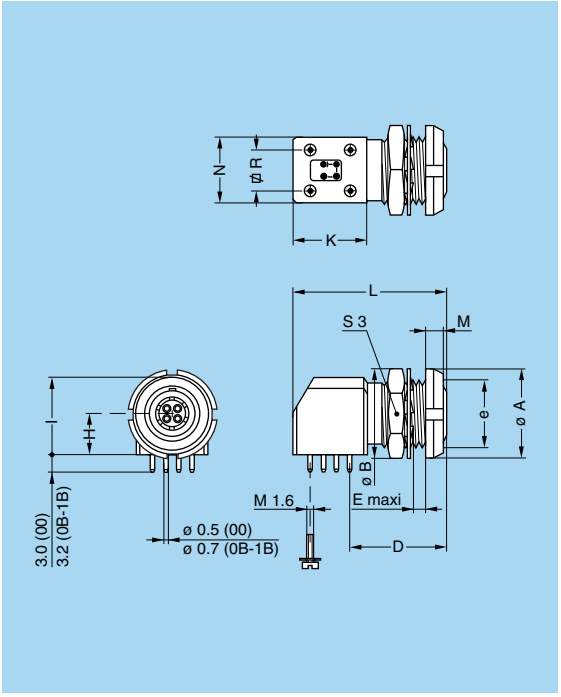

EXG Elbow (90°) socket for printed circuit with two nuts, key (G) or keys (A…F) (solder or screw fixing) (back panel mounting)

XBG Elbow (90°) socket fixing nut for printed circuit, key (G) or keys (A, B) (back panel mounting)

Reference	Dimensions (mm)												
	A	B	D	e	E	H	I	K	L	M	N	R	S3
XBG.00.302.HLN	10	10.2	11.5	M7x0.5	2.1	3.5	7.0	8.7	19	2.5	7.1	5.08	9
XBG.00.303.HLN													
XBG.00.304.HLN													
EXG.0B.302.HLN	12	12.4	14.6	M9x0.6	6.0	6.7	12.6	13.3	25	2.5	11.7	7.62	11
EXG.0B.303.HLN													
EXG.0B.304.HLN													
EXG.0B.305.HLN													
EXG.0B.306.HLN													
EXG.0B.307.HLN													
EXG.0B.309.HLN													
EXG.1B.302.HLN	14	15.0	16.6	M11x0.5	7.5	7.5	14.0	13.3	27	3.5	12.6	7.62	13
EXG.1B.303.HLN													
EXG.1B.304.HLN													
EXG.1B.305.HLN													
EXG.1B.306.HLN													
EXG.1B.307.HLN													
EXG.1B.308.HLN													
EXG.1B.310.HLN													

P2 Panel cut-out 00, 0B series (page 152)

P10 Panel cut-out 1B series (page 152)

P18 PCB drilling pattern 00 series (page 158)

P19 PCB drilling pattern 0B, 1B series (page 158)

Note: In the 0B and 1B series, it is possible to replace the 4 ground pins by 4 screws (M1.6) add an «S» to the end of the part number. (e.g.: EXG.0B.307.HLNS).

Plastic housing models

These connectors are particularly recommended for all applications requiring maximum electrical insulation when mated. The design, including a latch sleeve and a metal earthing crown, guarantees EMC screening efficiency to meet most requirements.

Technical Characteristics

Mechanical and Climatical

Characteristics	Value			Standard
	PEEK	PSU	PPSU	
Colour	natural (beige)	white or grey	cream	–
Endurance	> 5000 cycles	> 5000 cycles	> 5000 cycles	IEC 60512-5 test 9a
Humidity	up to 95% at 60° C			–
Temperature range	- 50° C/+250° C	- 50° C/+150° C	- 50° C/+180° C	–
Sterilization resistance 1)	> 200 cycles	~20 cycles	> 100 cycles	IEC 60601-1 § 44.7
Resistance to solvents	very good	limited	good	–

Note: 1) Steam sterilization

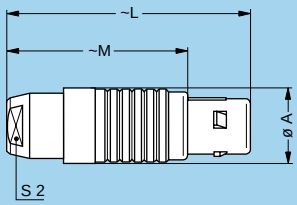

FGG Straight plug, key (G or J), cable collet, PEEK outer shell

Reference		Dimensions (mm)			
Model	Series	A	L	M	S2
FGG	1B	13.5	43.0	32.0	10
FGG	3B	19.0	62.0	47.0	15
FGG	4B	26.0	78.5	60.5	20

M1 Cable assembly (page 161)

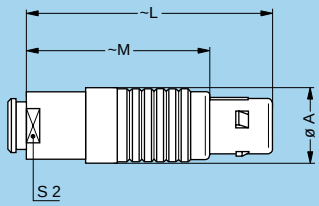

FGG Straight plug, key (G or J), cable collet, PEEK outer shell and nut for fitting a bend relief 1)

Reference		Dimensions (mm)				Note on availability
Model	Series	A	L	M	S2	
FGG	1B	13.5	42.2	31.2	10	for all collet type
FGG	4B	26.0	83.2	65.2	20	only from collet M82 and up

M1 Cable assembly (page 161)

Note: 1) to order, add a «Z» at the end of the reference.

The bend relief must be ordered separately (see page 141).

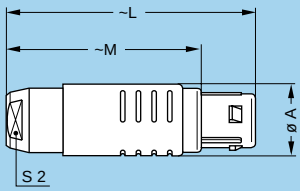

FGY Straight plug, keys (Y), cable collet and PSU or PPSU outer shell

Reference		Dimensions (mm)			
Model	Series	A	L	M	S2
FGY	2B	16.5	50.5	39.5	13
FGY	3B	19.0	58.0	43.0	15
FGY	4B	26.0	76.2	58.2	20

M1 Cable assembly (page 161)

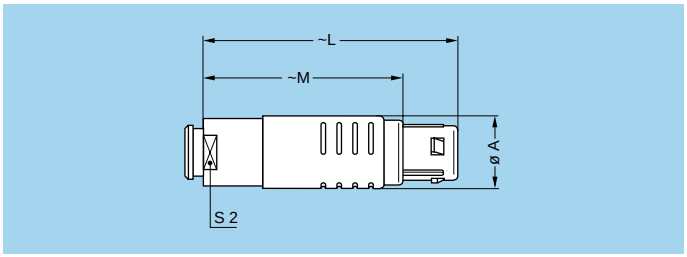

FGY Straight plug, keys (Y), cable collet and PSU or PPSU outer shell and nut for fitting a bend relief [1)]

Reference		Dimensions (mm)				Note on availability
Model	Series	A	L	M	S2	
FGY	2B	16.5	49.5	38.5	13	only for collet M42 and up
FGY	3B	19.0	56.5	41.5	15	only for collet D62 and up
FGY	4B	26.0	74.4	56.4	20	only for collet M82 and up

M1 Cable assembly (page 161)

Note: [1)] to order, add a «Z» at the end of the reference.

The bend relief must be ordered separately (see page 141).

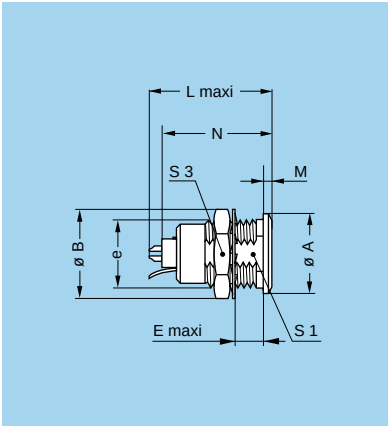

ENG Fixed socket with earthing tag, nut fixing, key (G or J), PEEK outer shell

Reference		Dimensions (mm)								
Model	Series	A	B	e	E	L	M	N[1)]	S1	S3
ENG	1B	14	15.8	M12x1.0	7.5	23.0	1.5	21.1	10.5	14
ENG	3B	22	25.0	M18x1.0	11.5	30.7	2.0	28.1	16.5	22
ENG	4B	28	34.0	M25x1.0	12.0	35.7	2.5	32.6	23.5	30

P1 Panel cut-out (page 152)

Note: [1)] maximum length with crimp contacts.

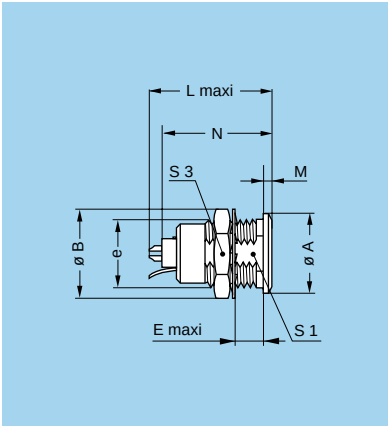

ENY Fixed socket with earthing tag, nut fixing, keys (Y), PSU or PPSU outer shell

Reference		Dimensions (mm)								
Model	Series	A	B	e	E	L	M	N[1)]	S1	S3
ENY	2B	18	19.2	M15x1.0	8.5	26.7	1.8	24.6	13.5	17
ENY	3B	22	25.0	M18x1.0	11.5	30.7	2.0	28.1	16.5	22
ENY	4B	28	34.0	M25x1.0	12.0	35.7	2.5	32.6	23.5	30

P1 Panel cut-out (page 152)

Note: [1)] maximum length with crimp contacts.

Note: other models with plastic outer shell are available on request.

Watertight or vacuumtight models

These plug, socket and coupler models allow the device on which they are fitted to reach a protection index of IP68 as per IEC 60529. They are fully compatible with plugs of the same series and are widely used for portable radios, military, laboratory equipment, aviation, etc.
These models are identified by a letter «P» at the end of the reference.
Most of these models are also available in a vacuumtight version. Such models are identified by an additional letter «V» at the end of the part number (certificate on request).
Epoxy resin is used to seal these models.

Technical Characteristics

Mechanical and Climatical

Characteristics	Value	Standard
Endurance	> 5000 cycles	IEC 60512-5 test 9a
Humidity	up to 95% at 60° C	
Temperature range (00 to 1B)	- 20° C/+100° C	
Temperature range (2B to 5B)	- 20° C/+80° C	
Salt spray corrosion test	> 144h	IEC 60512-6 test 11f
Climatical category	20/80/21	IEC 60068-1
Leakage rate (He)[1)]	< 10^{-7} mbar.l.s^{-1}	IEC 60512-7 test 14b

Note: [1)] only for vacuumtight models.

Characteristics		Value	Standard
Maximum operating pressure[2)]	00	60 bars	IEC 60512-7 test 14d
	0B	60 bars	
	1B	60 bars	
	2B	40 bars	
	3B	30 bars	
	4B	15 bars	
	5B	5 bars	

Note: [2)] this value corresponds to the maximum allowed pressure difference for the assembled socket.

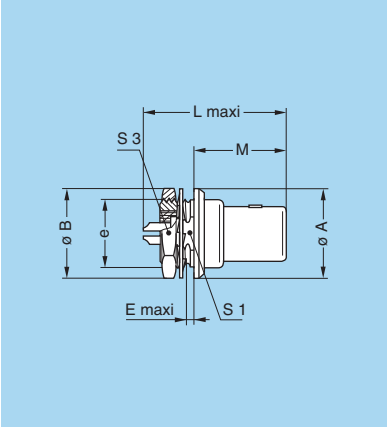

YHG Fixed plug, nut fixing, non-latching, key (G) or keys (A…M)

Reference		Dimensions (mm)							
Model	Series	A	B	e	E	L	M	S1	S3
YHG	0B	13.0	12.4	M9x0.6	2.4	24.1	14.2	8.2	11
YHG	1B	16.0	15.8	M12x1.0	3.9	28.0	16.2	10.5	14
YHG	2B	19.0	19.2	M15x1.0	5.5	33.1	17.8	13.5	17
YHG	3B	22.0	25.0	M18x1.0	5.1	38.2	22.2	16.5	22

P9 Panel cut-out (page 152)

Note: this model does not include an O-ring behind the flange, it ensures only IP61 protection index. Consequently, it is not vacuumtight. Watertightness (when mated) is only ensured with HHG and HCG sockets.

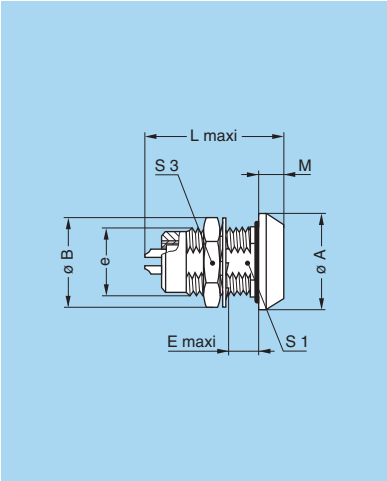

HGG Fixed socket, nut fixing, key (G) or keys (A…M and R), watertight or vacuumtight

Reference		Dimensions (mm)							
Model	Series	A	B	e	E	L	M	S1	S3
HGG	00	11	10.2	M7x0.5	8.0	18.0	1.5	–	9
HGG	0B	13	12.4	M9x0.6	7.0	21.5	3.0	8.2	11
HGG	1B	18	15.8	M12x1.0	7.0	26.6	4.5	10.5	14
HGG	2B	20	19.2	M15x1.0	8.0	31.6	4.0	13.5	17
HGG	3B	25	25.0	M18x1.0	11.5	36.1	4.0	16.5	22
HGG	4B	34	34.0	M25x1.0	11.0	43.1	4.0	23.5	30
HGG	5B	45	40.0	M35x1.0	11.0	53.6	5.0	33.5	–

P9 Panel cut-out (page 152)

Note: the 5B series is delivered with a tapered washer and a round nut.

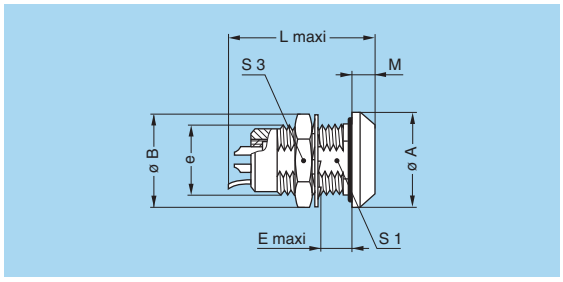

HNG Fixed socket, nut fixing, with earthing tag, key (G) or keys (A…M), watertight or vacuumtight

Reference		Dimensions (mm)							
Model	Series	A	B	e	E	L	M	S1	S3
HNG	0B	13	12.4	M9x0.6	7	21.5	3	8.2	11

P9 Panel cut-out (page 152)

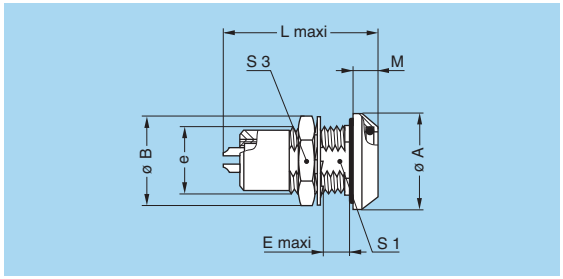

HHG Fixed socket, nut fixing, key (G) or keys (A…M), watertight or vacuumtight (watertight when mated)

Reference		Dimensions (mm)							
Model	Series	A	B	e	E	L	M	S1	S3
HHG	0B	13	12.4	M9x0.6	7.0	24.5	4.8	8.2	11
HHG	1B	18	15.8	M12x1.0	7.0	30.3	5.2	10.5	14
HHG	2B	22	19.2	M15x1.0	8.0	35.6	6.0	13.5	17
HHG	3B	25	25.0	M18x1.0	11.5	41.3	7.2	16.5	22

P9 Panel cut-out (page 152)

Note: this model ensures watertightness (IP66) in the mating area when mated with FGG or similar plug.

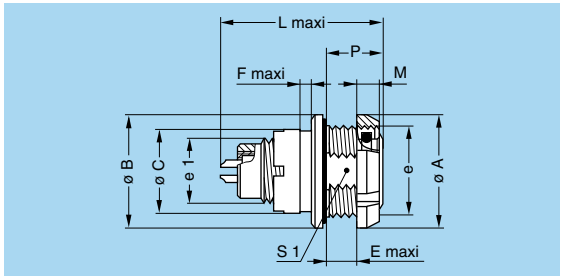

HCG Fixed socket, nut fixing, key (G) or keys (A…M), watertight or vacuumtight (watertight when mated) (back panel mounting)

Reference		Dimensions (mm)										
Model	Series	A	B	C	e	e1	E	F	L	M	P	S1
HCG	0B	18	18	12.0	M14x1.0	M9x0.6	3.9	1.0	24.5	3.5	7.5	12.5
HCG	1B	20	20	14.5	M16x1.0	M12x1.0	6.2	2.0	30.3	3.5	10.0	14.5
HCG	2B	24	24	17.5	M19x1.0	M14x1.0	6.7	1.5	35.6	3.5	11.3	17.0

P3 Panel cut-out (page 152)

Note: this model ensures watertightness (IP66) in the mating area when mated with FGG or similar plug.

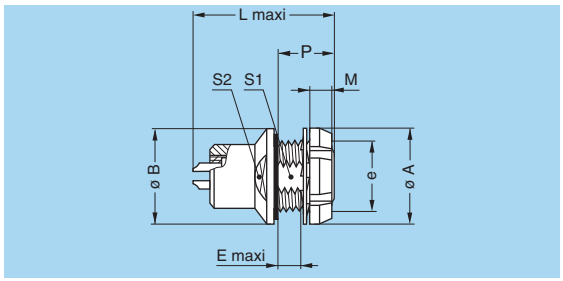

HEG Fixed socket, nut fixing, key (G) or keys (A…M), watertight or vacuumtight (back panel mounting)

Reference		Dimensions (mm)								
Model	Series	A	B	e	E	L	M	P	S1	S2
HEG	00	10	11	M7x0.5	2.5	18.2	2.5	6.0	6.3	–
HEG	0B	12	13	M9x0.6	5.5	21.5	2.5	9.0	8.2	–
HEG	1B	16	18	M12x1.0	6.5	26.6	3.5	11.0	10.5	–
HEG	2B	20	20	M15x1.0	5.0	31.6	3.5	9.6	13.5	15

P9 Panel cut-out (page 152)

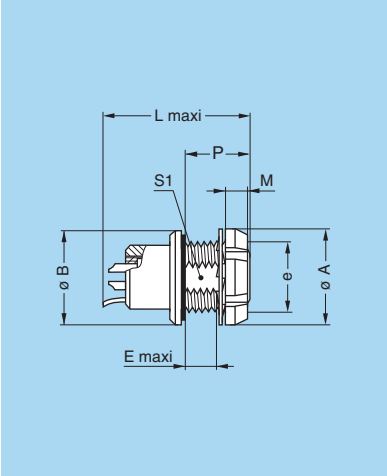

HMG Fixed socket with earthing tag, nut fixing, key (G) or keys (A…M), watertight or vacuumtight (back panel mounting)

Reference		Dimensions (mm)							
Model	Series	A	B	e	E	L	M	P	S1
HMG	00	10	11	M7x0.5	2.5	18.0	2.5	6.0	6.3
HMG	0B	12	13	M9x0.6	5.5	21.5	2.5	9.0	8.2
HMG	1B	16	18	M12x1.0	5.5	26.6	3.5	11.0	10.5
HMG	2B[1)]	20	20	M15x1.0	5.5	31.6	3.5	9.6	13.5
HMG	3B	24	25	M18x1.0	7.5	36.1	4.5	14.0	16.5

P9 Panel cut-out (page 152)

Note: 1) the surface design of the 2B series is different.
The 3B series is delivered with a conical nut.

S●● Fixed coupler, nut fixing, key (G) or keys (A, B, J, K and L) at the flange end and key (G) or keys (A, B, J, K and L) at the other end, watertight or vacuumtight

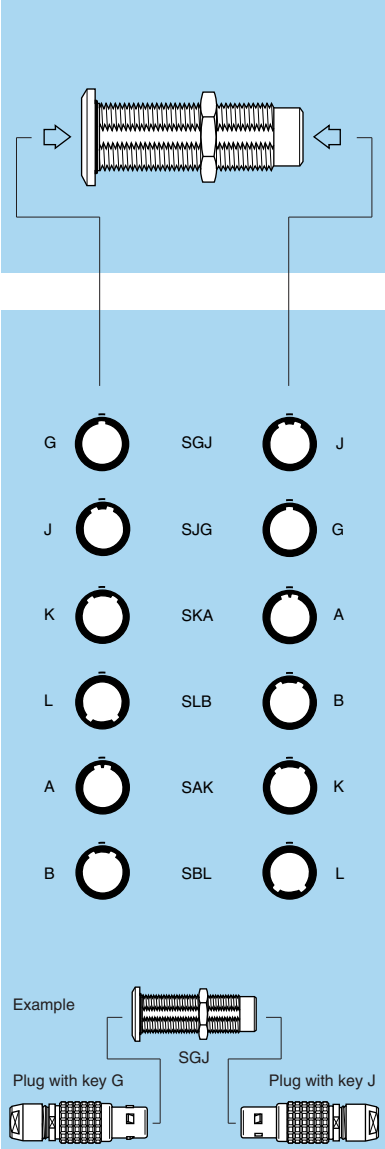

Alignment key see page 31.

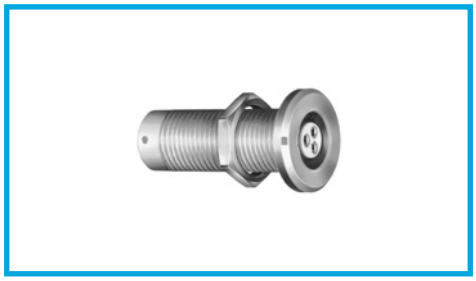

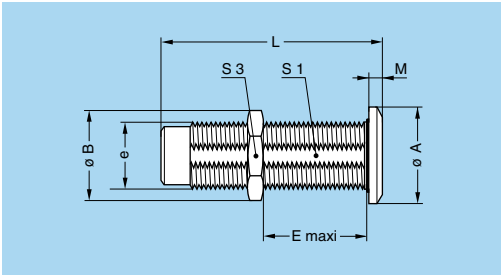

Reference		Contacts	Dimensions (mm)							
Model	Series	Type	A	B	e	E	L	M	S1	S3
SGJ	0B	female – male	14	13.8	M10x0.75	17	34	2.0	9.0	12
SJG		male – female								
SGJ	1B	female – male	17	15.8	M12x1.00	28	39	2.5	10.5	14
SJG		male – female								
SGJ	2B	female – male	20	21.5	M16x1.00	25	44	4.0	15.0	19
SJG		male – female								
SGJ	3B	female – male	25	27.0	M20x1.00	30	53	4.0	18.5	24
SJG		male – female								
SAK		female – male								
SBL		female – male								
SAK	4B	female – male	34	34.0	M25x1.00	50	65	4.0	23.5	30
SBL		female – male								
SGJ		female – male								
SJG		male – female								
SGJ	5B	female – male	45	40.0	M35x1.00	58	80	5.0	33.5	–
SJG		male – female								
SKA		male – female								
SLB		male – female								
SAK		female – male								
SBL		female – male								

P4 Panel cut-out (page 152)

P9 Panel cut-out 1B series (page 152)

Note: for this fixed coupler, the first contact type mentioned is always the one at the flange end.
On request these couplers can be produced in other series, with other keys.
The 5B series is delivered with a round nut.

Bridge models

Technical Characteristics

Mechanical and Climatical

Characteristics	Value	Standard
Endurance	> 1000 cycles	IEC 60512-5 test 9a
Working temperature	maximum 90° C	

Materials and Treatment

Component	Material	Surface treat. (µm)			
		Cu	Ni	Cr	Au
Plastic housing	Polyamide	–			
Metallic parts	Brass	0.5	3	–	–
	Brass	0.5	3	0.3	–
Insulator	PEEK	–			
Male contact	Brass	0.5	3	–	1.0
Female contact	Bronze	0.5	3	–	1.5

Note: the surface treatment standards are as follows:
– Nickel: FS QQ-N-290A, chrome: FS QQ-C-320B, gold: ISO 27874

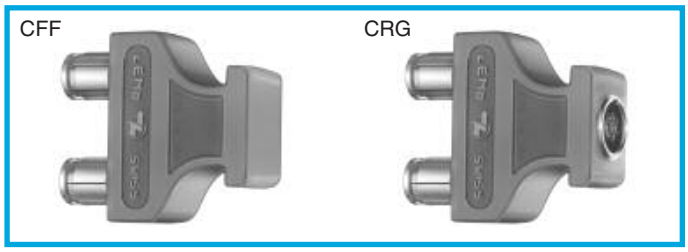

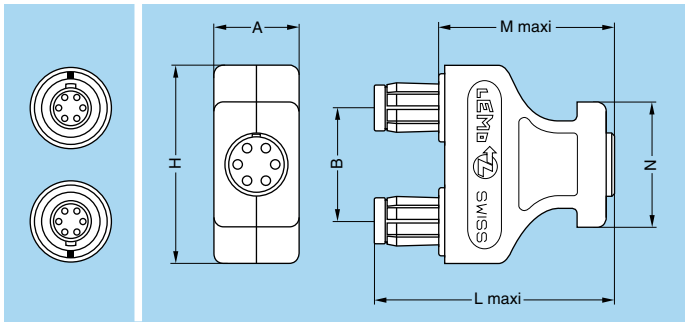

Electrical

Characteristics	Value	Standard
Contact resistance	< 6 mΩ	IEC 60512-2 test 2a

Reference	Series	Audio-Mono	Audio-Stereo	Test voltage (kV rms) 1) 2)	Rated current (A)
CFF.0B.302.PLCG	0B	●	–	1.05	4
CRG.0B.302.PLEG	0B	●	–	1.05	4
CFF.0B.303.PLCG	0B	●	–	0.80	4
CRG.0B.303.PLEG	0B	●	–	0.80	4
CRG.0B.306.PLEG	0B	–	●	0.40	2
CFF.1B.303.PLCG	1B	●	–	1.25	5
CRG.1B.303.PLEG	1B	●	–	1.25	5
CFF.1B.306.PLCG	1B	–	●	0.80	3
CRG.1B.306.PLEG	1B	–	●	0.80	3

Note: the last letter of the part number indicates the colour of the housing. Ex. G (standard) is grey. To obtain another colour, replace this letter by the letter corresponding to the selected colour (see table on page 54).
1) see calculation method, caution and suggested standard on page 178.
2) lowest measured value; contact to contact or contact to shell.

CFF Bridge plug with two non-latching plugs

CRG Bridge plug with two non-latching plugs, and monitoring socket, key (G) or keys (A…M)

Reference		Dimensions (mm)					
Model	Series	A	B	H	L	M	N
CFF-CRG	0B	13.5	14	27.5	37.2	27.2	22.5
CFF-CRG	1B	15.0	20	35.0	42.0	31.0	22.0

Note: in order to provide the user with a coding system, the bridge plug housing, the double panel washers and the bend reliefs are available in nine colours.

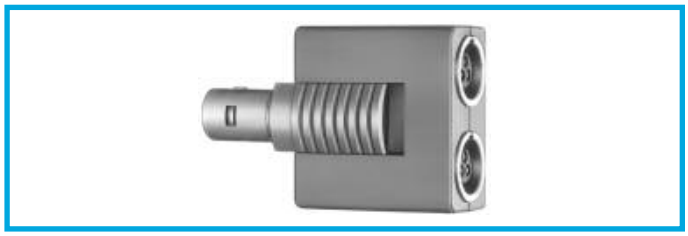

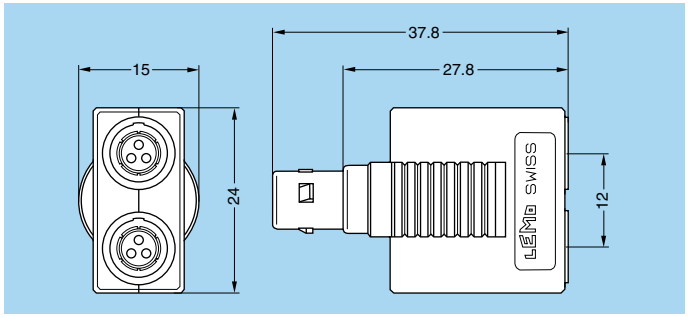

FTG Straight plug, key (G) and two parallel sockets

Reference	Number of contacts	Test voltage (kV rms) 1)	Rated current (A)
FTG.0B.302.PLFG	2	1.05	4
FTG.0B.303.PLFG	3	0.80	4
FTG.0B.304.PLFG	4	0.80	3

Note:
1) see calculation method, caution and suggested standard on page 178.

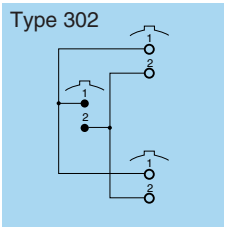

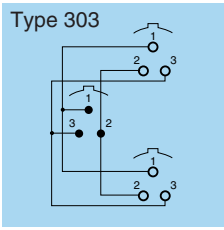

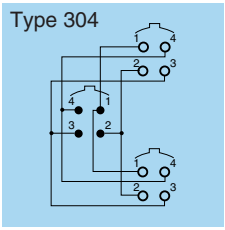

Threaded-latching models

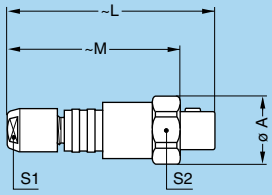

FVG Straight plug, key (G) or keys (B), cable collet

Reference		Dimensions (mm)				
Model	Series	A	L	M	S1	S2
FVG	00	9	28.5	24	5	8

Note: to be ordered with nut for fitting a bend relief to obtain the rating IP 64.

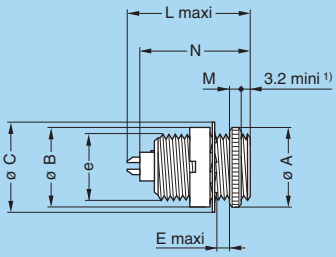

ESG Fixed socket with two round nuts, key (G) or keys (B), long threaded shell (back panel mounting)

Reference		Dimensions (mm)							
Model	Series	A	B	C	e	E	L	M	N
ESG	00	9	9	9.5	M7x0.5	3.2	15.5	2	13.7

P2 Panel cut-out (page 152)

Note: 1) minimum length of free thread to ensure mating.

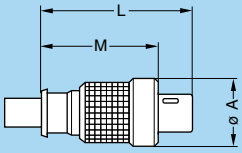

FVB Straight plug, keys (B), short shell for special cable crimping and for fitting a bend relief

Reference		Dimensions (mm)		
Model	Series	A	L	M
FVB	00	9	20	15.4

Note: after assembly the special bend relief GMF.00.018.D● (to be ordered separately) is to be fitted.

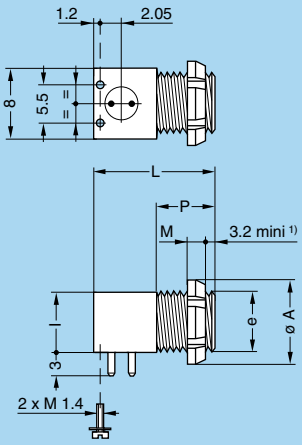

XRB Elbow (90°) socket for printed circuit, keys (B), short shell with one nut, screw fixing (back panel mounting)

Reference		Dimensions (mm)					
Model	Series	A	e	I	L	M	P
XRB	00	10	M7x0.5	7	14	2.5	7

P2 Panel cut-out (page 152)

P18 PCB drilling pattern for contact only (page 158)

Note: 1) minimum length of free thread to ensure mating.

Alignment Key (B series)

Alignment Key and Polarized Keying System

B series connector model part numbers are composed of three letters. The LAST LETTER indicates the key position and the contact type (male or female).

Front view of a socket

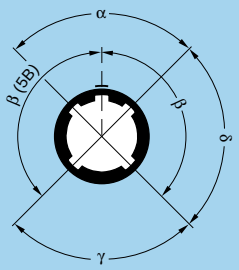

Reference	Nb of keys	Angles	Series 00	Series 0B	Series 1B	Reference	Nb of keys	Angles	Series 2B	Series 3B	Series 4B	Series 5B	Contact type Plug	Contact type Socket	Note
G	1		0°	0°	0°	G	1		0°	0°	0°	0°	male	female	●
A	2	α	30°	30°	30°	A	2	α	30°	30°	30°	30°	male	female	●
B	2		60°	60°	60°	B	2		45°	45°	45°	45°	male	female	●
C	2		–	90°	90°	C	2		60°	60°	60°	60°	male	female	●
D	2	β	–	135°	135°	D	2	γ	95°	95°	95°	95°	male	female	○
E	2		–	145°	145°	E	2	β	120°	120°	120°	120°	male	female	○
F	2		–	155°	155°	F	2		145°	145°	145°	145°	male	female	○
J	2	γ	45°	45°	45°	J	2	α	37.5°	37.5°	37.5°	37.5°	female	male	●
K	2		–	70°	70°	K	2		52.5°	52.5°	52.5°	52.5°	female	male	○
L	2		–	80°	80°	L	2	γ	70°	70°	70°	70°	female	male	○
M	2	δ	–	110°	–	M	2	–	–	–	–	–	female	male	○
Y	3	–	–	–	–	Y	3	β	112.5°	126°	112.5°	–	male	female	●[1)]
		–	–	–	–			γ	100°	102°	147.5°	–			

Front view of a socket

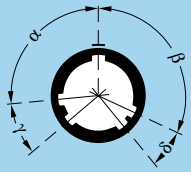

Reference	Nb of keys	Angles	Series 00	Series 0B	Series 1B	Reference	Nb of keys	Angles	Series 2B	Series 3B	Series 4B	Series 5B	Contact type Plug	Contact type Socket	Note
R	5	α	–	–	–	R	5	α	–	–	–	95°	male	female	●
		β	–	–	–			β	–	–	–	115°			
		γ	–	–	–			γ	–	–	–	20°			
		δ	–	–	–			δ	–	–	–	30°			

Note:
FTG, FGY, ENY models are not available with all the keys. Please consult pages corresponding to these models.
For R●● models see explanation on page 21 and for S●● models see explanation on page 28.
[1)] only FGY and ENY models are available.

● First choice alternative
○ Special order alternative

K Series

K series connectors have been specifically designed for outdoor applications.
They include an inner sleeve and two seals to prevent penetration of solids or liquids into the housing formed by the plug, free socket, fixed socket or coupler. All models of this series are watertight when mated to give a protection index of IP68 as per IEC 60529 standard (in mated condition) when correctly assembled to an appropriate cable (IP66 otherwise).
K series connectors have the same insulators as the B series and have the following main features:

- security of the Push-Pull latching system
- multipole types 2 to 64 contacts
- keying system («G» key standard) for connector alignment
- 360° screening for full EMC shielding
- rugged housing for extreme working conditions.
- watertight connection (IP 68/IP 66)
- solder, crimp or print (straight or elbow) contacts
- multiple key options to avoid cross mating of similar connectors
- high packing density for space savings

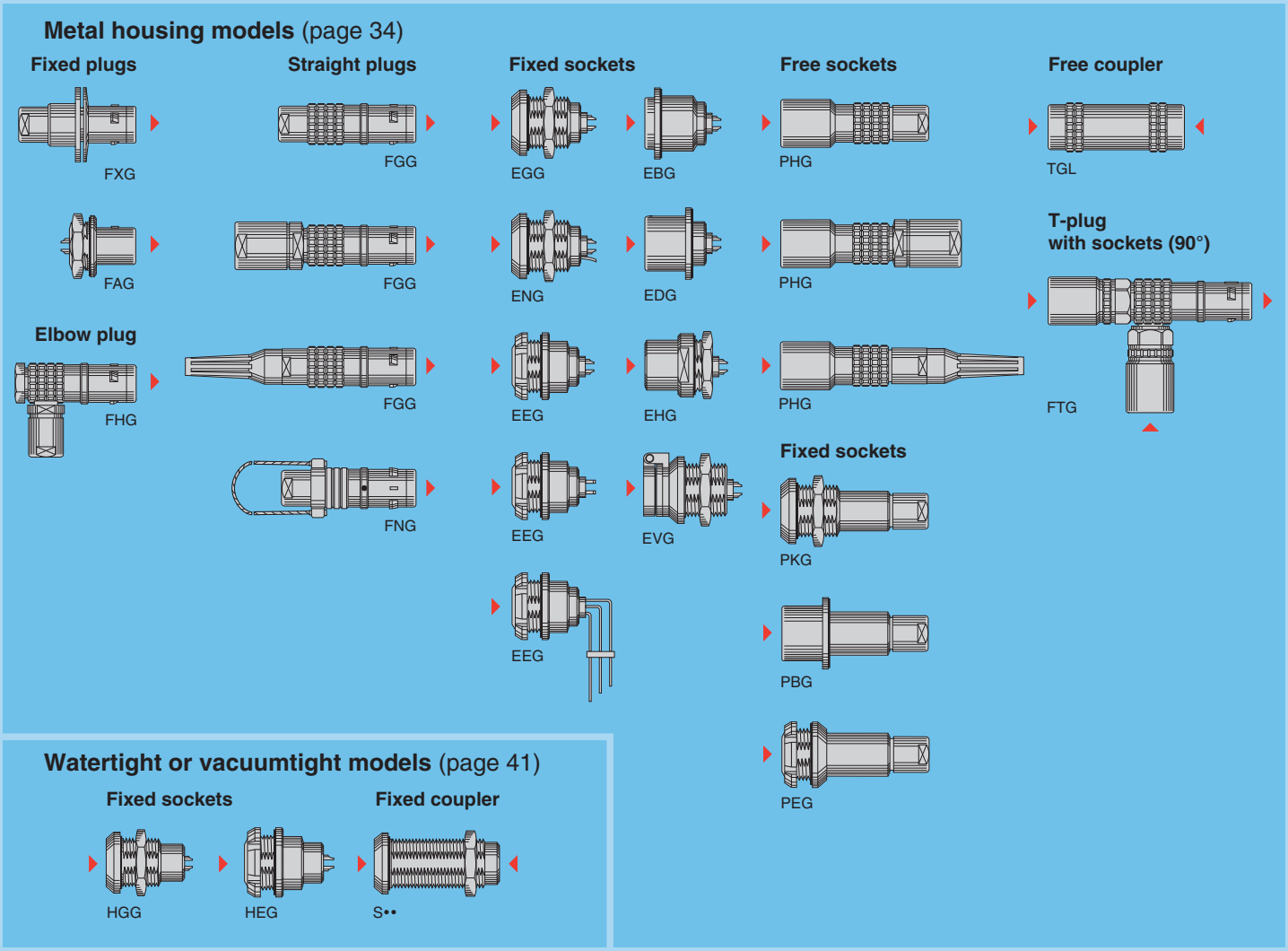

Part Numbering System

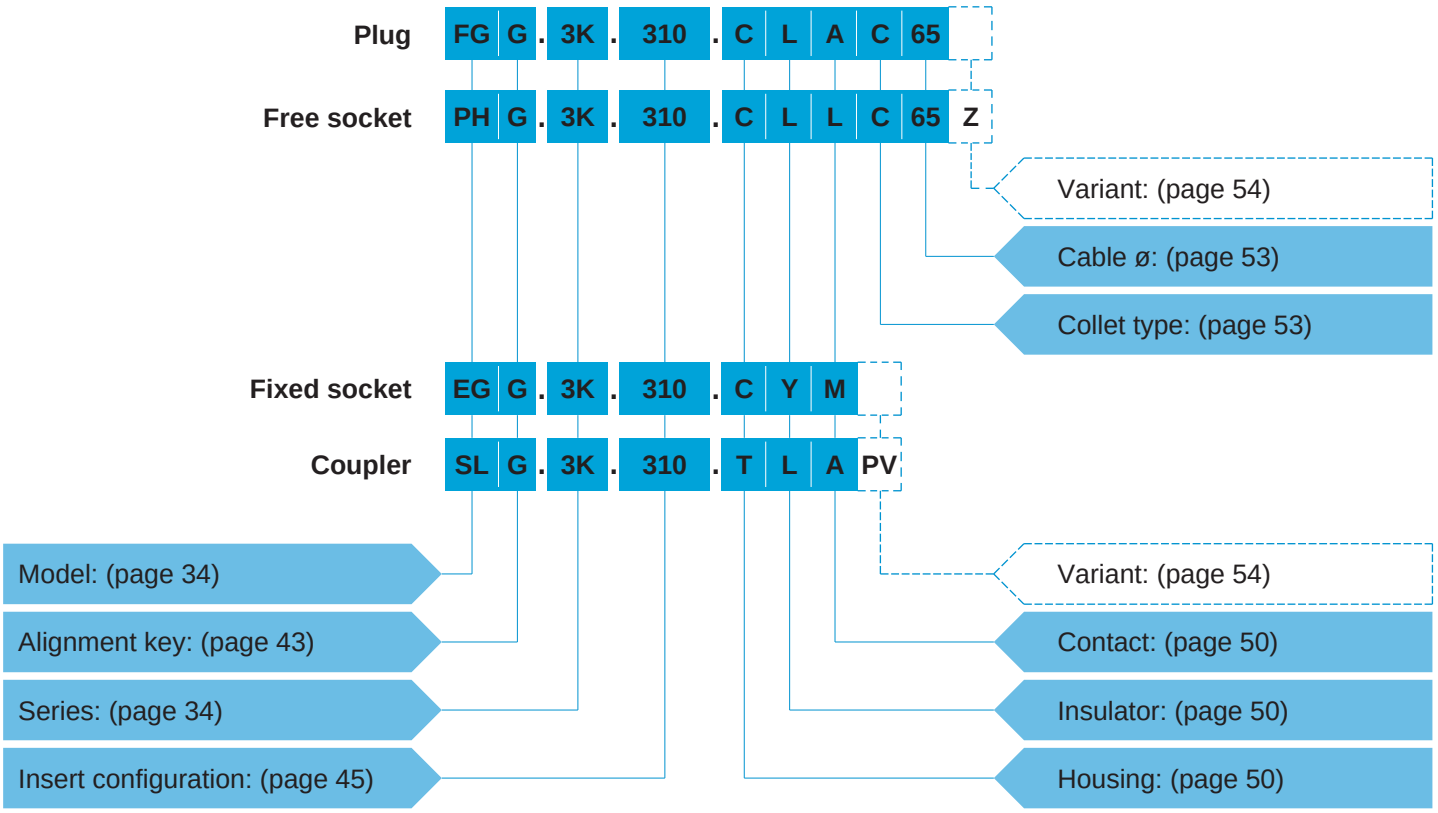

Part Number Example

Straight plug with cable collet:
FGG.3K.310.CLAC65 = straight plug with key (G) and cable collet, 3K series, multipole type with 10 contacts, outer shell in chrome-plated brass, PEEK insulator, male solder contacts, C type collet for 6.5 mm diameter cable.

Free socket:
PHG.3K.310.CLLC65Z = free socket with key (G) and cable collet, 3K series, multipole type with 10 contacts, outer shell in chrome-plated brass, PEEK insulator, female solder contacts, C type collet for 6.5 mm diameter cable and nut for fitting a bend relief.

Fixed socket:
EGG.3K.310.CYM = fixed socket, nut fixing, with key (G), 3K series, multipole type with 10 contacts, outer shell in chrome-plated brass, PEEK extended insulator, female crimp contacts.

Fixed coupler:
SLG.3K.310.TLAPV = fixed coupler, nut fixing, keys (L) on the flange end and key (G) at the other end, 3K series, multipole type with 10 contacts, outer shell in stainless steel, PEEK insulator, male-female contacts, vacuumtight.

Part Section Showing Internal Components

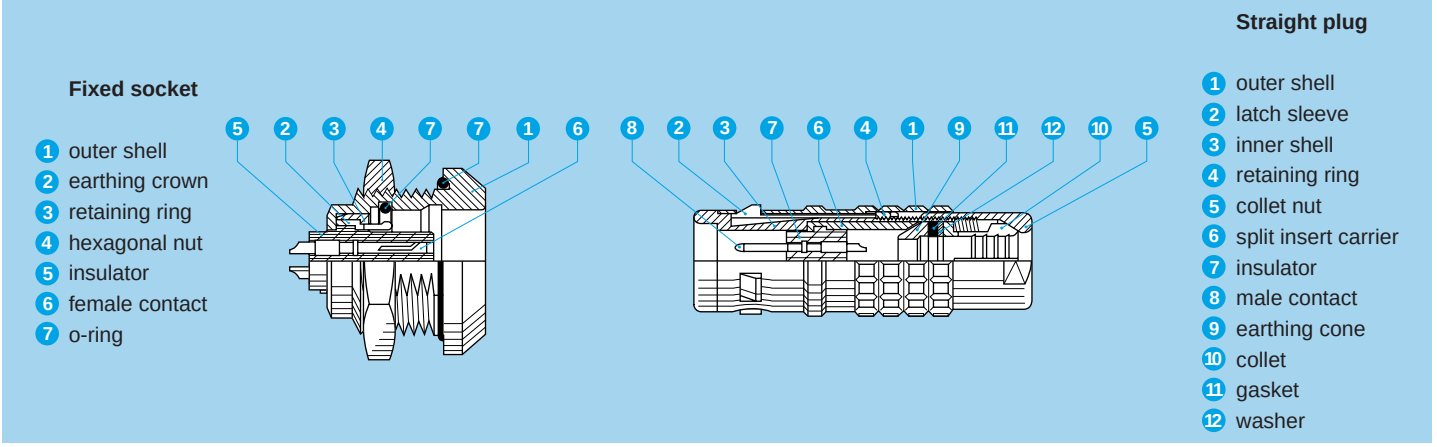

Metal housing models

Technical Characteristics

Mechanical and Climatical

Characteristics	Value	Standard
Endurance	> 5000 cycles	IEC 60512-5 test 9a
Humidity	up to 95% at 60° C	
Temperature range[1)]	- 55° C, +200° C	
Resistance to vibrations	10-2000 Hz, 15 g	IEC 60512-4 test 6d
Shock resistance	100 g, 6 ms	IEC 60512-4 test 6c
Salt spray corrosion test	> 144h	IEC 60512-6 test 11f
Protection index (mated)[2)]	IP 68/IP 66	IEC 60529
Climatical category	50/175/21	IEC 60068-1

Electrical

Characteristics		Value	Standard
Shielding efficiency	at 10 MHz	> 95 dB	IEC 60169-1-3
	at 1 GHz	> 80 dB	IEC 60169-1-3

Note:
the various tests have been carried out with FGG and EGG connector pairs, with chrome-plated brass shell, PEEK insulator and silicone O-ring. Detailed electrical characteristics, as well as materials and treatment are presented in the chapter Technical Characteristics on page 171.
1) minimum operating temperature is -20°C for sockets fitted with an FPM (Viton®) O-ring.
2) IP68 achieved providing that the cable is perfectly circular and that assembly process ensures a high integrity seal.

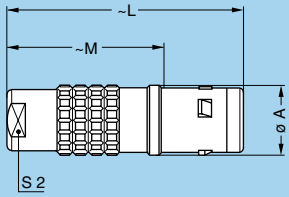

FGG Straight plug, key (G) or keys (A to F, L and R), cable collet

Reference		Dimensions (mm)			
Model	Series	A	L	M	S2
FGG	0K	11	34	23.0	8
FGG	1K	13	42	28.0	9
FGG	2K	16	52	36.0	12
FGG	3K	19	61	41.0	15
FGG	4K	25	71	50.5	19
FGG	5K	38	92	67.0	30

M1 Cable assembly (page 162)

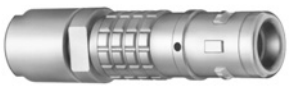

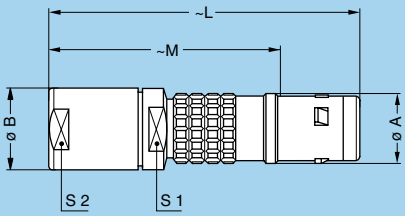

FGG Straight plug, key (G) or keys (A to F, L and R), cable collet and oversize cable collet [1)]

Reference		Dimensions (mm)					
Model	Series	A	B	L	M	S1	S2
FGG	1K	13	14.5	60.0	46	12	12
FGG	2K	16	17.0	68.0	52	15	15
FGG	3K	19	22.0	85.0	65	19	19
FGG	4K	25	36.0	119.5	99	30	32

M2 Cable assembly (page 163)

Note: 1) correspond to K type of collet, the fitting of oversize collets onto this model allows them to be fitted to the cables that can be accommodated by the next housing size up (see page 53).

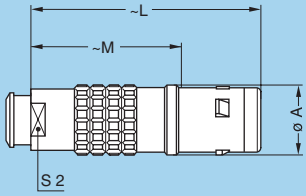

FGG Straight plug, key (G) or keys (A to F, L and R), cable collet and nut for fitting a bend relief [1)]

Reference		Dimensions (mm)			
Model	Series	A	L	M	S2
FGG	0K	11	34	23.0	7
FGG	1K	13	42	28.0	9
FGG	2K	16	52	36.0	12
FGG	3K	19	60	40.0	15
FGG	4K	25	71	50.5	19

M1 Cable assembly (page 162)

Note: 1) to order, add a «Z» at the end of the reference.
The bend relief must be ordered separately (see page 141).

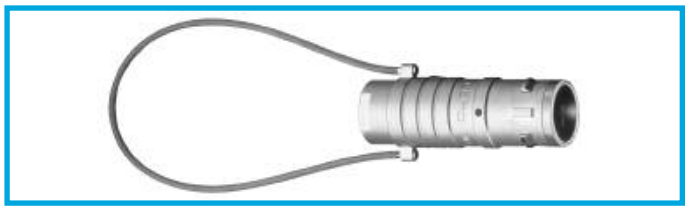

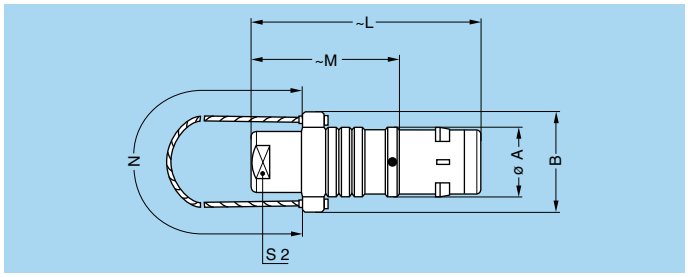

FNG Straight plug, key (G) or keys (A to F and L), cable collet and lanyard release

Reference		Dimensions (mm)					
Model	Series	A	B	L	M	N	S2
FNG	2K	16	22	52	36.0	160	12
FNG	4K	25	32	71	50.5	230	19

M1 Cable assembly (page 162)

Note: cable material: stainless steel with Polyamide sheath

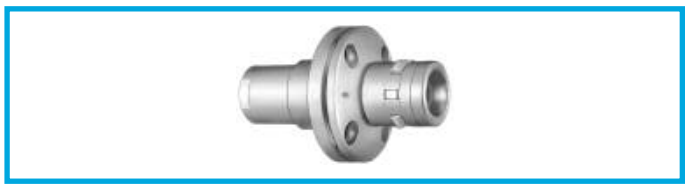

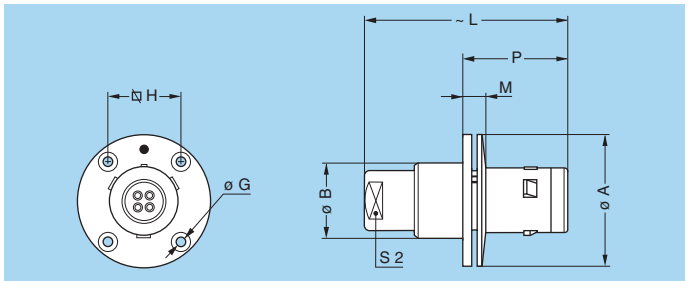

FXG Fixed plug with round flange, key (G) or keys (A to F, L and R) and screw fixing

Reference		Dimensions (mm)							
Model	Series	A	B	G	H	L	M	P	S2
FXG	3K	38	22.5	3.4	20.6	61	10.0	30.0	15
FXG	4K	47	28.5	3.4	27.0	71	11.0	32.0	19
FXG	5K	65	42.5	4.4	38.0	100	12.5	38.5	30

P6 Panel cut-out (page 153)

Note: this model does not include an O-ring behind the flange, it allows the device on which it is fitted to reach only IP50 protection index.
It does not have a cable collet.

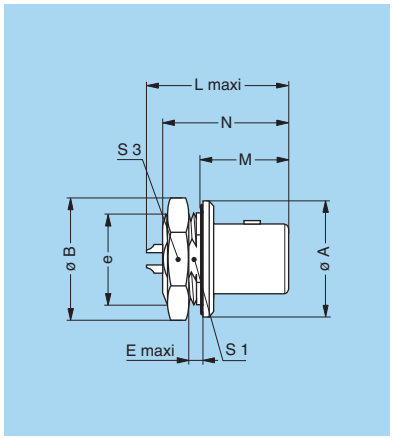

FAG Fixed plug, nut fixing, non-latching, key (G) or keys (A to F, L and R)

Reference		Dimensions (mm)								
Model	Series	A	B	e	E	L	M	N[1)]	S1	S3
FAG	1K	20	21.5	M16x1.0	2.3	22.6	16.0	22.5	14.5	19
FAG	2K	25	27.0	M20x1.0	4.5	33.6	18.0	28.3	18.5	24
FAG	3K	31	34.0	M24x1.0	4.0	34.3	22.5	33.8	22.5	30
FAG	4K	37	40.5	M30x1.0	4.0	35.3	23.0	36.3	28.5	36
FAG	5K	55	54.0	M45x1.5	4.0	43.5	28.5	42.3	42.5	–

P1 Panel cut-out (page 153)

Note: [1)] maximum length with crimp contacts. The 1K series is delivered with a locking washer. The 5K series is delivered with a round nut.

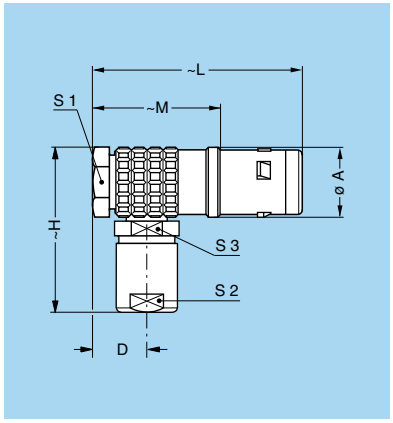

FHG Elbow (90°) plug, key (G) or keys (A to F, L and R), cable collet

Reference		Dimensions (mm)							
Model	Series	A	D	H	L	M	S1	S2	S3
FHG	0K	11.5	7.6	27	36	25.0	10	8	8
FHG	1K	14.0	8.8	33	43	29.0	12	9	10
FHG	2K	17.5	10.5	40	51	35.0	15	12	13
FHG	3K	21.0	11.5	47	60	40.0	18	15	15
FHG	4K	27.5	15.5	57	72	51.5	24	19	20

M3 Cable assembly (page 162)

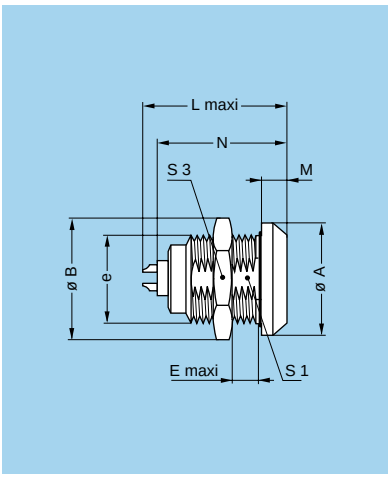

EGG Fixed socket, nut fixing, key (G) or keys (A to F, L and R)

Reference		Dimensions (mm)								
Model	Series	A	B	e	E	L	M	N[1)]	S1	S3
EGG	0K	18	19.2	M14x1.0	6	21.7	4.0	20.1	12.5	17
EGG	1K	20	21.5	M16x1.0	9	27.0	4.5	25.1	14.5	19
EGG	2K	25	27.0	M20x1.0	9	30.7	5.0	28.6	18.5	24
EGG	3K	31	34.0	M24x1.0	11	36.2	6.0	33.6	22.5	30
EGG	4K	37	40.5	M30x1.0	9	40.2	6.5	38.6	28.5	36
EGG	5K	55	54.0	M45x1.5	10	47.5	9.0	43.6	42.5	–

P1 Panel cut-out (page 153)

Note: 1) maximum length with crimp contacts.
The 5K series is delivered with a round nut.

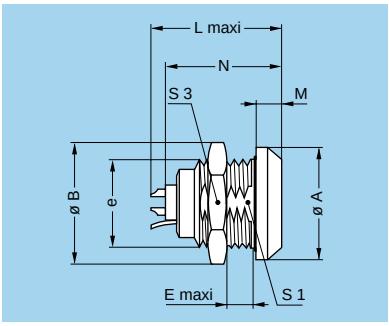

ENG Fixed socket, nut fixing, key (G) or keys (A to F, L and R) and earthing tag

Reference		Dimensions (mm)								
Model	Series	A	B	e	E	L	M	N[1)]	S1	S3
ENG	3K	31	34	M24x1.0	11.3	36.2	6	33.6	22.5	30

P1 Panel cut-out (page 153)

Note: 1) maximum length with crimp contacts.

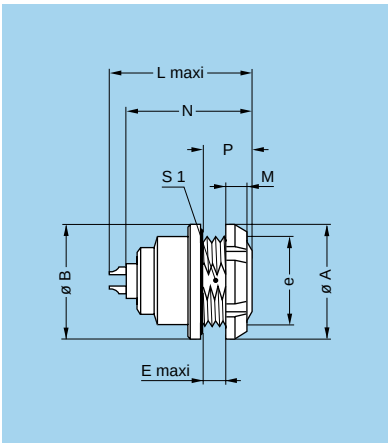

EEG Fixed socket, nut fixing, key (G) or keys (A to F, L and R) (back panel mounting)

Reference		Dimensions (mm)								
Model	Series	A	B	e	E	L	M	N[1)]	P	S1
EEG	0K	18.0	18	M14x1.0	3.4	21.7	3.5	20.1	7.0	12.5
EEG	1K	20.0	20	M16x1.0	6.2	27.0	3.5	25.1	10.0	14.5
EEG	2K	25.0	25	M20x1.0	5.0	30.7	3.5	28.6	10.0	18.5
EEG	3K	30.0	31	M24x1.0	7.5	36.2	4.5	33.6	12.0	22.5
EEG	4K	41.5	37	M30x1.0	6.0	40.2	7.0	38.6	13.5	28.5

P1 Panel cut-out (page 153)

Note: 1) maximum length with crimp contacts.
The 3K and 4K series are delivered with a conical nut.

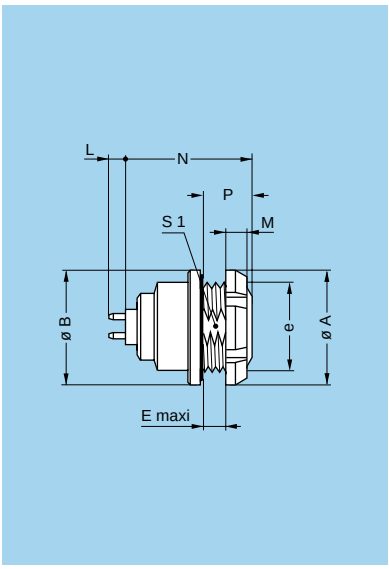

EEG Fixed socket, nut fixing, key (G) or keys (A to F and R) with straight print contacts for printed circuit (back panel mounting)

Reference		Dimensions (mm)							
Model	Series	A	B	e	E	M	N	P	S1
EEG	0K	18.0	18	M14x1.0	3.4	3.5	17.6	7.0	12.5
EEG	1K	20.0	20	M16x1.0	6.2	3.5	23.8	10.0	14.5
EEG	2K	25.0	25	M20x1.0	5.0	3.5	25.8	10.0	18.5
EEG	3K	30.0	31	M24x1.0	7.5	4.5	31.3	12.0	22.5
EEG	4K	41.5	37	M30x1.0	6.0	7.0	34.3	13.5	28.5

P1 Panel cut-out (page 153)

P15 PCB drilling pattern (page 154)

Note: this contact type is available for E●● socket models fitted with female contact.
Length «L» depends on the number of contacts, see table page 156.
The 3K and 4K series are delivered with a conical nut.

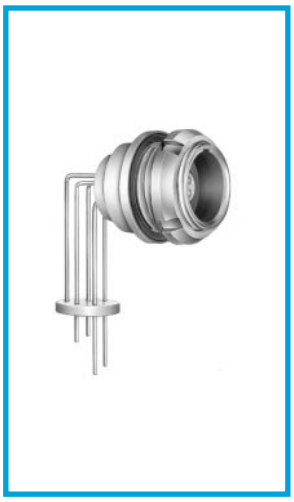

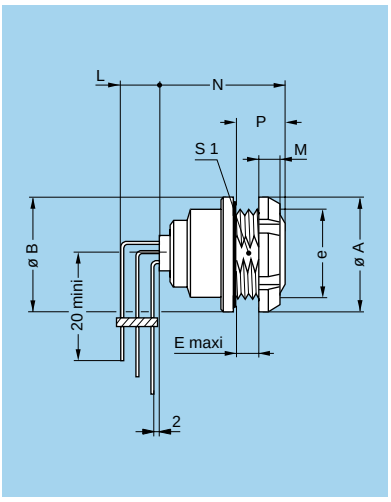

EEG Fixed socket, nut fixing, key (G) or keys (A to F and R) with elbow (90°) contacts for printed circuit (back panel mounting)

Reference		Dimensions (mm)							
Model	Series	A	B	e	E	M	N	P	S1
EEG	0K	18	18	M14x1.0	3.4	3.5	19.3	7	12.5
EEG	1K	20	20	M16x1.0	6.2	3.5	24.3	10	14.5
EEG	2K	25	25	M20x1.0	5.0	3.5	26.6	10	18.5
EEG	3K	30	31	M24x1.0	7.5	4.5	31.3	12	22.5

P1 Panel cut-out (page 153)

P17 PCB drilling pattern (page 157)

Note: length «L» depends on the number of contacts, see PCB drilling pattern page 157. The 3K series is delivered with a conical nut.

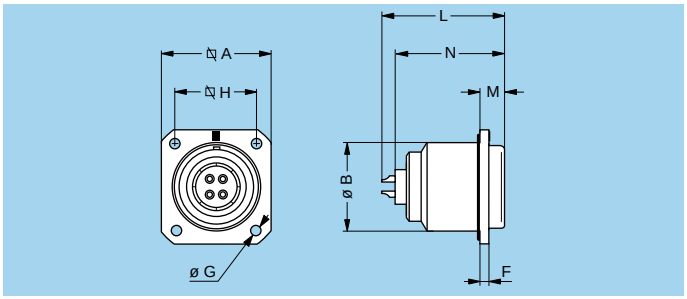

EBG Fixed socket with square flange, key (G) or keys (A to F, L and R) and screw fixing

Reference		Dimensions (mm)							
Model	Series	A	B	F	G	H	L	M	N[1)]
EBG	3K	29	23	3	3.4	23	36.2	6.0	32.6
EBG	4K	37	30	3	3.4	29	40.2	6.5	36.6
EBG	5K	54	45	4	4.4	44	47.5	8.0	42.1

P7 Panel cut-out (page 153)

Note: [1)] maximum length with crimp contacts.

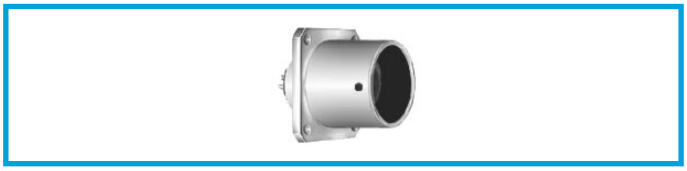

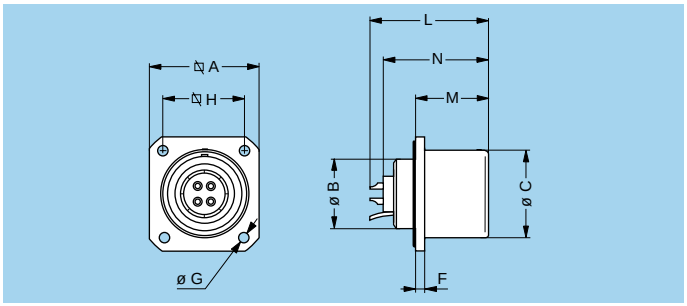

EDG Fixed socket with square flange, key (G) or keys (A to F, L and R), protruding shell and earthing tag, screw fixing

Reference		Dimensions (mm)								
Model	Series	A	B	C	F	G	H	L	M	N[1)]
EDG	3K	29	18	23	3	3.4	23	36.2	22.5	32.6

P7 Panel cut-out (page 153)

Note: [1)] maximum length with crimp contacts.

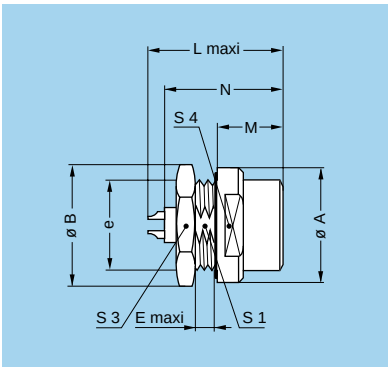

EHG Fixed socket, nut fixing, key (G) or keys (A to F and L), protruding shell

Reference		Dimensions (mm)									
Model	Series	A	B	e	E	L	M	N[1)]	S1	S3	S4
EHG	0K	18	19.2	M14x1.0	1.5	21.7	10.5	20.1	12.5	17	15
EHG	1K	20	21.5	M16x1.0	1.5	27.0	15.5	25.1	14.5	19	17
EHG	2K	25	27.0	M20x1.0	1.5	30.7	17.0	27.1	18.5	24	20

P1 Panel cut-out (page 153)

Note: [1)] maximum length with crimp contacts.

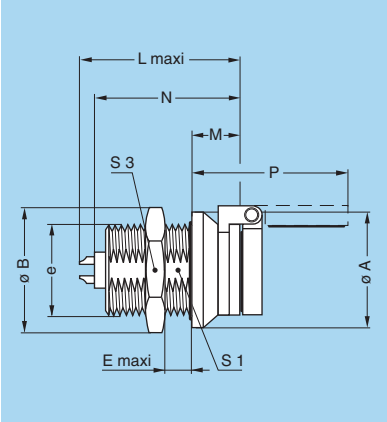

EVG Fixed socket, nut fixing, key (G) or keys (A to F and L) and dust cap (spring loaded)

Reference		Dimensions (mm)									
Model	Series	A	B	e	E	L	M	N[1)]	P	S1	S3
EVG	0K	18	19.2	M14x1.0	6.5	24.8	6.3	23.3	23.3	12.5	17

P1 Panel cut-out (page 153)

Note: [1)] maximum length with crimp contacts.

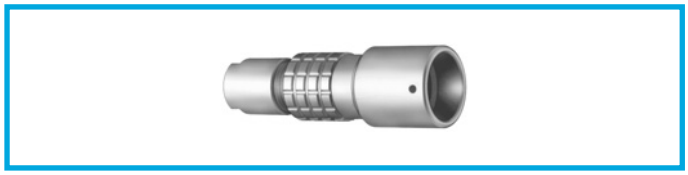

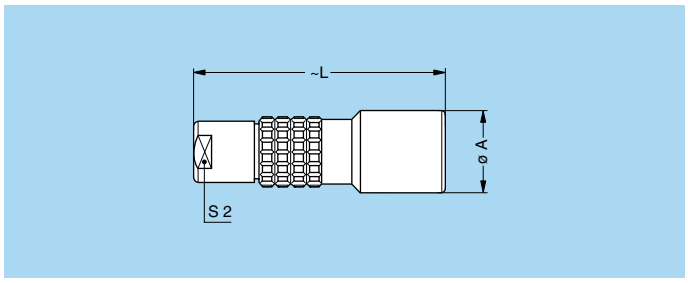

PHG Free socket, key (G) or keys (A to F, L and R), cable collet

Reference		Dimensions (mm)		
Model	Series	A	L	S2
PHG	0K	13	34.0	8
PHG	1K	15	45.0	9
PHG	2K	19	54.0	12
PHG	3K	23	65.0	15
PHG	4K	29	75.5	19
PHG	5K	42	95.0	32

M1 Cable assembly (page 162)

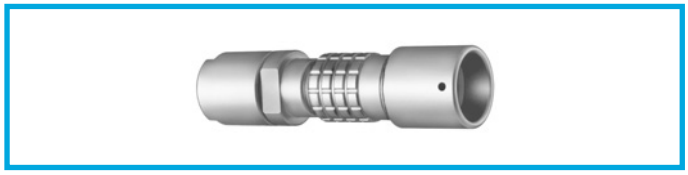

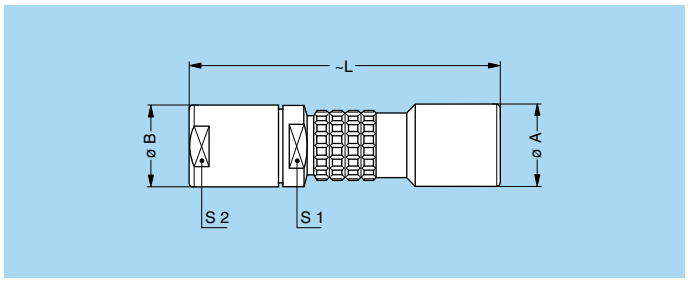

PHG Free socket, key (G) or keys (A to F, L and R), cable collet and oversize cable collet [1)]

Reference		Dimensions (mm)				
Model	Series	A	B	L	S1	S2
PHG	1K	15	14.5	63	12	12
PHG	2K	19	17.0	70	15	15
PHG	3K	23	22.0	89	19	19
PHG	4K	29	36.0	124	30	32

M2 Cable assembly (page 163)

Note: [1)] correspond to K type of collet, the fitting of oversize collets onto this model allows them to be fitted to the cables that can be accommodated by the next housing size up (see page 53).

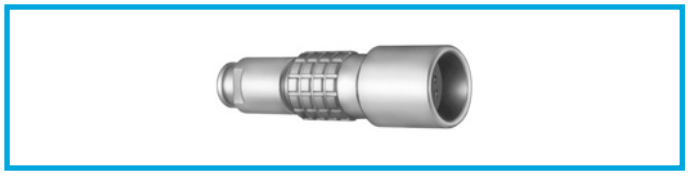

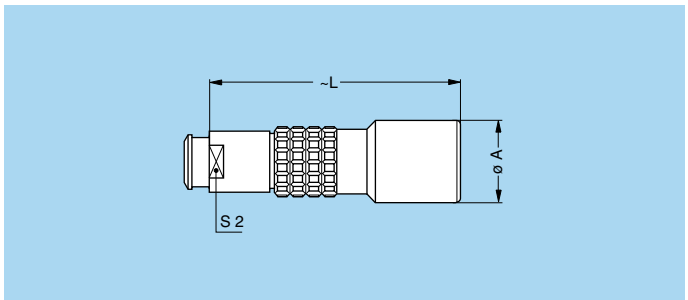

PHG Free socket, key (G) or keys (A to F, L and R), cable collet and nut for fitting a bend relief [1)]

Reference		Dimensions (mm)		
Model	Series	A	L	S2
PHG	0K	13	34.0	7
PHG	1K	15	45.0	9
PHG	2K	19	54.0	12
PHG	3K	23	64.0	15
PHG	4K	29	75.5	19

M1 Cable assembly (page 162)

Note: [1)] to order, add a «Z» at the end of the reference.

The bend relief must be ordered separately (see page 141).

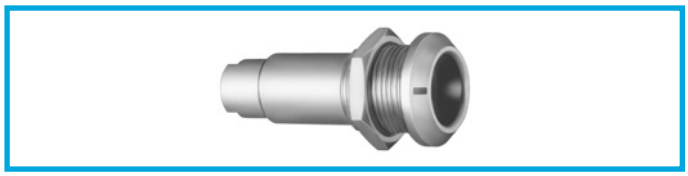

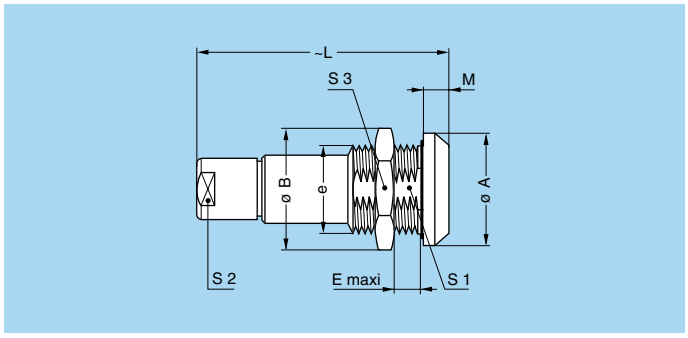

PKG Fixed socket, nut fixing, key (G) or keys (A to F, L and R), cable collet

Reference		Dimensions (mm)								
Model	Series	A	B	e	E	L	M	S1	S2	S3
PKG	0K	18	19.2	M14x1.0	6.0	34.0	4.0	12.5	8	17
PKG	1K	20	21.5	M16x1.0	9.0	45.0	4.5	14.5	9	19
PKG	2K	25	27.0	M20x1.0	9.0	54.0	5.0	18.5	12	24
PKG	3K	31	34.0	M24x1.0	11.5	65.0	6.0	22.5	15	30
PKG	4K	37	40.5	M30x1.0	9.0	75.5	6.5	28.5	19	36
PKG	5K	55	54.0	M45x1.0	15.0	98.0	9.0	42.5	30	–

P1 Panel cut-out (page 153)

M1 Cable assembly (page 162)

Note: the 5K series is delivered with a round nut.

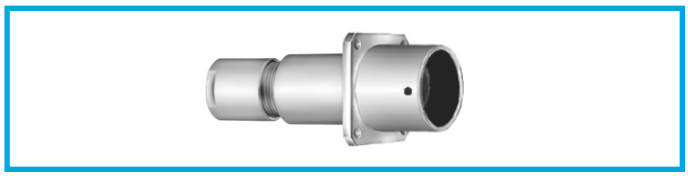

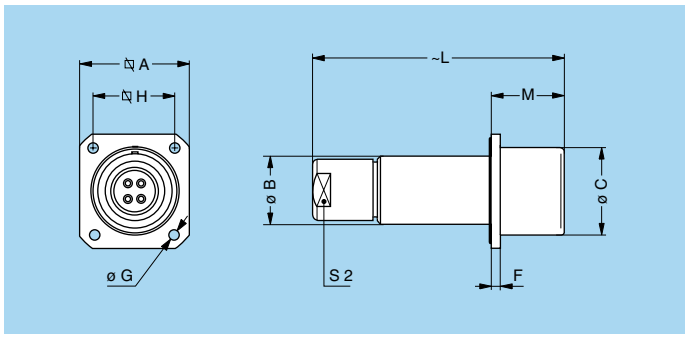

PBG Fixed socket, key (G) with square flange, cable collet and screw fixing

Reference		Dimensions (mm)								
Model	Series	A	B	C	F	G	H	L	M	S2
PBG	3K	29	19	23	3	3.4	23	65	22.5	15

P7 Panel cut-out (page 153)

M1 Cable assembly (page 162)

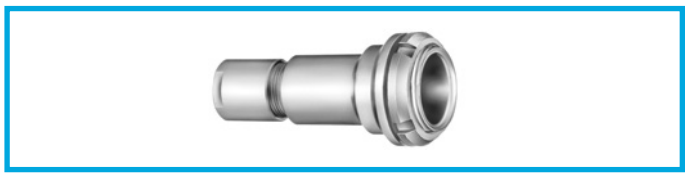

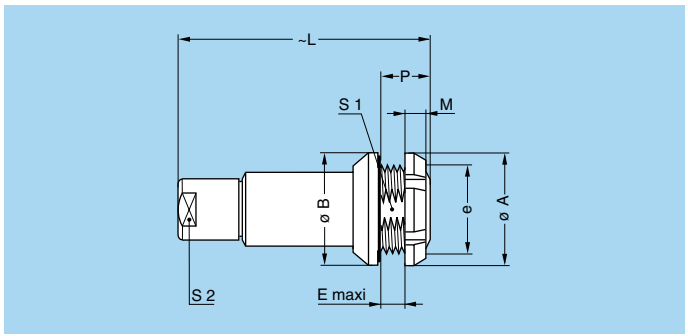

PEG Fixed socket, nut fixing, key (G) or keys (A to F, L and R), cable collet (back panel mounting)

Reference		Dimensions (mm)								
Model	Series	A	B	e	E	L	M	P	S1	S2
PEG	0K	18	18	M14x1.0	5.0	34	3.5	8.5	12.5	8
PEG	1K	20	20	M16x1.0	6.5	45	3.5	10.0	14.5	9
PEG	2K	25	25	M20x1.0	4.0	54	3.5	7.5	18.5	12
PEG	3K	30	31	M24x1.0	7.5	65	4.5	12.0	22.5	15

P1 Panel cut-out (page 153)

M1 Cable assembly (page 162)

Note: the 3K series is delivered with a conical nut.

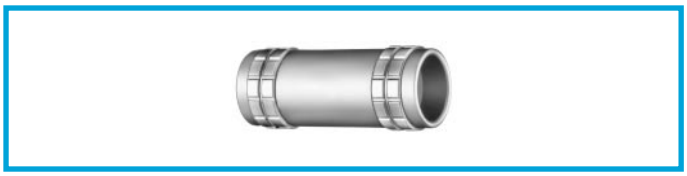

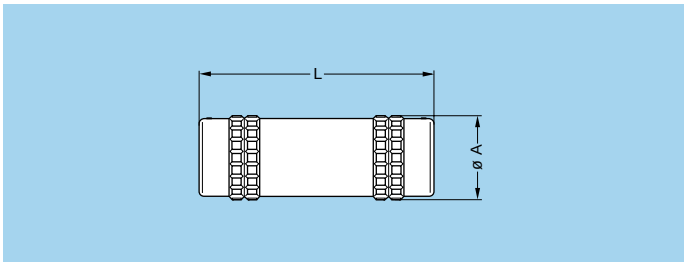

TGL Free coupler, key (G) on one side and keys (L) on the other

Reference	Dim. (mm)	
	A	L
TGL.3K.3●●.CLLP	24	64.2

Note: this model is only available in type 308, 310, 316, 318, 320, 324 and 330.

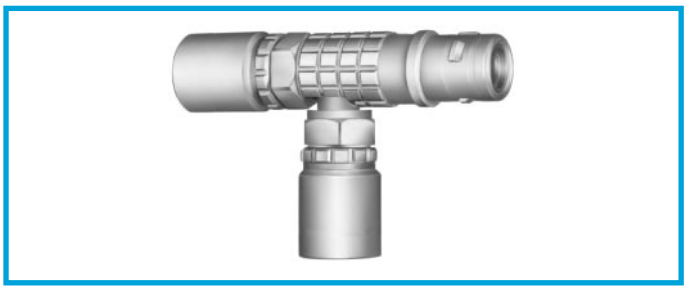

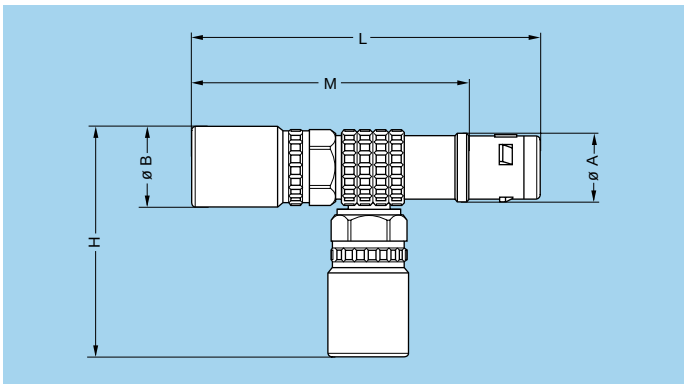

FTG T-plug, key (G) with sockets (90°), key (G)

Reference	Dimensions (mm)				
	A	B	H	L	M
FTG.2K.304.CLF	16	19	48	77	60
FTG.2K.308.CLF	16	19	48	77	60

Watertight or vacuumtight models

These socket and coupler models allow the device on which they are fitted to reach a protection index of IP68 as per IEC 60529. They are fully compatible with plugs of the same series and are widely used for portable radios, military, laboratory equipment, aviation, etc.
These models are identified by a letter «P» at the end of the reference.
Most of these models are also available in a vacuumtight version. Such models are identified by an additional letter «V» at the end of the part number (certificate on request).
Epoxy resin is used to seal these models.

Technical Characteristics

Mechanical and Climatical

Characteristics	Value	Standard
Endurance	> 5000 cycles	IEC 60512-5 test 9a
Humidity	up to 95% at 60° C	
Temperature range (0K-1K)	- 20° C/+100° C	
Temperature range (2K to 5K)	- 20° C/+80° C	
Salt spray corrosion test	> 144h	IEC 60512-6 test 11f
Climatical category	20/80/21	IEC 60068-1
Leakage rate (He)[1)]	$< 10^{-7}$ mbar.l.s^{-1}	IEC 60512-7 test 14b

Note: [1)] only for vacuumtight models.

Characteristics		Value	Standard
Maximum operating pressure[2)]	0K	60 bars	IEC 60512-7 test 14d
	1K	60 bars	
	2K	40 bars	
	3K	30 bars	
	4K	15 bars	
	5K	5 bars	

Note: [2)] this value corresponds to the maximum allowed pressure difference for the assembled socket.

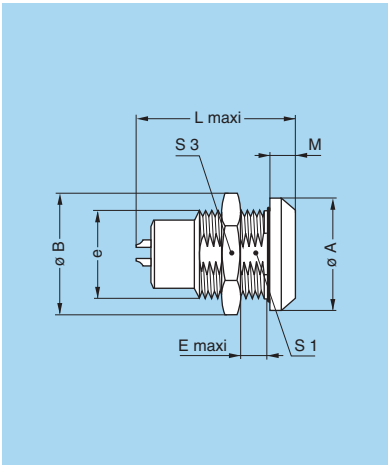

HGG Fixed socket, nut fixing, key (G) or keys (A to F and L), watertight or vacuumtight

Reference		Dimensions (mm)							
Model	Series	A	B	e	E	L	M	S1	S3
HGG	0K	18	19.2	M14x1.0	5.5	23.0	4.0	12.5	17
HGG	1K	20	21.5	M16x1.0	9.0	30.0	4.5	14.5	19
HGG	2K	25	27.0	M20x1.0	13.0	33.7	5.0	18.5	24
HGG	3K	31	34.0	M24x1.0	16.0	41.7	6.0	22.5	30
HGG	4K	37	40.5	M30x1.0	14.0	49.2	6.5	28.5	36
HGG	5K	55	54.0	M45x1.5	10.0	55.7	9.0	42.5	–

P1 Panel cut-out (page 153)

Note: the 5K series is delivered with a round nut.

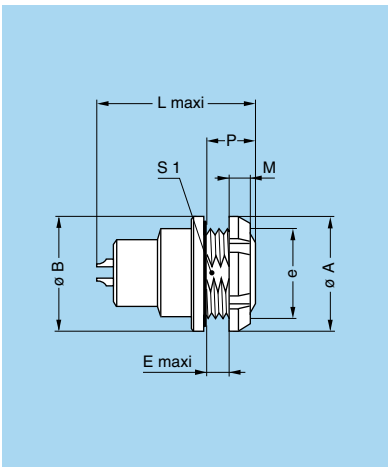

HEG Fixed socket, nut fixing, key (G) or keys (A to F and L), watertight or vacuumtight (back panel mounting)

Reference		Dimensions (mm)							
Model	Series	A	B	e	E	L	M	P	S1
HEG	0K	18	18	M14x1.0	3.4	23.0	3.5	7	12.5
HEG	1K	20	20	M16x1.0	6.2	30.0	3.5	10	14.5
HEG	2K	25	25	M20x1.0	5.0	33.7	3.5	10	18.5

P1 Panel cut-out (page 153)

S●● Fixed coupler, nut fixing, key (G) or keys (L) at the flange end, and key (G) or keys (C or L) at the other end, watertight or vacuumtight

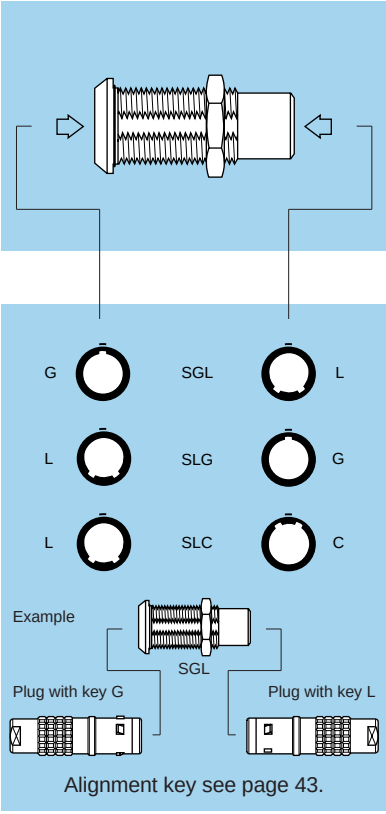

Alignment key see page 43.

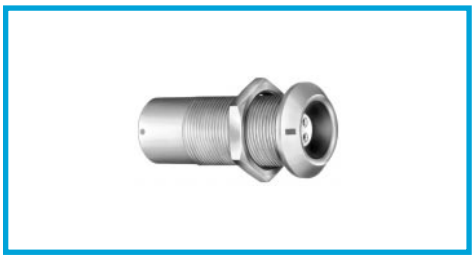

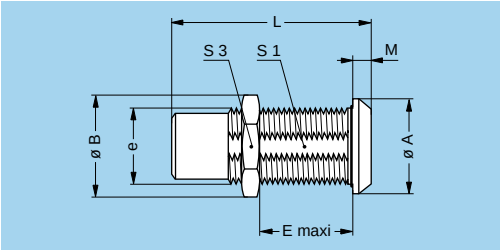

Reference		Contacts	Dimensions (mm)							
Model	Series	Type	A	B	e	E	L	M	S1	S3
SGL	2K	female – male	25	27.0	M20x1.0	25	52.4	5.0	18.5	24
SLG		male – female								
SLG	3K	male – female	31	34.0	M24x1.0	33	64.0	6.0	22.5	30
SLG	4K	male – female	37	40.5	M30x1.0	48	74.0	6.5	28.5	36
SLC										
SLG	5K	male – female	55	54.0	M45x1.5	58	88.0	9.0	42.5	–
SLC										

P1 Panel cut-out (page 153)

Note: for this fixed coupler, the first contact type mentioned is always the one at the flange end.
On request, these couplers can be produced in other series, with other keys.
The 5K series is delivered with a round nut.

Alignment Key (K series)

Alignment Key and Polarized Keying System

K series connector model part numbers are composed of three letters. The LAST LETTER indicates the key position and the contact type (male or female).

Front view of a socket

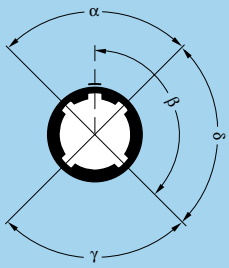

Reference	Nb of keys	Angles	Series 0K	1K	2K	3K	4K	5K	Contact type Plug	Socket	Note
G	1		0°	0°	0°	0°	0°	0°	male	female	●
A	2	α	30°	30°	30°	30°	30°	30°	male	female	●
B	2		45°	45°	45°	45°	45°	45°	male	female	●
C	2		60°	60°	60°	60°	60°	60°	male	female	●
D	2	γ	95°	95°	95°	95°	95°	95°	male	female	○
E	2	β	120°	120°	120°	120°	120°	120°	male	female	○
F	2		145°	145°	145°	145°	145°	145°	male	female	○
L	2	γ	75°	75°	75°	75°	75°	75°	female	male	●

Front view of a socket

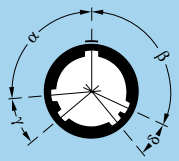

Reference	Nb of keys	Angles	Series 0K	1K	2K	3K	4K	5K	Contact type Plug	Socket	Note
R	5	α	–	–	–	95°	–	–	male	female	●
		β	–	–	–	115°	–	–			
		γ	–	–	–	35°	–	–			
		δ	–	–	–	25°	–	–			

Note: S●● and TGL models are not available with all the keys. For S●● models see explication on page 42.
Please consult the pages corresponding to these models.

● First choice alternative
○ Special order alternative

Insert configuration (B and K series)

Multipole

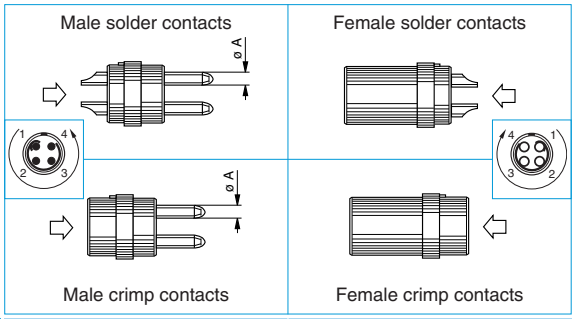

	Reference	Number of contacts	ø A (mm)	Contact type: Solder	Contact type: Crimp	Contact type: Print (straight)	Contact type: Print (elbow)	Solder contact: Test voltage (kV rms)[1] Contact-contact	Solder contact: Test voltage (kV rms)[1] [5] Contact-shell	Crimp contact: Test voltage (kV rms)[1] Contact-contact	Crimp contact: Test voltage (kV rms)[1] [5] Contact-shell	Rated current (A)[1]
00	302	2	0.5	●	●	●	●	1.00	0.95	1.15	1.20	5.0
	303	3	0.5	●	●	●	●	0.80	0.95	1.35	1.10	3.0
	304	4	0.5	●	●	●	●	0.80	0.65	1.05	1.05	2.0
0B 0K	302	2	0.9	●	●	●	●	1.00	1.05	1.45	1.20	10.0[2]
	303	3	0.9	●	●	●	●	1.20	0.90	1.70	1.60	8.0[2]
	304	4	0.7	●	●	●	●	0.85	0.70	1.35	1.10	7.0[2]
	305	5	0.7	●	●	●	●	1.00	0.70	1.25	1.20	6.5[2]
	306	6	0.5	●	○[4]	●	●	0.85	0.65	1.40	1.20	2.5
	307	7	0.5	●	○[4]	●	●	0.80	0.70	1.40	1.20	2.5
	309	9	0.5	●	○[4]	●	○	0.60	0.50	1.00	0.85	2.0
1B 1K	302	2	1.3	●	●	●	●	1.50	1.35	1.70	1.45	15.0[3]
	303	3	1.3	●	●	●	●	1.30	1.55	1.60	1.85	12.0
	304	4	0.9	●	●	●	●	1.35	1.45	1.70	1.80	10.0[2]
	305	5	0.9	●	●	●	●	1.25	1.15	1.30	1.55	9.0[2]
	306	6	0.7	●	●	●	●	1.05	1.20	1.35	1.45	7.0[2]
	307	7	0.7	●	●	●	●	0.95	1.05	1.45	1.45	7.0[2]
	308	8	0.7	●	●	●	●	0.95	1.15	1.30	1.30	5.0
	310	10	0.5	●	○[4]	●	●	0.90	1.50	1.20	1.80	2.5
	314	14	0.5	●	○[4]	●	●	0.80	1.20	0.95	1.60	2.0
	316	16	0.5	●	○[4]	●	○	0.80	1.25	0.95	1.60	1.5

● First choice alternative
○ Special order alternative

Note: [1] see calculation method, caution and suggested standard on page 178.
[2] rated current = 6A for socket with elbow (90°) contact for printed circuit.
[3] rated current = 12A for socket with elbow (90°) contact for printed circuit.
[4] available only for connectors fitted with male contacts.
[5] test voltage (kV) contact-shell is slightly lower for K series (values here are for B series).

Multipole

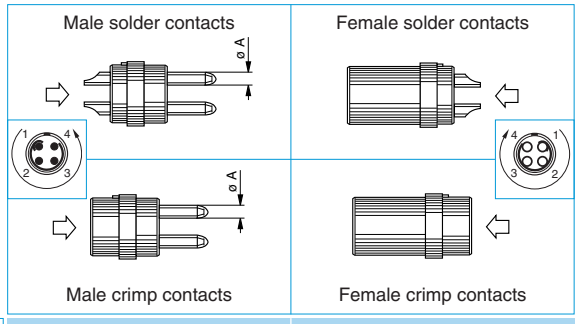

2B
2K

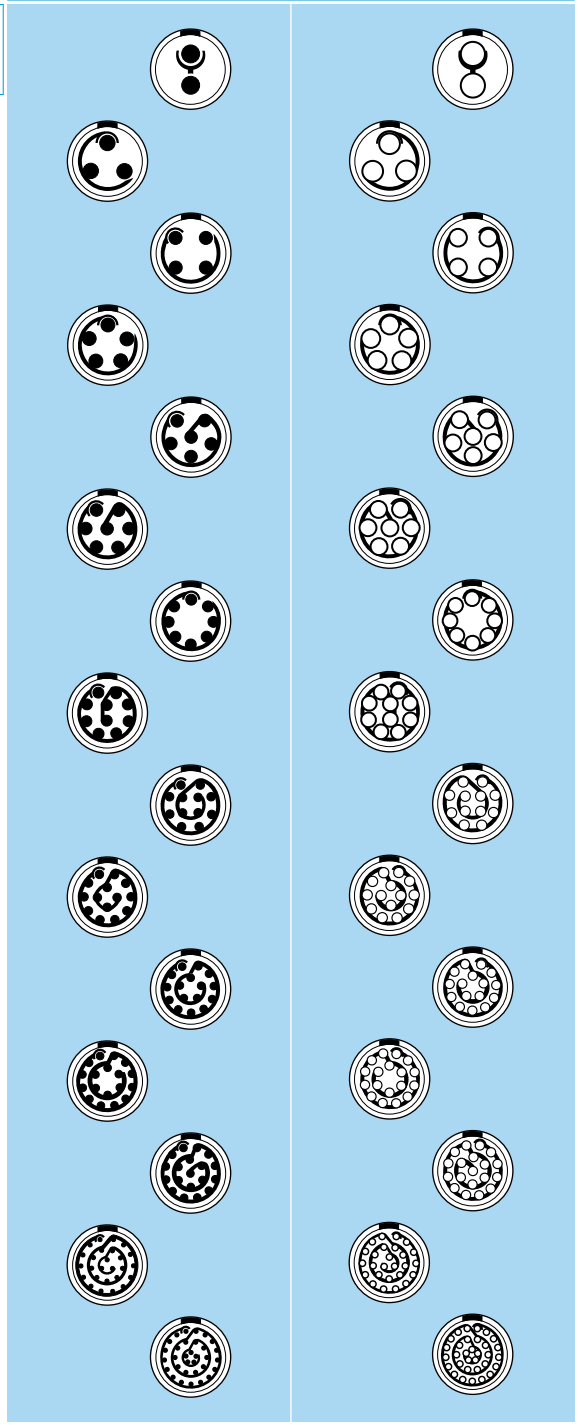

Reference	Number of contacts	ø A (mm)	Contact type: Solder	Contact type: Crimp	Contact type: Print (straight)	Contact type: Print (elbow)	Solder contact: Test voltage (kV rms)[1] Contact-contact	Solder contact: Test voltage (kV rms)[1] [4] Contact-shell	Crimp contact: Test voltage (kV rms)[1] Contact-contact	Crimp contact: Test voltage (kV rms)[1] [4] Contact-shell	Rated current (A)[1]
302	2	2.0	●	●	●	●	2.10	1.75	2.85	2.70	25.0[3]
303	3	1.6	●	●	●	●	2.40	1.85	1.90	1.90	17.0[3]
304	4	1.3	●	●	●	●	1.85	1.85	2.20	2.20	15.0[3]
305	5	1.3	●	●	●	●	1.75	1.60	2.15	2.15	14.0[3]
306	6	1.3	●	●	●	●	1.35	1.45	2.00	2.35	12.0
307	7	1.3	●	●	●	●	1.75	1.60	1.95	2.15	11.0
308	8	0.9	●	●	●	●	1.50	1.25	1.95	1.95	10.0[2]
310	10	0.9	●	●	●	●	1.45	1.30	1.80	2.10	8.0[2]
312	12	0.7	●	●	●	●	1.25	1.35	1.65	2.00	7.0[2]
314	14	0.7	●	●	●	●	1.15	1.35	1.55	1.55	6.5[2]
316	16	0.7	●	●	●	●	0.95	1.25	1.55	1.75	6.0
318	18	0.7	●	●	●	●	0.85	1.20	1.45	2.10	5.5
319	19	0.7	●	●	●	●	0.95	1.25	1.55	1.65	5.0
326	26	0.5	●	–	●	○	0.95	1.30	1.20	1.80	2.0
332	32	0.5	●	–	●	○	0.80	1.2	0.95	1.60	1.5

● First choice alternative
○ Special order alternative

Note: [1] see calculation method, caution and suggested standard on page 178.
[2] rated current = 6A for socket with elbow (90°) contact for printed circuit.
[3] rated current = 12A for socket with elbow (90°) contact for printed circuit.
[4] test voltage (kV) contact-shell is slightly lower for K series (values here are for B series).

Multipole

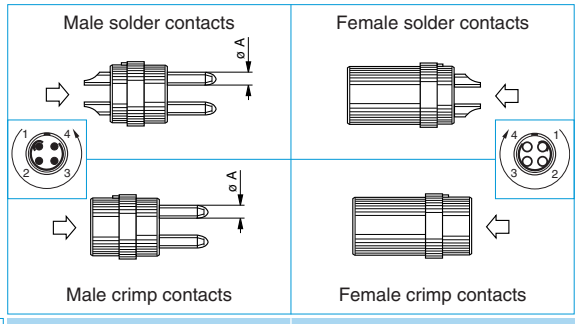

3B
3K

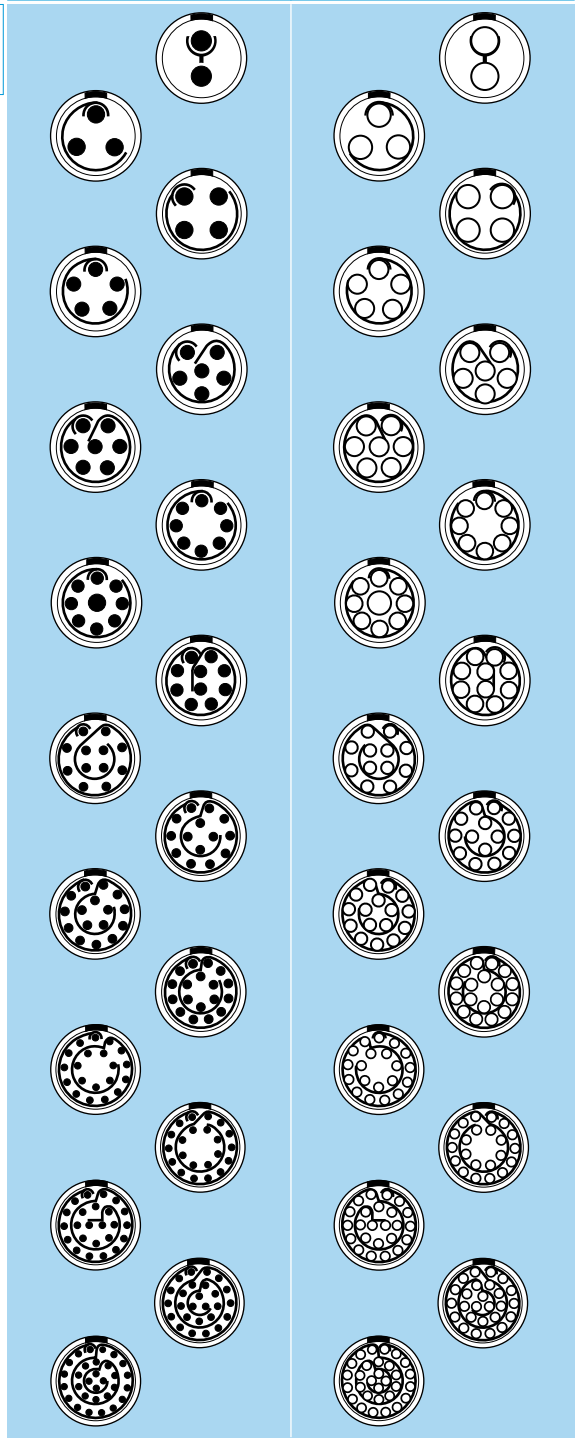

Reference	Number of contacts	ø A (mm)	Contact type: Solder	Contact type: Crimp	Contact type: Print (straight)	Contact type: Print (elbow)	Solder contact: Test voltage (kV rms)[1] Contact-contact	Solder contact: Test voltage (kV rms)[1] [3] Contact-shell	Crimp contact: Test voltage (kV rms)[1] Contact-contact	Crimp contact: Test voltage (kV rms)[1] [3] Contact-shell	Rated current (A)[1]
302	2	3.0	●	●	○	–	2.10	1.55	2.30	1.80	35.0
303	3	2.0	●	●	●	○	1.90	1.50	3.20	2.65	25.0
304	4	2.0	●	●	●	○	1.45	1.25	2.50	2.20	19.0
305	5	1.6	●	●	●	○	1.90	1.25	2.40	1.75	19.0
306	6	1.6	●	●	●	●	1.60	1.15	1.90	1.80	17.0
307	7	1.6	●	●	●	○	1.70	1.25	2.00	2.05	15.0
308	8	1.3	●	●	●	●	1.65	1.15	1.85	1.75	13.0
309	8 1	1.3 2.0	●	●	●	–	1.35 1.35	1.05 1.05	1.10 1.10	1.05 1.05	6.0 15.0
310	10	1.3	●	●	●	●	1.25	0.90	1.50	1.80	12.0
312	12	0.9	●	●	●	●	1.45	1.00	1.65	1.85	9.0
314	14	0.9	●	●	●	●	1.20	1.20	1.80	1.65	9.0[2]
316	16	0.9	●	●	●	●	1.20	0.85	1.80	1.50	8.0
318	18	0.9	●	●	●	●	1.20	1.05	1.85	1.60	7.0
320	20	0.7	●	●	●	●	1.00	0.90	1.35	1.55	6.0
322	22	0.7	●	●	●	○	1.00	0.90	1.70	1.45	5.5
324	24	0.7	●	●	●	●	0.95	0.80	1.35	1.35	4.0
326	26	0.7	●	●	●	○	0.95	0.70	1.50	1.30	4.0
330	30	0.7	●	●	●	●	0.80	0.70	1.35	1.20	3.5

● First choice alternative
○ Special order alternative

Note: [1] see calculation method, caution and suggested standard on page 178.
[2] rated current = 6A for socket with elbow (90°) contact for printed circuit.
[3] test voltage (kV) contact-shell is slightly lower for K series (values here are for B series).

Multipole

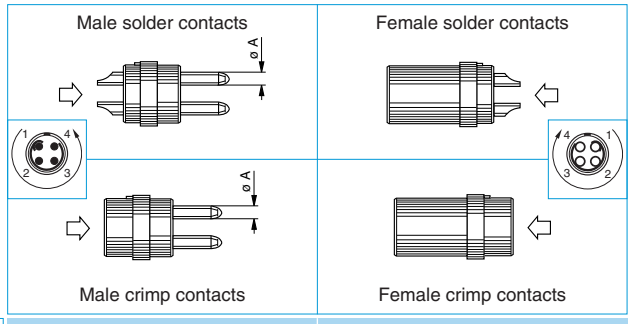

4B
4K

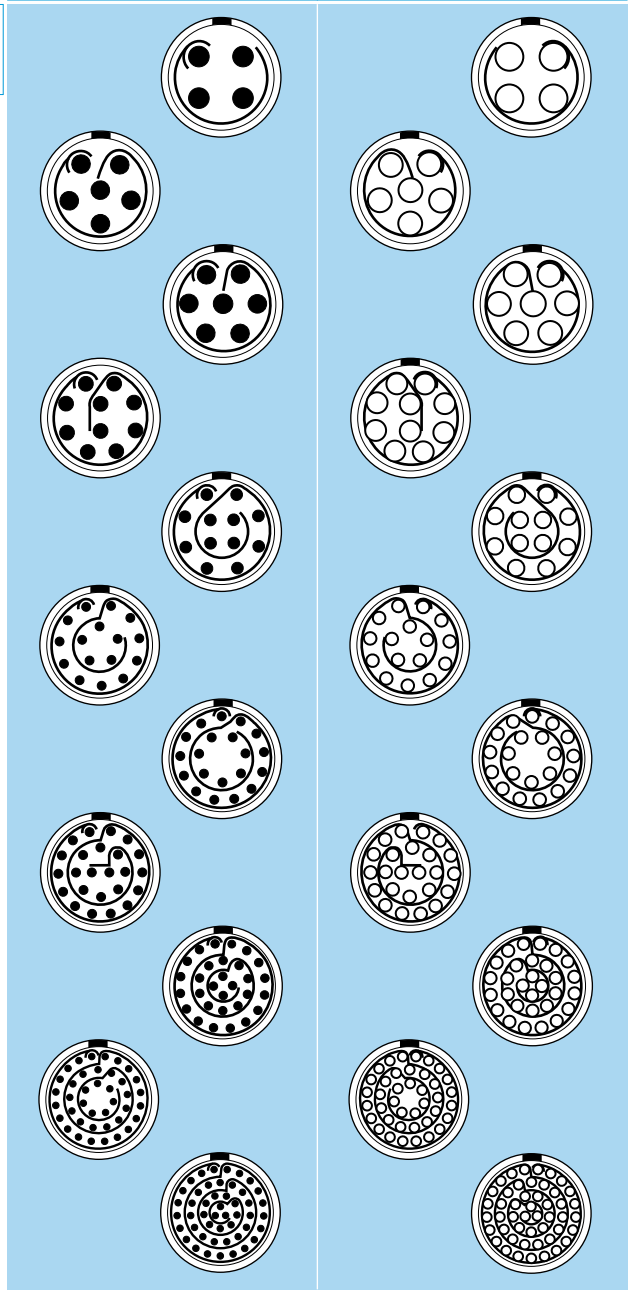

Reference	Number of contacts	ø A (mm)	Contact type: Solder	Contact type: Crimp	Contact type: Print (straight)	Solder contact: Test voltage (kV rms)[1] Contact-contact	Solder contact: Test voltage (kV rms)[1] [2] Contact-shell	Crimp contact: Test voltage (kV rms)[1] Contact-contact	Crimp contact: Test voltage (kV rms)[1] [2] Contact-shell	Rated current (A)[1]
304	4	3.0	●	●	○	2.10	1.50	1.80	1.20	30.0
306	6	2.0	●	●	○	2.00	1.75	2.75	2.40	24.0
307	7	2.0	●	●	○	2.00	1.80	1.50	1.35	20.0
310	10	1.6	●	●	○	1.85	1.30	1.90	1.95	17.0
312	12	1.3	●	●	○	1.45	1.60	1.90	1.85	12.0
316	16	0.9	●	●	●	1.35	1.50	2.30	2.10	10.0
320	20	0.9	●	●	●	1.35	1.00	1.05	0.95	8.0
324	24	0.9	●	●	●	1.20	1.45	1.80	2.05	7.0
330	30	0.9	●	●	●	0.95	0.85	1.75	1.45	5.0
340	40	0.7	●	●	●	0.90	0.90	1.30	1.30	2.0
348	48	0.7	●	●	●	0.70	0.70	1.00	1.00	1.5

● First choice alternative
○ Special order alternative

Note: [1] see calculation method, caution and suggested standard on page 178.
[2] test voltage (kV) contact-shell is slightly lower for K series (values here are for B series).

Multipole

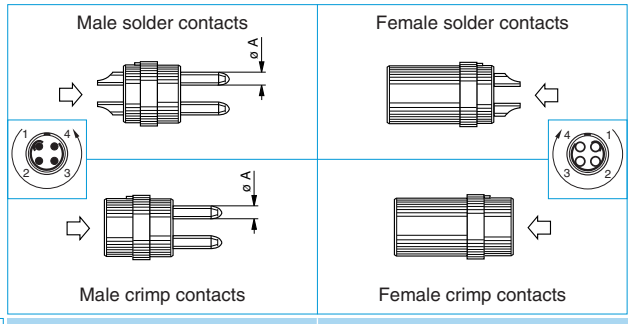

5B
5K

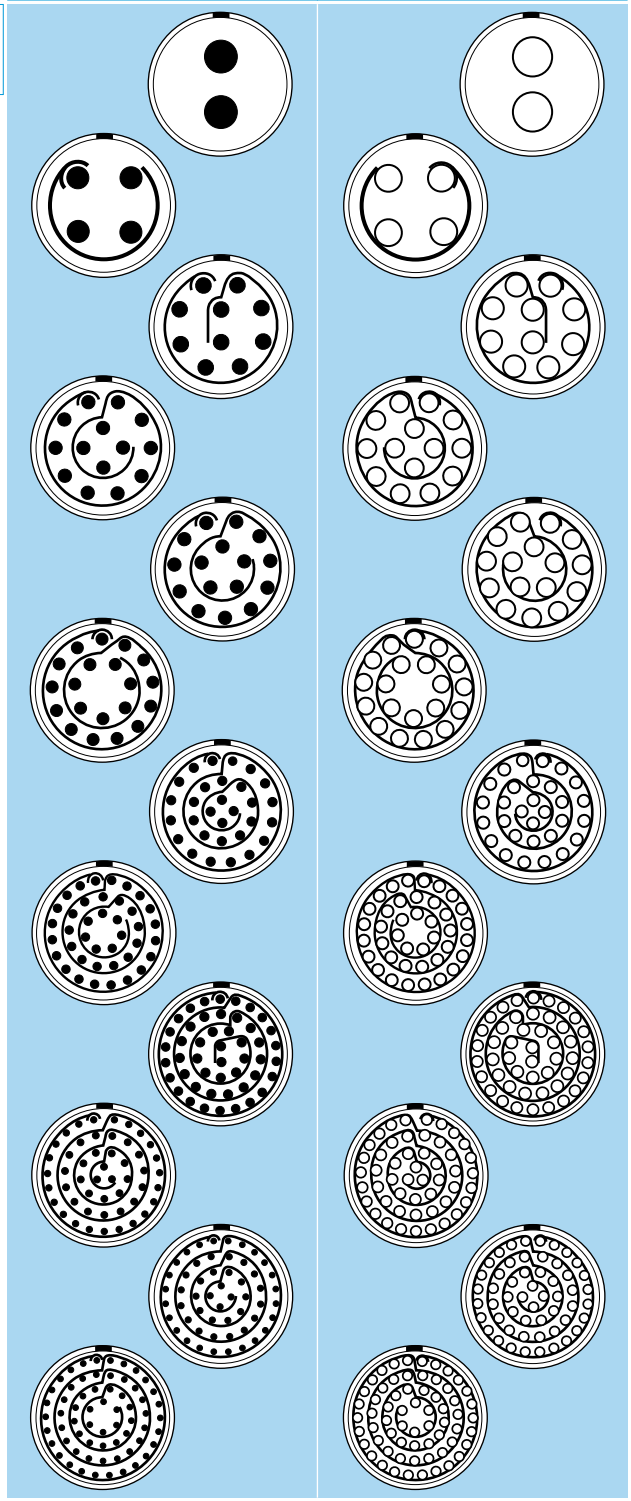

Reference	Number of contacts	ø A (mm)	Contact type: Solder	Contact type: Crimp	Contact type: Print (straight)	Solder contact: Test voltage (kV rms)[1] Contact-contact	Solder contact: Test voltage (kV rms)[1] [2] Contact-shell	Crimp contact: Test voltage (kV rms)[1] Contact-contact	Crimp contact: Test voltage (kV rms)[1] [2] Contact-shell	Rated current (A)[1]
302	2	6.0	●	–	–	3.60	2.95	–	–	50.0
304	4	4.0	●	●	○	2.95	2.65	3.20	2.40	35.0
310	10	3.0	●	●	○	2.35	2.30	2.65	3.20	20.0
314	14	2.0	●	●	○	2.10	2.00	2.85	2.95	18.0
316	16	2.0	●	●	○	1.85	1.95	2.45	3.05	12.0
320	20	1.6	●	●	○	1.90	1.70	2.20	2.40	10.0
330	30	1.3	●	●	○	1.45	1.60	2.05	2.45	8.0
340	40	1.3	●	●	○	1.30	1.45	2.00	1.95	7.0
348	48	1.3	●	●	●	1.20	1.10	2.00	1.55	6.0
350	50	0.9	●	●	●	1.30	1.60	1.20	1.45	6.0
354	54	0.9	●	●	●	1.15	1.55	2.00	2.10	5.0
364	64	0.9	●	●	●	1.30	1.55	1.35	1.85	3.0

● First choice alternative
○ Special order alternative

Note: [1] see calculation method, caution and suggested standard on page 178.
[2] test voltage (kV) contact-shell is slightly lower for K series (values here are for B series).

Housings (B and K series)

Ref.	Outer shell and collet nut		Latch sleeve + earthing crown		Other metallic components		Remarks	Note
	Material	Surf. treatment	Material	Surf. treatment	Material	Surf. treatment		
C	Brass	chrome	brass/bronze	nickel 2)	brass	nickel		●
N	Brass	nickel	brass/bronze	nickel 2)	brass	nickel		○
K	Brass	black chrome	brass/bronze	nickel 2)	brass	nickel		●
S	Stainless steel	–	brass/bronze	nickel 2)	brass	nickel		●
T	Stainless steel	–	stainless steel	–	brass	nickel		○
U	Stainless steel	–	stainless steel	–	stainless steel	–		○
L	Aluminium alloy	anodized	brass/bronze	nickel 2)	brass	nickel	1)	○
X	Aluminium alloy	nickel anthracite	brass/bronze	nickel 2)	brass	nickel		○
G	PEEK (natural)	–	brass/bronze	nickel 2)	brass	nickel	Only for FGG and ENG (B series)	●
P	PSU	–	brass/bronze	nickel 2)	brass	nickel	Only for FGY and ENY (B series) 1)	●
R	PPSU	–	brass/bronze	nickel 2)	brass	nickel	Only for FGY and ENY (B series) 1)	●
H	PPS/brass	–/nickel	brass/bronze	nickel 2)	brass	nickel	Only for elbow sockets (B series)	●
P	PA.6	–	brass/bronze	nickel 2)	brass	nickel	Only for CRF and CRG bridge plug 1)	●

Note: detailed characteristics of these materials and treatments are presented on page 171.
1) see «variant» for the colour.
2) in the K series, the latch sleeve is chrome-plated.

● First choice alternative
○ Special order alternative

Insulators (B and K series)

Ref.	Material	Contact type	Remarks	Note
Y	PEEK	Crimp	extended design, with contacts that recess into insulator	●
L	PEEK	Solder or print		●

Note: detailed characteristics of these materials are presented on page 175.

Contacts (B and K series)

Soldering characteristics

- no need to order specific tools, a simple soldering iron is sufficient
- ideal for very small and fragile conductors
- contacts with solder cups to allow the solder to flow

Crimping characteristics

- practical, quick contact fixing outside the insulator
- possible use at high temperature
- need to order specific tools
- no risk of heating the insulator during the conductor-contact fixing
- high tensile strength
- totally lead-free solution

Note: see page 176 for more information.

Contacts reference for plugs, free or fixed sockets

Contact type	Reference		Contact			Conductor						F_r [1] (N)	Notes
						Solid		Stranded					
								AWG		Section (mm²)			
	Male	Female	ø A (mm)	ø C (mm)	Form per fig.	AWG max.	Section max. (mm²)	min.	max.	min.	max.		
Solder 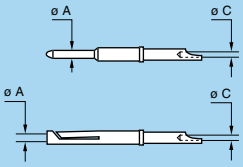	A	L	0.5[2]	0.40[2]	–	28	0.09	–	30	–	0.05	–	●
			0.5	0.45	–	28	0.09	–	28	–	0.09	–	
			0.7	0.80[5]	–	22[5]	0.34[5]	–	22[3][5]	–	0.34[5]	–	
			0.9	0.80	–	22	0.34	–	22[3]	–	0.34	–	
			1.3	1.00	–	20	0.50	–	20[3]	–	0.50	–	
			1.6	1.40	–	16	1.00	–	18	–	1.00	–	
			2.0	1.80	–	14	1.50	–	16	–	1.50	–	
			3.0	2.70	–	10	4.00	–	12	–	4.00	–	
			4.0	3.70	–	10	6.00	–	10	–	6.00	–	
			6.0	5.20	–	–	–	–	8	–	10.00	–	
fig. 1 Crimp 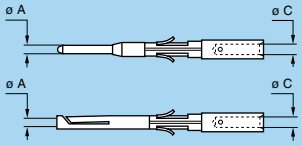	C	M	0.5[4]	0.45	1	–	–	32	28	0.035	0.09	12	●
	C	M	0.7	0.80	1	–	–	26	22[3]	0.140	0.34	22	●
	B	P		0.45	2	–	–	32	28	0.035	0.09		○
	C	M	0.9	1.10	1	–	–	24	20	0.250	0.50	30	●
	B	P		0.80	2	–	–	26	22[3]	0.140	0.34		○
	G	U		0.45	2	–	–	32	28	0.035	0.09		○
fig. 2 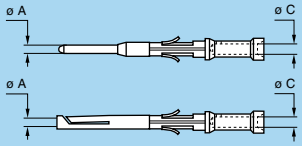	C	M	1.3	1.40	1	–	–	20	18	0.500	1.00	40	●
	B	P		1.10	2	–	–	24	20	0.250	0.50		○
	G	U		0.80	2	–	–	26	22[3]	0.140	0.34		○
	C	M	1.6	1.90	1	–	–	18	14[3]	1.000	1.50	50	●
	B	P		1.40	2	–	–	22	18	0.340	1.00		○
	C	M	2.0	2.40	1	–	–	16	12[3]	1.500	2.50	65	●
	B	P		1.90	2	–	–	18	14	1.000	1.50		○
	C	M	3.0	2.90	1	–	–	14	10[3]	2.500	4.00	75	●
	C	M	4.0	4.00	1	–	–	12	10	4.000	6.00	90	●
Print 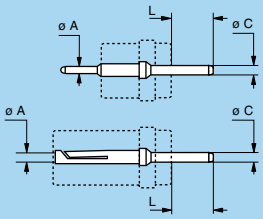	D	N	L dimensions and C are detailed in the section on PCB drilling pattern. See page 156.										●
Print (elbow) 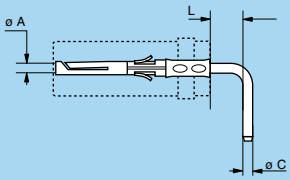	V	V	L dimensions and C are detailed in the section on PCB drilling pattern. See page 157.										●

Note: [1] contact retention force in the insulator (according to IEC 60512-8 test 15 a).
[2] for 00 multipole series.
[3] for a given AWG, the diameter of some stranded conductor designs is larger than the solder cup diameter. Make sure that the maximum conductor diameter is smaller than ø C.
[4] available only for 00 multipole series and connectors fitted with male contacts of the 0B and 1B series.
[5] for 0B.304/0B.305 and 0K.304/0K.305 ø C = 1.0 mm, AWG max 20, section max (mm²) 0.50.

● First choice alternative ○ Special order alternative

Contacts reference for couplers R●●, S●● and TGL

Ref.	Contact type	Remarks
A	Male - Female	contact configuration is explained on page 21, 28, 42
L	Female - Male	contact configuration is explained on page 21, 28, 42
M	Female - Female	contact configuration is explained on page 21

Collets (B and K series)

D and M type collets for B series

D type

M type

	Reference		Collet ø		Cable ø		Notes
	Type	Code	ø A	ø B	max.	min.	
00	D	22	2.2	–	2.2	1.4	NEW
	D	27	2.7	–	2.7	> 2.2	NEW
	D	35	3.5	2.8	3.5	> 2.7	NEW
0B	D	21	2.1	–	2.2	1.4	NEW
	D	31	3.1	–	3.2	> 2.2	NEW
	D	42	4.2	–	4.2	> 3.2	NEW
	D	52	5.2	4.7	5.2	> 4.2	NEW
	D	56	5.6	4.7	5.6	> 5.2	NEW[1)]
1B	M	27	2.7	–	2.7	> 2.2	NEW
	M	31	3.1	–	3.1	> 2.7	NEW
	D	42	4.2	–	4.2	3.1	NEW
	D	52	5.2	–	5.2	> 4.2	NEW
	D	62	6.2	–	6.2	> 5.2	NEW
	D	72	7.2	6.2	7.2	> 6.2	NEW
	D	76	7.6	6.9	7.6	> 7.2	NEW[1)]
2B	M	21	2.1	–	2.2	1.4	NEW
	M	31	3.1	–	3.2	> 2.2	NEW
	D	42	4.2	–	4.2	> 3.2	NEW
	D	52	5.2	–	5.2	> 4.2	NEW
	D	62	6.2	–	6.2	> 5.2	NEW
	D	72	7.2	–	7.2	> 6.2	NEW
	D	82	8.2	–	8.2	> 7.2	NEW
	D	92	9.2	8.6	9.2	> 8.2	NEW
	D	99	9.9	8.6	9.9	> 9.2	NEW[1)]

	Reference		Collet ø		Cable ø		Notes
	Type	Code	ø A	ø B	max.	min.	
3B	M	52	5.2	–	5.2	> 4.2	NEW
	D	62	6.2	–	6.2	4.9	NEW
	D	72	7.2	–	7.7	> 6.2	NEW
	D	92	9.2	–	9.2	> 7.7	NEW
	D	10	10.2	–	10.0	> 9.2	NEW
	D	12	12.0	10.2	11.9	10.8	NEW[1)]
4B	M	62	6.2	–	6.2	4.9	
	M	72	7.2	–	7.7	> 6.2	
	M	92	9.2	8.6	9.2	> 7.7	
	D	10	10.8	–	10.5	9.1	
	D	12	12.3	–	12.0	10.6	
	D	13	13.8	12.5	13.5	12.1	
	D	15	15.3	12.5	15.0	13.6	
	D	16	16.3	12.5	16.0	15.1	1)
5B	D	11	11.8	–	11.5	9.6	
	D	13	13.8	–	13.5	11.6	
	D	15	15.8	–	15.5	13.6	
	D	17	17.8	–	17.5	15.6	1)
	D	19	19.8	–	19.5	17.6	1)
	D	21	21.8	–	21.5	19.6	1)
	D	23	23.8	21.8	23.5	21.6	1)
	D	25	25.3	21.8	25.0	23.6	1)

Note: all dimensions are in millimetres.
1) these collets cannot be used for connector models with nut for fitting a bend relief.

C and K type collets for K series

C type

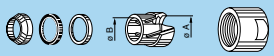

K type
oversize
cable collet

	Reference		Collet ø		Cable ø	
	Type	Code	ø A	ø B	max.	min.
0K	C	10	1.6	–	1.2	1.0
	C	15	1.6	–	1.5	1.3
	C	20	2.1	–	2.0	1.6
	C	25	3.1	–	2.5	2.1
	C	30	3.1	–	3.0	2.6
	C	35	4.2	4.2	3.5	3.1
	C	40	4.2	4.2	4.0	3.6
	C	45	5.2	5.2	4.5	4.1
	C	50	5.2	5.2	5.0	4.6
1K	C	15	1.6	–	1.5	1.3
	C	20	2.2	–	2.0	1.6
	C	25	3.2	–	2.5	2.1
	C	30	3.2	–	3.0	2.6
	C	35	4.2	–	3.5	3.1
	C	40	4.2	–	4.0	3.6
	C	45	5.2	–	4.5	4.1
	C	50	5.2	–	5.0	4.6
	C	55	6.2	6.2	5.5	5.1
	C	60	6.2	6.2	6.0	5.6
	C	65	7.2	6.7	6.5	6.1
	K	70	7.2	–	7.0	6.6
	K	75	8.2	8.2	7.5	7.1
	K	80	8.2	8.2	8.0	7.6
	K	85	9.2	8.6	8.5	8.1
2K	C	15	2.2	–	1.5	1.3
	C	20	2.2	–	2.0	1.6
	C	25	3.2	–	2.5	2.1
	C	30	3.2	–	3.0	2.6
	C	35	4.2	–	3.5	3.1
	C	40	4.2	–	4.0	3.6
	C	45	5.2	–	4.5	4.1
	C	50	5.2	–	5.0	4.6
	C	55	6.2	–	5.5	5.1
	C	60	6.2	–	6.0	5.6
	C	65	7.2	–	6.5	6.1
	C	70	7.2	–	7.0	6.6
	C	75	8.2	8.2	7.5	7.1
	C	80	8.2	8.2	8.0	7.6
	C	85	9.2	8.6	8.5	8.1
	K	90	9.2	–	9.0	8.6
	K	95	10.2	10.2	9.5	9.1
	K	10	10.2	10.2	10.0	9.6
	K	11	11.2	10.6	10.5	10.1
3K	C	30	3.2	–	3.0	2.6
	C	35	4.2	–	3.5	3.1
	C	40	4.2	–	4.0	3.6
	C	45	5.2	–	4.5	4.1
	C	50	5.2	–	5.0	4.6
	C	55	6.2	–	5.5	5.1
	C	60	6.2	–	6.0	5.6
	C	65	7.2	–	6.5	6.1

	Reference		Collet ø		Cable ø	
	Type	Code	ø A	ø B	max.	min.
3K	C	70	7.2	–	7.0	6.6
	C	75	8.2	–	7.5	7.1
	C	80	8.2	–	8.0	7.6
	C	85	9.2	–	8.5	8.1
	C	90	9.2	–	9.0	8.6
	C	95	10.2	10.2	9.5	9.1
	C	10	10.2	10.2	10.0	9.6
	C	11	11.2	10.6	10.5	10.1
	K	11	12.3	–	12.0	10.6
	K	12	13.8	13.8	12.8	12.1
	K	13	13.8	13.8	13.5	12.9
	K	14	15.3	15.3	14.0	13.6
	K	15	15.3	15.3	15.0	14.1
4K	C	50	6.3	–	5.0	4.6
	C	55	6.3	–	5.5	5.1
	C	60	6.3	–	6.0	5.6
	C	65	7.3	–	6.5	6.1
	C	70	7.3	–	7.0	6.6
	C	75	8.3	–	7.5	7.1
	C	80	8.3	–	8.0	7.6
	C	85	9.3	–	8.5	8.1
	C	90	9.3	–	9.0	8.6
	C	95	10.8	–	9.5	9.1
	C	10	10.8	–	10.5	9.6
	C	11	12.3	–	12.0	10.6
	C	12	13.8	13.8	12.8	12.1
	C	13	13.8	13.8	13.5	12.9
	C	14	15.3	15.3	14.0	13.6
	C	15	15.3	15.3	15.0	14.1
	K	16	17.8	–	16.5	15.6
	K	17	17.8	–	17.5	16.6
	K	18	19.8	–	18.5	17.6
	K	19	19.8	–	19.5	18.6
	K	20	21.8	–	20.5	19.6
	K	21	21.8	–	21.5	20.6
	K	22	23.8	23.8	22.5	21.6
	K	23	23.8	23.8	23.5	22.6
5K	C	10	11.8	–	10.5	9.6
	C	11	11.8	–	11.5	10.6
	C	12	13.8	–	12.5	11.6
	C	13	13.8	–	13.5	12.6
	C	14	15.8	–	14.5	13.6
	C	15	15.8	–	15.5	14.6
	C	16	17.8	–	16.5	15.6
	C	17	17.8	–	17.5	16.6
	C	18	19.8	–	18.5	17.6
	C	19	19.8	–	19.5	18.6
	C	20	21.8	–	20.5	19.6
	C	21	21.8	–	21.5	20.6
	C	22	23.8	23.8	22.5	21.6
	C	23	23.8	23.8	23.5	22.6

Note: all dimensions are in millimetres.

Variant (B and K series)

Bend relief for B series models with collet

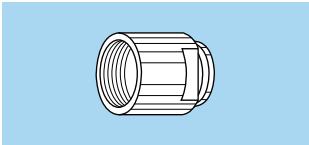

Need to be ordered

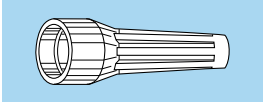

	Ref.	Collet		Need to be ordered separately (see pages 141 and 142)
		Type	Code	
00	Z	D	22 to 35	GMA.00.●●●.●● GMB.00.●●●.●●
0B	Z	D	21 to 52	GMA.0B.●●●.●●
1B	Z	M	27 and 31	GMA.1B.●●●.●●
		D	42 to 72	GMA.1B.●●●.●●
2B	Z	M	21 and 31	GMA.0B.●●●.●●
		D	42 to 92	GMA.2B.●●●.●●
3B	Z	M	52	GMA.1B.●●●.●●
		D	62 to 10	GMA.3B.●●●.●●
4B	Z	M	62 and 72	GMA.2B.●●●.●●
		M	92	GMA.4B.●●●.●●
		D	10 to 15	GMA.4B.●●●.●●
5B	Z	D	11 to 15	GMA.4B.●●●.●●

Bend relief for K series models with collet

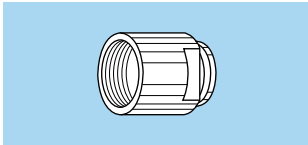

Need to be ordered

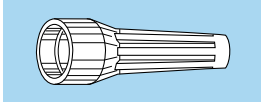

	Ref.	Collet		Need to be ordered separately (see pages 141 and 142)
		Type	Code	
0K	Z	C	10 to 50	GMA.0B.●●●.●●
1K	Z	C	15 to 65	GMA.1B.●●●.●●
		K	70 to 85	GMA.2B.●●●.●●
2K	Z	C	15 to 85	GMA.2B.●●●.●●
		K	90 to 10	GMA.3B.●●●.●●
3K	Z	C	30 to 10	GMA.3B.●●●.●●
		K	11 to 15	GMA.4B.●●●.●●
4K	Z	C	50 to 15	GMA.4B.●●●.●●

Note: All dimensions are in millimetres.

Colour of the bridge plug shells and connectors shell made of plastic material and aluminium alloys

Reference	Colour	Bridge plug and plastic shell			Aluminium alloys	
		PSU	PPSU	PA.6	Anodized colour	Anodized colour for bend relief collet nut
A	blue			●	●	
B	white	●		●		
G	grey	●		●		
J	yellow			●	●	
M	brown			●		
N	black			●	●	
R	red			●	●	
S	orange			●		
T	natural				●	
V	green			●	●	
L	black					●
X	natural					●
F	cream		●			

Note: other anodizing colours are available for connectors with collet nut for bend relief. Please consult us.

Watertight and vacumtight socket and coupler models (B and K series)

	Model	Reference	
		Watertight	Vacuumtight
B	YH●, HG●, HN●, HH●, HC●, HE●, HM●, S●●	P	PV
K	HG●, HE●, S●●	P	PV

O-ring and gasket material (K series)

Standard connectors are delivered with silicone o-ring and gaskets. The vacuumtight models, identified with the letter «PV», are delivered with Viton® gaskets. Other gaskets material can be delivered upon special request.

O-ring material	Reference
FPM (Viton®)	H
EPDM	E
FPM (Viton®) and collet nut for bend relief	D

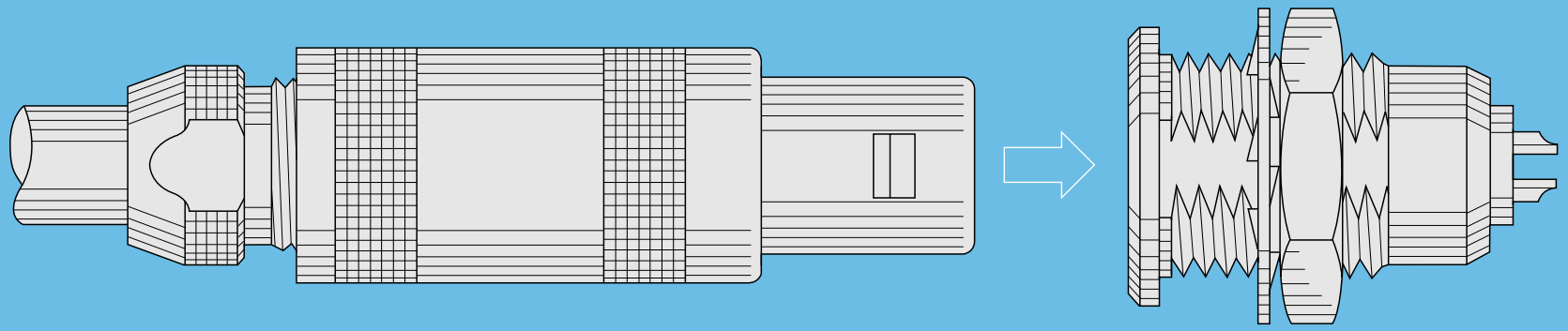

S SERIES

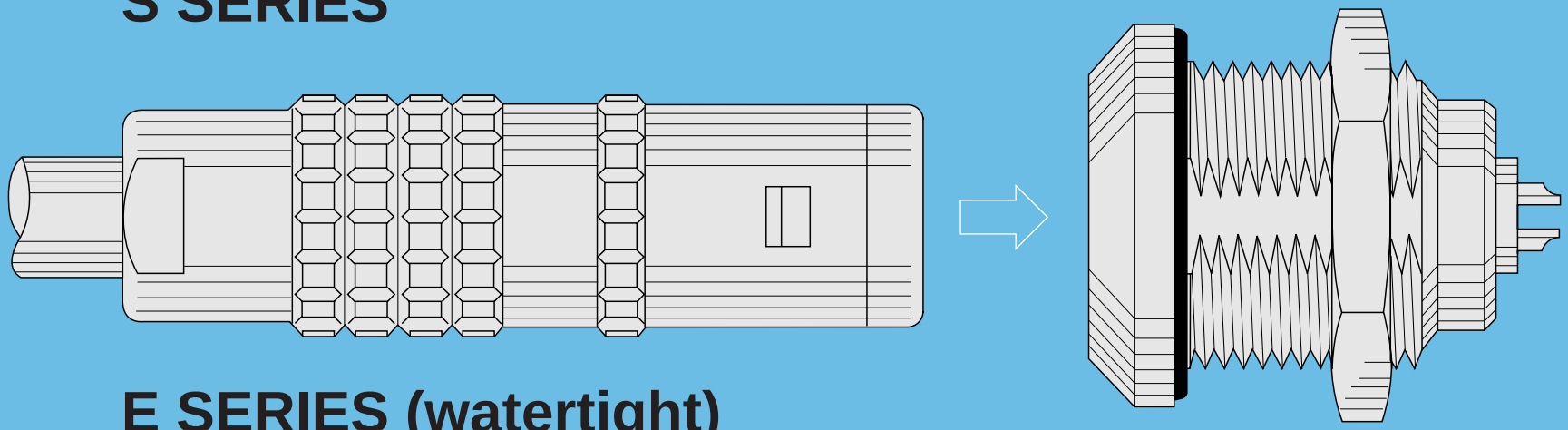

E SERIES (watertight)

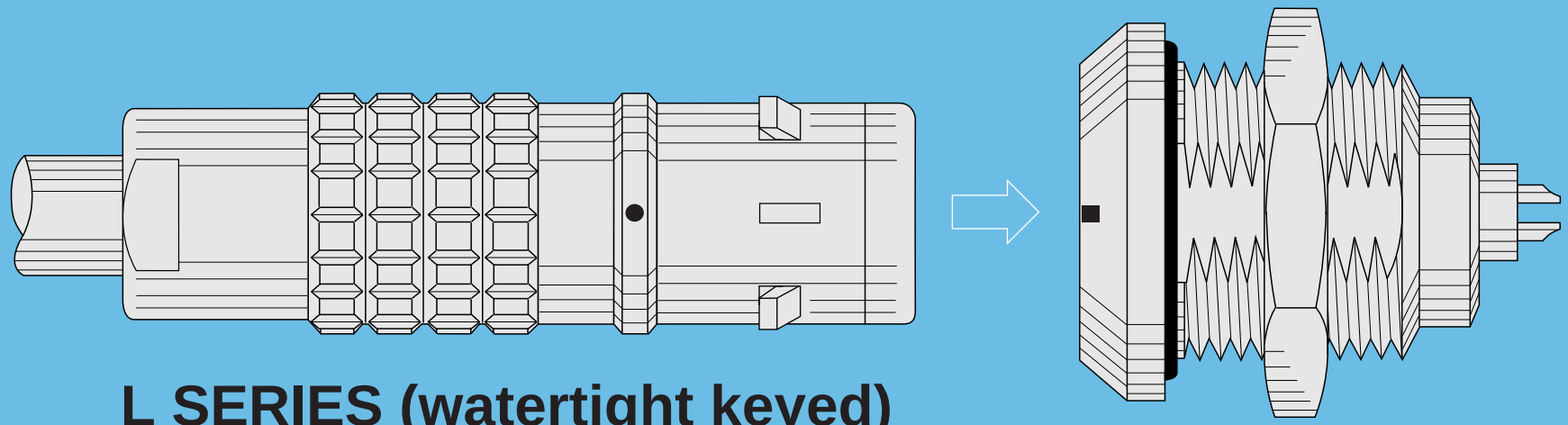

L SERIES (watertight keyed)

S Series

S series connectors have main features as follows:
– security of the Push-Pull self-latching system
– unipole types transmitting current up to 230 A and multipole types with up to 106 contacts
– 360° screening for full EMC shielding.
– solder or print contacts (straight or elbow)
– polarisation by stepped insert (half-moon) fitted with male and female contacts

Metal housing models (page 58)

Fixed plug

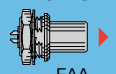
FAA

Elbow plugs

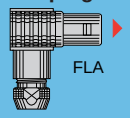
FLA

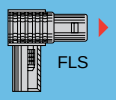
FLS

Straight plugs

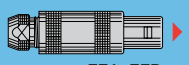
FFA, FFP

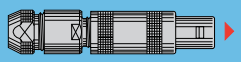
FFA

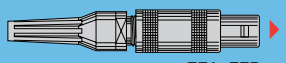
FFA, FFP

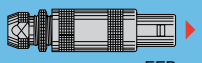
FFB

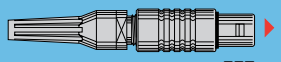
FFE

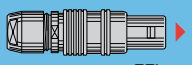
FFL

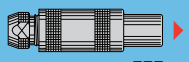
FFF

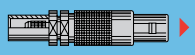
FFS

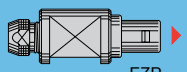
FZP

Fixed sockets

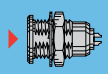
ERA

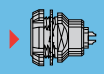
EEP

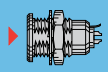
ERN

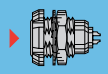
ERD

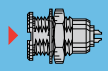
ERC

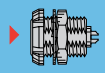
ECP

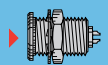
ERS

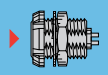
ECP

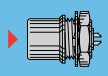
EHP

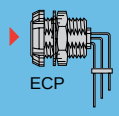
ECP

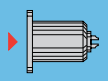
EBD

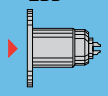
EBS

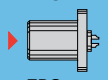
EBC

Free coupler

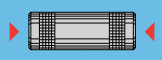
RMA

Fixed coupler

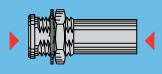
RAD

Free sockets

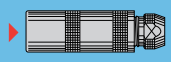
PCA, PCP

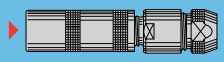
PCA

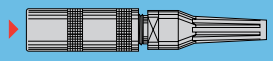
PCA, PCP

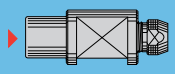
PZP

Fixed sockets

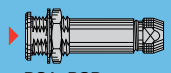
PSA, PSP

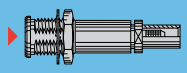
PSS

T-plug

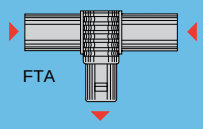
FTA

Elbow socket models (page 68)

Elbow sockets

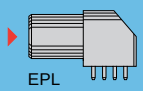
EPL

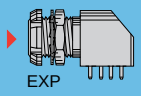
EXP

Plastic housing models (page 70)

Straight plugs

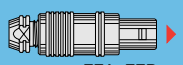
FFA, FFP

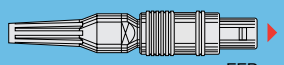
FFP

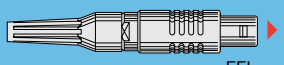
FFL

Fixed socket

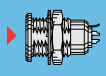
ERN

Watertight or vacuumtight models (page 72)

Fixed sockets

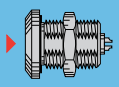
HGP

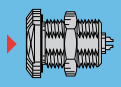
EWB

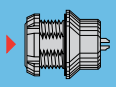
HCP

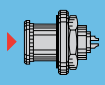
HGW

Fixed coupler

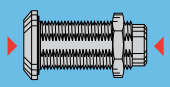
SWH

Part Numbering System

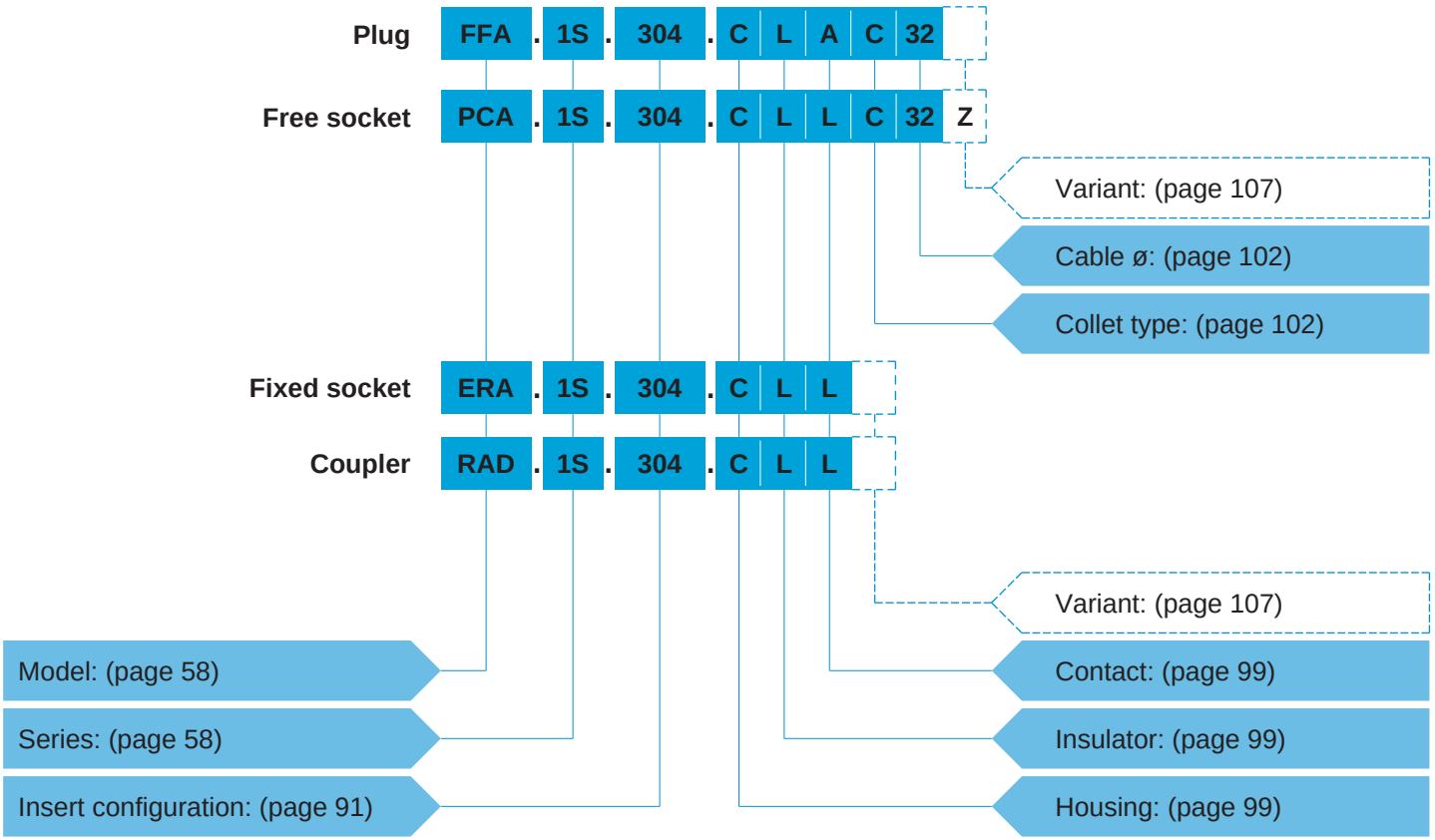

Part Number Example

Straight plug with cable collet:
FFA.1S.304.CLAC32 = straight plug with cable collet, 1S series, multipole type with 4 contacts, outer shell in chrome-plated brass, PEEK insulator, 2 male and 2 female solder contacts, C type collet for a 3.2 mm diameter cable.

Free socket:
PCA.1S.304.CLLC32Z = free socket, with cable collet, 1S series, multipole type with 4 contacts, outer shell in chrome-plated brass, PEEK insulator, 2 female and 2 male solder contacts, C type collet for a 3.2 mm diameter cable and nut for fitting a bend relief.

Fixed socket:
ERA.1S.304.CLL = fixed socket, nut fixing, 1S series, multipole type with 4 contacts, outer shell in chrome-plated brass, PEEK insulator, 2 female and 2 male solder contacts.

Fixed coupler:
RAD.1S.304.CLL = straight coupler, nut fixing, 1S series, multipole type with 4 contacts, outer shell in chrome-plated brass, PEEK insulator, 2 female and 2 male contacts each end.

Part Section Showing Internal Components

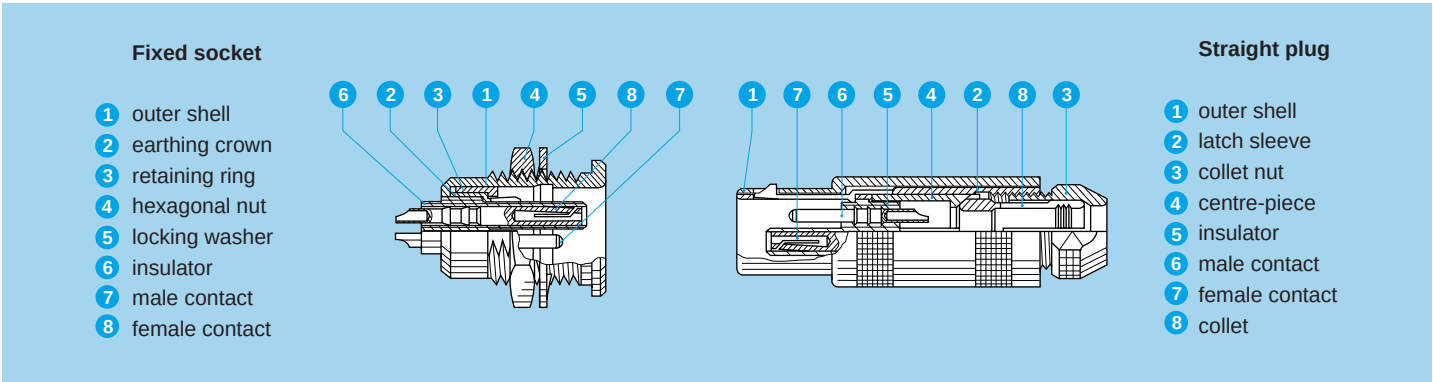

Metal housing models

Technical Characteristics

Mechanical and Climatical

Characteristics	Value	Standard
Endurance	> 5000 cycles	IEC 60512-5 test 9a
Humidity	up to 95% at 60° C	
Temperature range	- 55° C, +250° C	
Resistance to vibrations	10-2000 Hz, 15 g	IEC 60512-4 test 6d
Shock resistance	100 g, 6 ms	IEC 60512-4 test 6c
Salt spray corrosion test	> 144h	IEC 60512-6 test 11f
Protection index (mated)	IP 50	IEC 60529
Climatical category	55/175/21	IEC 60068-1

Electrical

Characteristics		Value	Standard
Shielding efficiency	at 10 MHz	> 75 dB	IEC 60169-1-3
	at 1 GHz	> 40 dB	IEC 60169-1-3

Note:
The various tests have been carried out with FFA and ERA connector pairs, with chrome-plated brass shell and PEEK insulator.
Detailed electrical characteristics, as well as materials and treatment are presented in the chapter Technical Characteristics on page 171.

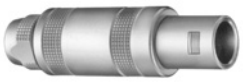

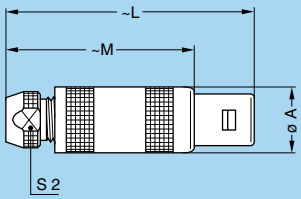

FFA Straight plug, cable collet

Reference		Dimensions (mm)			
Model	Series	A	L	M	S2
FFA	00	6.4	26.0	18.0	4.5
FFA	0S	9.0	34.5	24.5	6.5
FFA	1S	12.0	42.5	31.5	8.5
FFA	2S	14.8	52.0	40.0	11.0
FFA	3S	17.8	61.0	46.0	14.0
FFA	4S	24.8	77.0	59.0	19.0
FFA	5S	35.0	103.0	78.0	29.0
FFA	6S	46.0	106.0	81.0	38.0

M1 Cable assembly (pages 163 to 165)

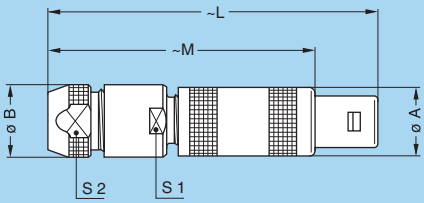

FFA Straight plug with oversize cable collet [1)]

Reference		Dimensions (mm)					
Model	Series	A	B	L	M	S1	S2
FFA	00	6.4	8.0	34.0	26.0	7.0	6.5
FFA	0S	9.0	10.0	45.5	35.5	9.0	8.5
FFA	1S	12.0	13.0	57.0	46.0	12.0	11.0
FFA	2S	14.8	18.0	67.0	55.0	14.0	14.0
FFA	3S	17.8	21.0	85.0	70.0	19.0	19.0
FFA	4S	24.8	31.8	107.0	89.0	28.5	29.0
FFA	5S	35.0	41.8	138.0	113.0	37.5	38.0

M2 Cable assembly (pages 164 and 166)

Note: [1)] correspond to K type of collet, the fitting of oversize collets onto this model allows them to be fitted to the cables that can be accommodated by the next housing size up (see page 102).

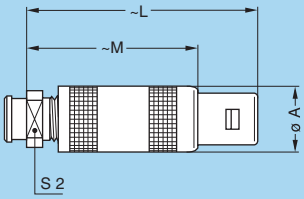

FFA Straight plug, cable collet and nut for fitting a bend relief [1)]

Reference		Dimensions (mm)			
Model	Series	A	L	M	S2
FFA	00	6.4	26.0	18.0	6
FFA	0S	9.0	34.5	24.5	7
FFA	1S	12.0	42.5	31.5	9
FFA	2S	14.8	52.0	40.0	12
FFA	3S	17.8	61.0	46.0	14
FFA	4S	24.8	77.0	59.0	20

M1 Cable assembly (pages 163 and 164)

Note:
[1)] to order, add a «Z» at the end of the reference. The bend relief must be ordered separately (see page 141).

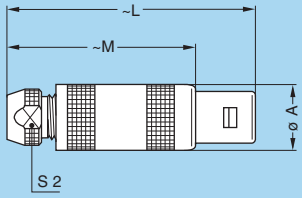

FFP Straight plug, cable collet and inner anti-rotating device

Reference		Dimensions (mm)			
Model	Series	A	L	M	S2
FFP	1S	12.0	42.5	31.5	8.5
FFP	2S	14.8	52.0	40.0	11.0
FFP	3S	17.8	61.0	46.0	14.0
FFP	4S	24.8	77.0	59.0	19.0

M1 Cable assembly (pages 163 and 164)

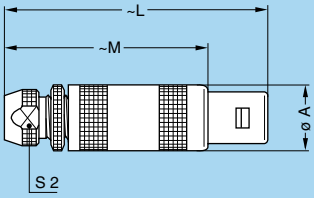

FFB Straight plug, cable collet and safety locking ring

Reference		Dimensions (mm)			
Model	Series	A	L	M	S2
FFB	0S	9.0	36.8	26.8	6.5
FFB	1S	12.0	45.0	34.0	8.5
FFB	2S	14.8	55.5	43.5	11.0
FFB	3S	17.8	65.0	50.0	14.0

M1 Cable assembly (pages 163 and 164)

Note: nut for fitting a bend relief (available only for size 1S).

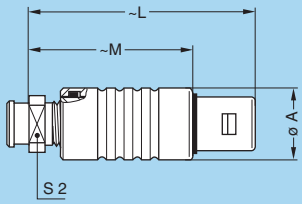

FFE Straight plug, cable collet, front seal and nut for fitting a bend relief [1] (protected to IP54 when mated)

Reference		Dimensions (mm)			
Model	Series	A	L	M	S2
FFE	00	7.4	26.0	18.0	6
FFE	0S	10.0	34.5	24.5	7
FFE	1S	13.0	42.5	31.5	9
FFE	2S	16.0	52.0	40.0	12
FFE	3S	19.0	61.0	46.0	14

M1 Cable assembly (pages 163 and 164)

Note: [1] to order, add a «Z» at the end of the reference.
The bend relief must be ordered separately (see page 141).

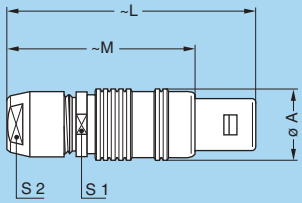

FFL Straight plug, flats on latch sleeve, cable collet and inner anti-rotating device

Reference		Dimensions (mm)				
Model	Series	A	L	M	S1	S2
FFL	2S	15.0	49.0	37.0	13	12

M4 Cable assembly (page 165)

Note: this model is fitted with a «D or M» type collet system.
It is also adapted for crimp contacts.
Available only for multipole.

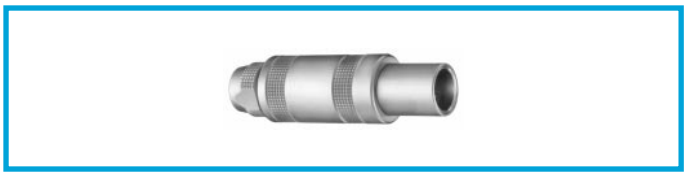

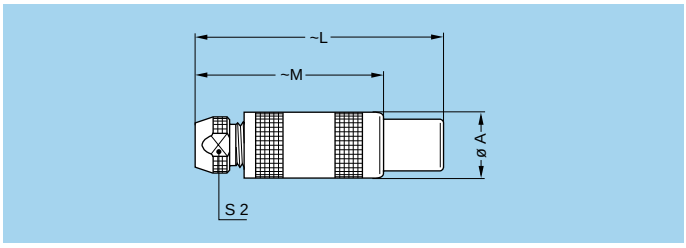

FFF Straight plug, non-latching, cable collet

Reference		Dimensions (mm)			
Model	Series	A	L	M	S2
FFF	00	6.4	26.0	18.0	4.5
FFF	0S	9.0	34.5	24.5	6.5
FFF	1S	12.0	42.5	31.5	8.5
FFF	2S	14.8	52.0	40.0	11.0

M1 Cable assembly (pages 163 and 164)

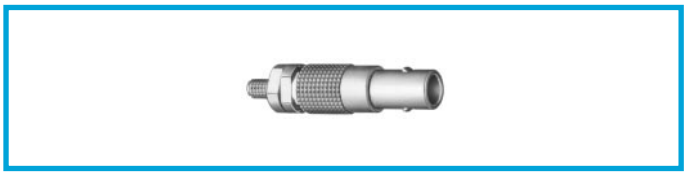

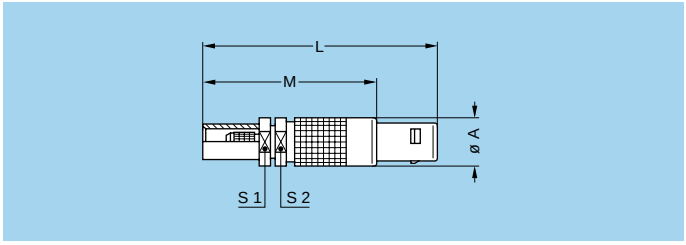

FFS Straight plug for cable crimping

Reference		Dimensions (mm)				
Model	Series	A	L	M	S1	S2
FFS	00	6.4	31	23	5.5	5.5

M5 Cable assembly (page 163)

Note: Model available only with crimp backnut E31 similar to 00.250 series.

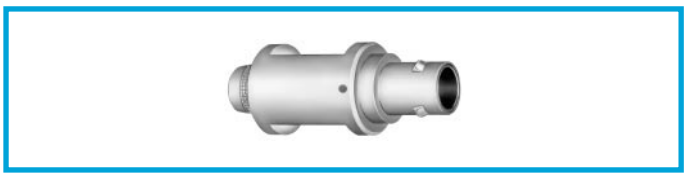

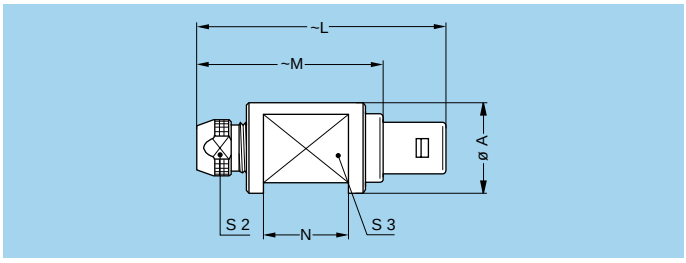

FZP Straight plug for remote handling, cable collet and inner anti-rotating device

Reference		Dimensions (mm)					
Model	Series	A	L	M	N	S2	S3
FZP	1S	16	42.5	31.5	15	8.5	12
FZP	2S	24	52.0	40.0	21	11.0	18
FZP	3S	24	61.0	46.0	24	14.0	18
FZP	4S	35	77.0	59.0	30	19.0	28
FZP	5S	43	103.0	78.0	44	29.0	35
FZP	6S	60	106.0	81.0	44	38.0	50

M1 Cable assembly (pages 163 to 165)

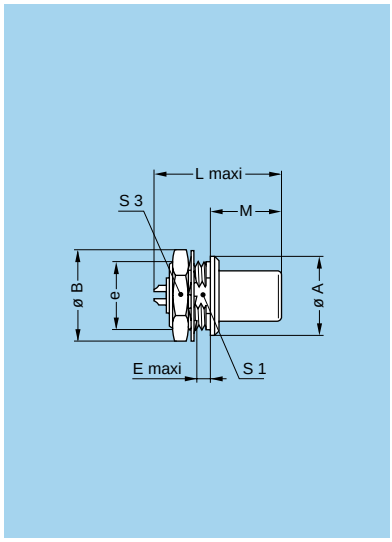

FAA Fixed plug non-latching, nut fixing

Reference		Dimensions (mm)								
Model	Series	A	B	e	E	L	L[1)]	M	S1	S3
FAA	00	8	10.2	M7x0.5	2.0	–	15.5	9.0	6.3	9
FAA	0S	10	12.4	M9x0.6	2.0	18.5	18.0	11.2	8.2	11
FAA	1S	14	15.8	M12x1.0	2.5	22.5	21.7	12.5	10.5	14
FAA	2S	18	19.2	M15x1.0	4.0	25.0	25.3	13.8	13.5	17
FAA	3S	22	25.0	M18x1.0	4.0	31.0	29.0	17.0	16.5	22
FAA	4S	28	34.0	M25x1.0	2.5	35.5	39.0	20.5	23.5	30
FAA	5S	40	40.0	M35x1.0	2.5	45.0	–	28.0	33.5	–
FAA	6S	54	54.0	M48x1.5	2.5	45.0	–	28.0	–	–

P1 Panel cut-out (page 152)

P2 Panel cut-out 6S series (page 152)

Note: [1)] unipole model

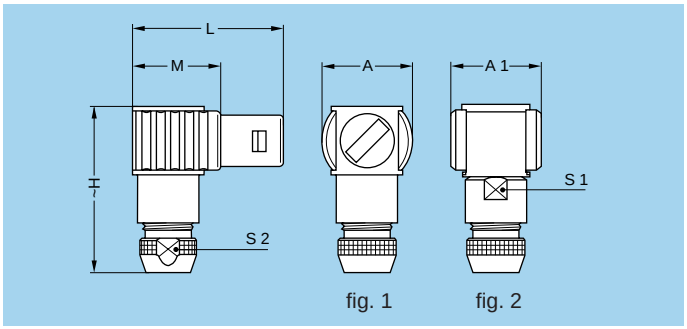

FLA Elbow (90°) plug, cable collet

Reference		Dimensions (mm)						
Model	Series	A	A1	H	L	M	S1	S2
FLA	00	9	–	16.0	17.5	9.5	–	4.5
FLA	0S	13	13	24.5	23.0	13.0	8	6.5
FLA	1S	16	16	28.5	26.5	15.5	10	8.5
FLA	2S	20	20	37.0	31.0	19.0	13	11.0
FLA	3S	21	21	44.0	38.5	23.5	15	14.0
FLA	4S	28	28	56.0	49.0	31.0	20	19.0
FLA	5S	–	37	76.5	65.0	40.0	30	29.0
FLA	6S	–	48	94.0	81.0	56.0	40	38.0

M3 Cable assembly (pages 163 to 165)

Note:
fig. 1 is used for the unipole type, fig. 2 is used for the multipole type.

- Maximum operating temperature: 120°C

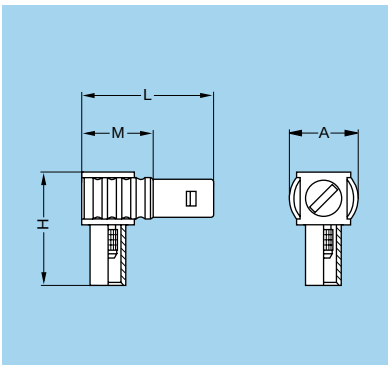

FLS Elbow (90°) plug for cable crimping

Reference		Dimensions (mm)			
Model	Series	A	H	L	M
FLS	00	9	16	17.5	9.5

M6 Cable assembly (page 163)

Note: Model available only with crimp backnut E31 similar to 00.250 series.

- Maximum operating temperature: 120°C

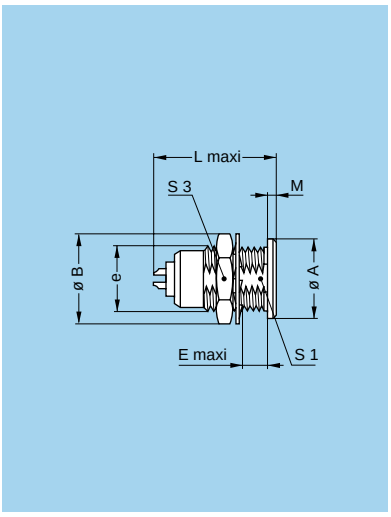

ERA Fixed socket, nut fixing

Reference		Dimensions (mm)								
Model	Series	A	B	e	E	L	L[1)]	M	S1	S3
ERA	00	8	10.2	M7x0.5	5.5	–	14.5	1.0	6.3	9
ERA	0S	10	12.4	M9x0.6	7.0	17.5	18.0	1.2	8.2	11
ERA	1S	14	15.8	M12x1.0	7.5	20.2	20.5	1.5	10.5	14
ERA	2S	18	19.2	M15x1.0	8.5	24.5	23.5	1.8	13.5	17
ERA	3S	22	25.0	M18x1.0	11.5	29.0	27.5	2.0	16.5	22
ERA	4S	28	34.0	M25x1.0	12.0	34.0	33.5	2.5	23.5	30
ERA	5S	40	40.0	M35x1.0	15.5	45.0	78.5	3.0	33.5	–
ERA	6S	54	54.0	M48x1.5	16.0	45.0	–	3.5	45.5	–

P1 Panel cut-out (page 152) **Note:** [1)] unipole model

Note: the 5S series is delivered with a tapered washer and a round nut.
The 6S series is delivered without a locking washer and with a round nut.

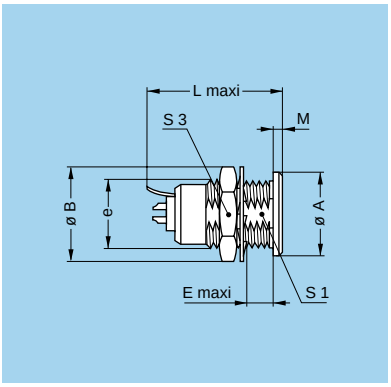

ERN Fixed socket, nut fixing, with earthing tag

Reference		Dimensions (mm)								
Model	Series	A	B	e	E	L	L[1)]	M	S1	S3
ERN	0S	10	12.4	M9x0.6	7.0	19.3	19.3	1.2	8.2	11
ERN	1S	14	15.8	M12x1.0	7.5	22.4	22.4	1.5	10.5	14
ERN	2S	18	19.2	M15x1.0	8.5	26.3	26.3	1.8	13.5	17
ERN	3S	22	25.0	M18x1.0	11.5	29.8	29.8	2.0	16.5	22

P1 Panel cut-out (page 152)

Note: [1)] unipole model

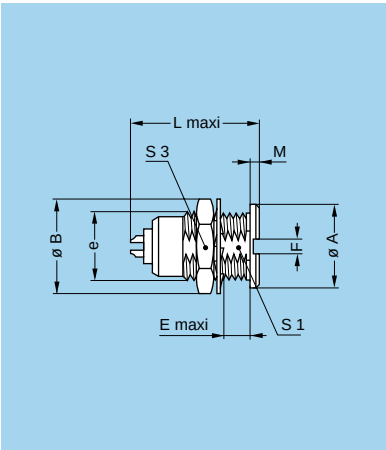

ERC Fixed socket, nut fixing with slot in the flange

Reference		Dimensions (mm)									
Model	Series	A	B	e	E	F	L	L[1)]	M	S1	S3
ERC	00	8	10.2	M7x0.5	5.5	1.6	–	14.5	1.0	6.3	9
ERC	0S	10	12.4	M9x0.6	7.0	2.0	17.5	18.0	1.2	8.2	11
ERC	1S	14	15.8	M12x1.0	7.5	2.5	20.2	20.5	1.5	10.5	14

P1 Panel cut-out (page 152)

Note: 1) unipole model

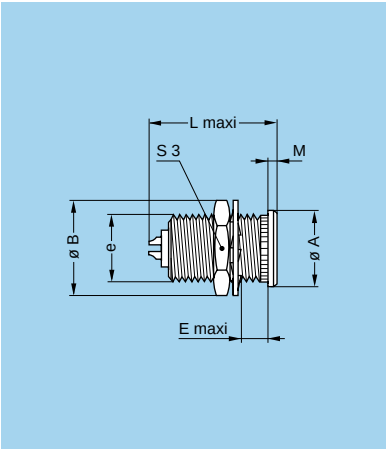

ERS Fixed socket, nut fixing, long threaded shell, without flats

Reference		Dimensions (mm)							
Model	Series	A	B	e	E	L	L[1)]	M	S3
ERS	0S	10	12.4	M9x0.6	10.5	17.5	18.0	1.2	11

P2 Panel cut-out (page 152)

Note: 1) unipole model

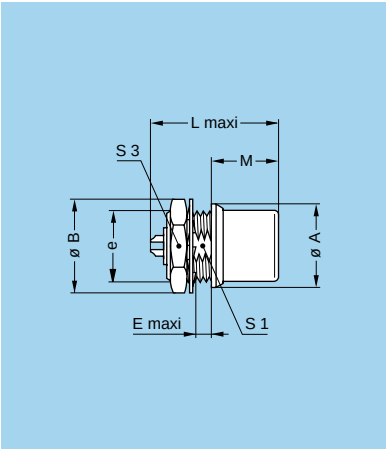

EHP Fixed socket, nut fixing, protruding shell

Reference		Dimensions (mm)								
Model	Series	A	B	e	E	L	L[1)]	M	S1	S3
EHP	0S	10	12.4	M9x0.6	2.0	20.5	18.0	12.5	8.2	11
EHP	1S	14	15.8	M12x1.0	3.5	20.2	20.5	12.0	–	14
EHP	3S	22	25.0	M18x1.0	4.0	29.0	29.0	18.7	–	22

P1 Panel cut-out 0S series (page 152)

P2 Panel cut-out (page 152)

Note: 1) unipole model

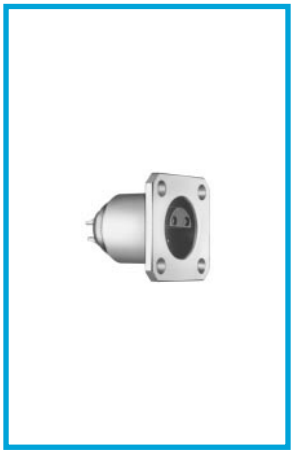

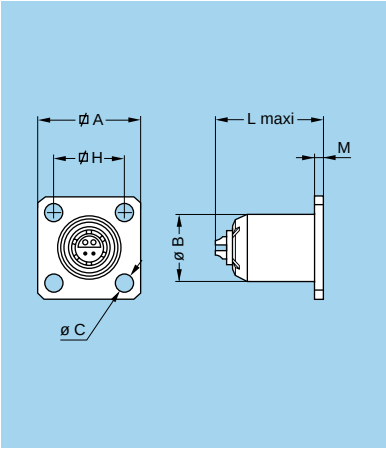

EBD Fixed socket with square flange and screw fixing

Reference		Dimensions (mm)						
Model	Series	A	B	C	H	L	L[1)]	M
EBD	2S	22	15	3.2	15.5	24.5	26	2

P6 Panel cut-out (page 152)

Note: 1) unipole model

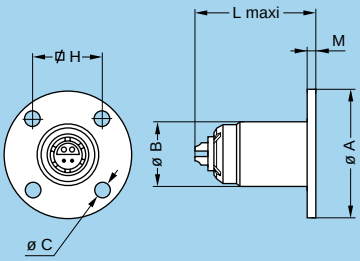

EBS Fixed socket with round flange and screw fixing

Reference		Dimensions (mm)						
Model	Series	A	B	C	H	L	L[1)]	M
EBS	1S	22	11	2.5	12.4	20.2	20.5	1.5

P7 Panel cut-out (page 152)

Note: [1)] unipole model

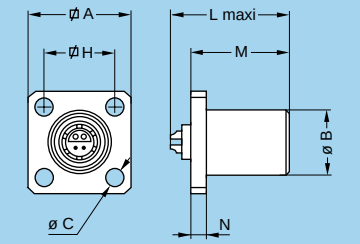

EBC Fixed socket with square flange, protruding shell and screw fixing

Reference		Dimensions (mm)							
Model	Series	A	B	C	H	L	L[1)]	M	N
EBC	1S	18	11.5	3.2	12.7	20.2	20.5	16.5	2.8
EBC	2S	22	15.0	3.2	15.5	24.5	23.5	18.5	4.4
EBC	3S	25	18.0	3.2	18.0	29.0	27.5	23.5	3.0
EBC	5S	45	40.0	4.3	36.8	45.0	78.5	15.0	4.0

P6 Panel cut-out (page 152)

Note: [1)] unipole model

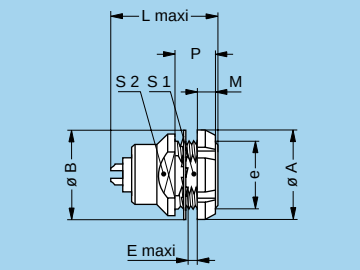

EEP Fixed socket, nut fixing (back panel mounting)

Reference		Dimensions (mm)									
Model	Series	A	B	e	E	L	L[1)]	M	P	S1	S2
EEP	2S	20	19.5	M15x1	3.5	24.5	23.5	3.5	9	13.5	15

P1 Panel cut-out (page 152)

Note: [1)] unipole model

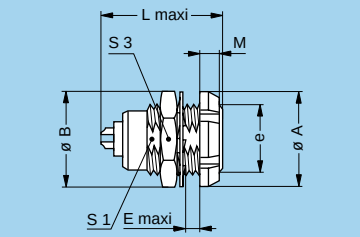

ERD Fixed socket with two nuts (back panel mounting)

Reference		Dimensions (mm)								
Model	Series	A	B	e	E	L	L[1)]	M	S1	S3
ERD	0S	12	12.4	M9x0.6	5.5	17.5	18.0	2.5	8.2	11
ERD	1S	16	15.8	M12x1.0	6.0	20.2	20.5	3.5	10.5	14
ERD	2S	20	19.2	M15x1.0	6.5	24.5	23.5	3.5	13.5	17
ERD	3S	24	25.0	M18x1.0	9.0	29.0	27.5	4.5	16.5	22
ERD	4S	30	34.0	M25x1.0	10.0	34.0	33.5	4.5	23.5	30

P1 Panel cut-out (page 152)

Note: [1)] unipole model.
The 3S and 4S series are delivered with a conical nut.

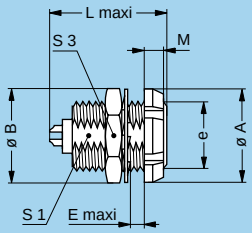

ECP Fixed socket with two nuts, long threaded shell
(back panel mounting)

Reference		Dimensions (mm)								
Model	Series	A	B	e	E	L	L[1)]	M	S1	S3
ECP	0S	12	12.4	M9x0.6	8.5	17.5	18.5	2.5	8.2	11
ECP	1S	16	15.8	M12x1.0	10.0	20.2	21.5	3.5	10.5	14
ECP	2S	20	19.2	M15x1.0	11.0	24.5	26.0	3.5	13.5	17
ECP	3S	24	25.0	M18x1.0	14.0	29.0	30.0	4.5	16.5	22

P1 Panel cut-out (page 152)

Note: [1)] unipole model.
The 3S series is delivered with a conical nut.

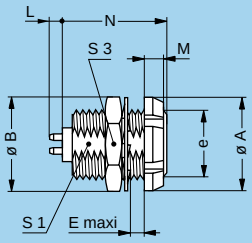

ECP Fixed socket with two nuts, long threaded shell, with straight contact for printed circuit
(back panel mounting)

Reference		Dimensions (mm)							
Model	Series	A	B	e	E	M	N	S1	S3
ECP	0S	12	12.4	M9x0.6	8.5	2.5	15.0	8.2	11
ECP	1S	16	15.8	M12x1.0	10.0	3.5	17.5	10.5	14
ECP	2S	20	19.2	M15x1.0	11.0	3.5	20.0	13.5	17
ECP	3S	24	25.0	M18x1.0	14.0	4.5	24.0	16.5	22

P1 Panel cut-out (page 152)

P21 PCB drilling pattern (page 159)

Note: this contact type is available for all E●● socket models.
See page 159 for table of available types.
Length «L» depends on the number of contacts, see table on page 159.
The 3S series is delivered with a conical nut.

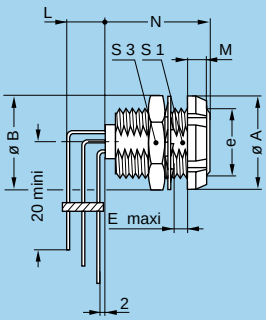

ECP Fixed socket with two nuts, long threaded shell, with elbow (90°) contacts for printed circuit
(back panel mounting)

Reference		Dimensions (mm)							
Model	Series	A	B	e	E	M	N	S1	S3
ECP	0S	12	12.4	M9x0.6	8.5	2.5	15.0	8.2	11
ECP	1S	16	15.8	M12x1.0	10.0	3.5	17.5	10.5	14
ECP	2S	20	19.2	M15x1.0	11.0	3.5	20.0	13.5	17
ECP	3S	24	25.0	M18x1.0	14.0	4.5	24.0	16.5	22

P1 Panel cut-out (page 152)

P24 PCB drilling pattern (page 160)

Note: this contact type is available for all back panel mounting socket types.
See page 160 for available types.
Length «L» depends on the number of contacts, see PCB drilling pattern on page 160.
The 3S series is delivered with a conical nut.

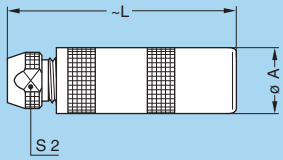

PCA Free socket, cable collet

Reference		Dimensions (mm)		
Model	Series	A	L	S2
PCA	00	6.5	25.0	4.5
PCA	0S	8.9	33.5	6.5
PCA	1S	11.9	40.5	8.5
PCA	2S	14.8	50.0	11.0
PCA	3S	17.8	59.0	14.0
PCA	4S	24.8	75.0	19.0
PCA	5S	34.7	99.0	29.0
PCA	6S	46.0	102.0	38.0

M1 Cable assembly (pages 163 to 165)

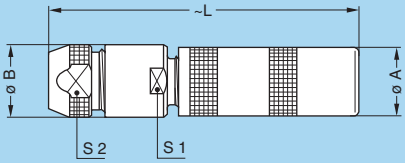

PCA Free socket with oversize cable collet [1)]

Reference		Dimensions (mm)				
Model	Series	A	B	L	S1	S2
PCA	00	6.5	8.0	33.0	7.0	6.5
PCA	0S	8.9	10.0	44.5	9.0	8.5
PCA	1S	11.9	13.0	55.0	12.0	11.0
PCA	2S	14.8	18.0	65.0	14.0	14.0
PCA	3S	17.8	21.0	83.0	19.0	19.0
PCA	4S	24.8	31.8	105.0	28.5	29.0

M2 Cable assembly (pages 164 and 166)

Note: [1)] correspond to K type of collet, the fitting of oversize collets onto this model allows them to be fitted to the cables that can be accommodated by the next housing size up (see page 102).

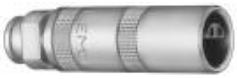

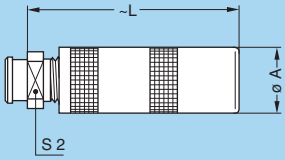

PCA Free socket, cable collet and nut for fitting a bend relief [1)]

Reference		Dimensions (mm)		
Model	Series	A	L	S2
PCA	00	6.5	25.0	6
PCA	0S	8.9	33.5	7
PCA	1S	11.9	40.5	9
PCA	2S	14.8	50.0	12
PCA	3S	17.8	59.0	14
PCA	4S	24.8	75.0	20

M1
Cable assembly (pages 163 and 164)

Note: [1)] to order, add a «Z» at the end of the reference.
The bend relief must be ordered separately (see page 141).

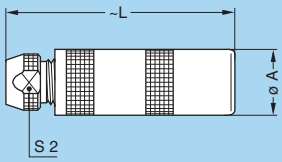

PCP Free socket, cable collet and inner anti-rotating device

Reference		Dimensions (mm)		
Model	Series	A	L	S2
PCP	1S	11.9	40.5	8.5
PCP	2S	14.8	50.0	11.0
PCP	3S	17.8	59.0	14.0
PCP	4S	24.8	75.0	19.0

M1 Cable assembly (pages 163 and 164)

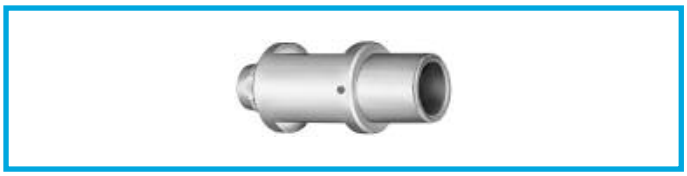

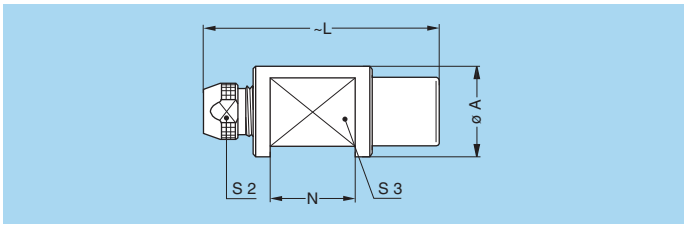

PZP Free socket for remote handling with cable collet and inner anti-rotating device

Reference		Dimensions (mm)				
Model	Series	A	L	N	S2	S3
PZP	1S	16	40.5	15	8.5	12
PZP	2S	24	50.0	21	11.0	18
PZP	3S	24	59.0	24	14.0	18

M1 Cable assembly (pages 163 and 164)

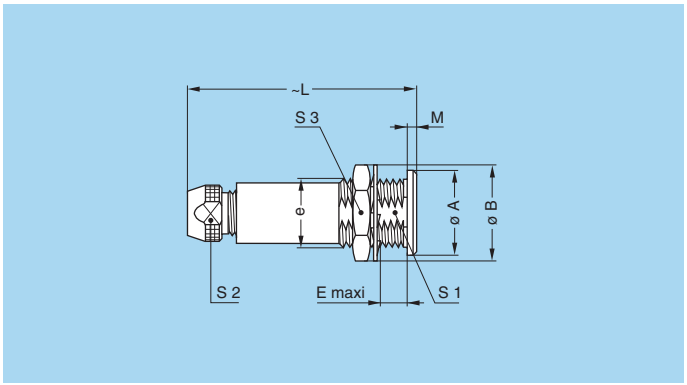

PSA Fixed socket, nut fixing, cable collet

Reference		Dimensions (mm)								
Model	Series	A	B	e	E	L	M	S1	S2	S3
PSA	00	8	10.2	M7x0.5	5.5	25.0	1.0	6.3	4.5	9
PSA	0S	10	12.4	M9x0.6	7.0	33.5	1.2	8.2	6.5	11
PSA	1S	14	15.8	M12x1.0	7.5	40.5	1.5	10.5	8.5	14
PSA	2S	18	19.2	M15x1.0	8.5	50.0	1.8	13.5	11.0	17
PSA	3S	22	25.0	M18x1.0	11.5	59.0	2.0	16.5	14.0	22
PSA	4S	28	34.0	M25x1.0	12.0	75.0	2.5	23.5	19.0	30
PSA	5S	40	40.0	M35x1.0	15.5	99.0	3.0	33.5	29.0	–
PSA	6S	54	54.0	M48x1.5	16.0	102.0	3.5	45.5	38.0	–

M1 Cable assembly (pages 163 to 165)

P1 Panel cut-out (page 152)

Note: the 5S series is delivered with a tapered washer and a round nut. The 6S series is delivered without a locking washer and with a round nut.

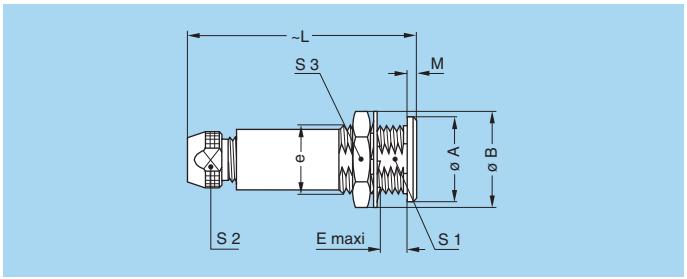

PSP Fixed socket, nut fixing, cable collet and inner anti-rotating device

Reference		Dimensions (mm)								
Model	Series	A	B	e	E	L	M	S1	S2	S3
PSP	1S	14	15.8	M12x1.0	7.5	40.5	1.5	10.5	8.5	14
PSP	2S	18	19.2	M15x1.0	8.5	50.0	1.8	13.5	11.0	17
PSP	3S	22	25.0	M18x1.0	11.5	59.0	2.0	16.5	14.0	22
PSP	4S	28	34.0	M25x1.0	12.0	75.0	2.5	23.5	19.0	30

M1 Cable assembly (pages 163 and 164)

P1 Panel cut-out (page 152)

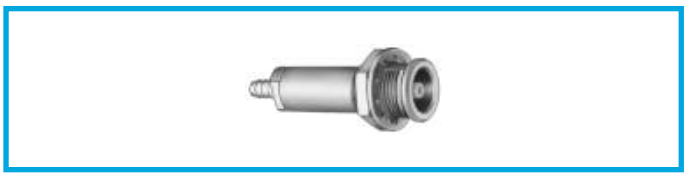

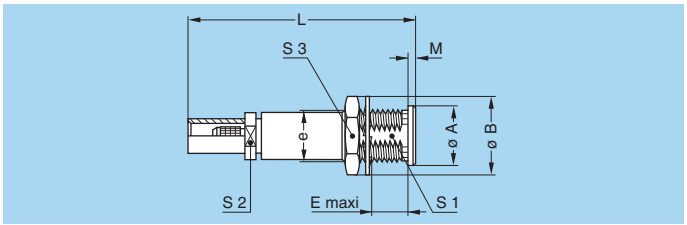

PSS Free socket, nut fixing for cable crimping

Reference		Dimensions (mm)								
Model	Series	A	B	e	E	L	M	S1	S2	S3
PSS	00	8	10.2	M7x0.5	5.5	30	1	6.3	5.5	9

M5 Cable assembly (page 163)

P1 Panel cut-out (page 152)

Note: Model available only with crimp backnut E31 similar to 00.250 series.

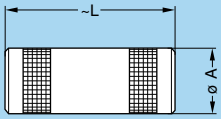

RMA Free coupler

Reference		Dim. (mm)	
Model	Series	A	L
RMA	00	6.4	22.0
RMA	0S	8.9	25.0
RMA	1S	11.9	28.5
RMA	2S	14.8	31.5
RMA	3S	17.8	38.5
RMA	4S	24.8	46.5
RMA	5S	34.7	60.5

Note: see page 101 for the available plug and contact configurations and in order to ensure correct contact alignment.

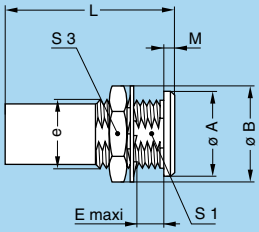

Note: see page 101 for the available plug and contact configurations and in order to ensure correct contact alignment.

RAD Fixed coupler, nut fixing

Reference		Dimensions (mm)							
Model	Series	A	B	e	E	L	M	S1	S2
RAD	00	8	10.2	M7x0.5	5.5	22.0	1.0	6.3	9
RAD	0S	10	12.4	M9x0.6	7.0	25.0	1.2	8.2	11
RAD	1S	14	15.8	M12x1.0	7.5	28.5	1.5	10.5	14
RAD	2S	18	19.2	M15x1.0	8.5	31.5	1.8	13.5	17
RAD	3S	22	25.0	M18x1.0	11.5	38.5	2.0	16.5	22
RAD	4S	28	34.0	M25x1.0	12.0	46.5	2.5	–	30
RAD	5S	40	40.0	M35x1.0	15.5	60.5	3.0	–	–

P1 Panel cut-out (page 152)

P2 Panel cut-out 4S and 5S series (page 152)

Note: the 5S series is delivered with a tapered washer and a round nut.

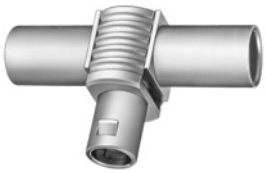

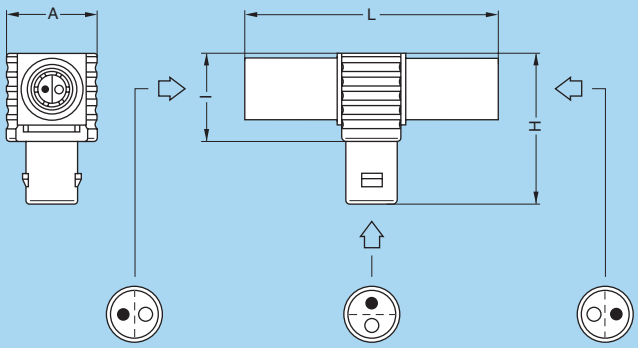

FTA T-plug with two in line sockets

Reference		Dimensions (mm)			
Model	Series	A	H	I	L
FTA	00	9	17.5	9.5	30
FTA	0S	13	23.0	13.0	38
FTA	1S	16	26.5	16.5	45
FTA	3S	21	38.5	23.5	64

Note: multipole version available only with 2 contacts (type 302).

Elbow socket models

Technical Characteristics

Types

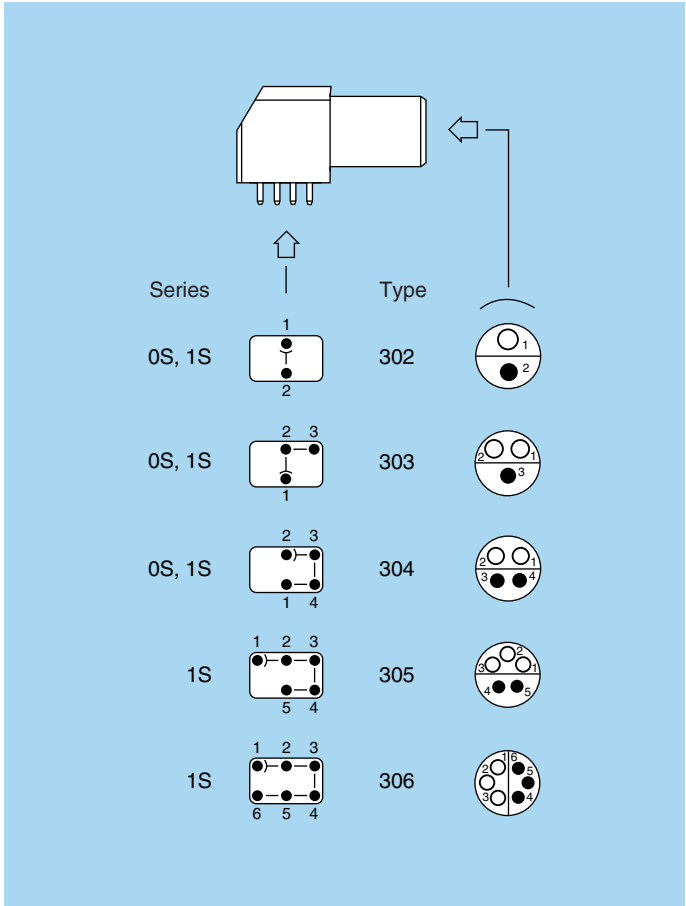

Materials and Treatment

Component	Material	Surface Treat. (µm)		
		Cu	Ni	Au
Housing	PPS 1)	–		
	Brass	0.5	3	–
Metallic parts	Brass	0.5	3	–
Earthing crown	Bronze	0.5	3	–
Insulator	PEEK	–		
Female contact	Bronze	0.5	3	1.5

Note: 1) not used for all sizes.
The surface treatment standards are as follows:
– Nickel FS QQ-N-290A
– Gold: ISO 27874

Electrical

Model	Series	Types	Test voltage (kV rms)1)	Rated current (A)
EPL	0S	302-303-304	1.20	4.5
EXP	0S			
EPL	1S			
EXP	1S			
EPL	1S	305-306	0.70	4.5
EXP	1S			

Note:
1) see calculation method, caution and suggested standard on page 178.

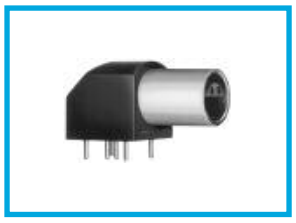

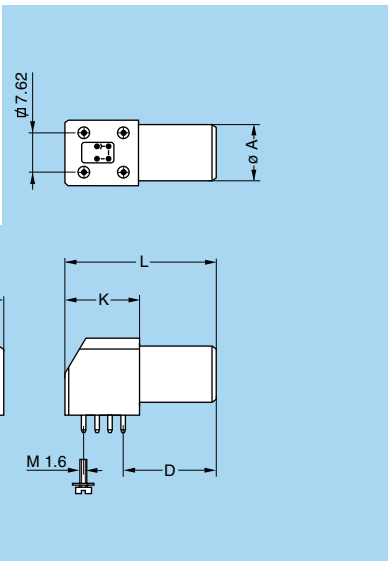

EPL Elbow (90°) socket for printed circuit (solder or screw fixing)

Part Number	Dimensions (mm)						
	A	D	H	I	K	L	N
EPL.0S.302.HLN	9	14.6	6.7	12.6	13.3	25	11.7
EPL.0S.303.HLN							
EPL.0S.304.HLN							
EPL.1S.302.HLN	11	16.6	7.5	14.0	13.3	27	12.6
EPL.1S.303.HLN							
EPL.1S.304.HLN							
EPL.1S.305.HLN							
EPL.1S.306.HLN							

Note: to replace the 4 ground pins by 4 screws (M1.6) add an «S» to the end of the part number. (e.g.: EPL.1S.303.HLNS)

P22 PCB drilling pattern (page 160)

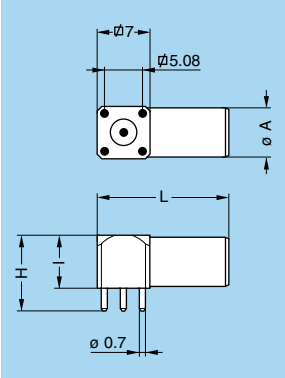

EPL Elbow (90°) socket for printed circuit

Part Number	Dim. (mm)		
	A	H	I
EPL.00.113.NLN	6.8	10	7

P23 PCB drilling pattern (page 160)

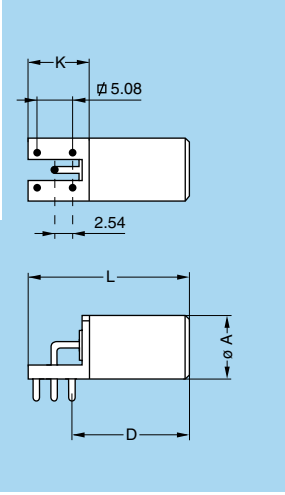

EPL Elbow (90°) socket for printed circuit

Part Number	Dimensions (mm)						
	A	D	H	I	K	L	N
EPL.0S.116.DTL	8.8	16	12	9	7.7	22.7	9

Note: available only in unipole version.

P23 PCB drilling pattern (page 160)

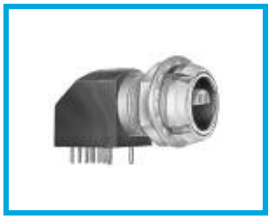

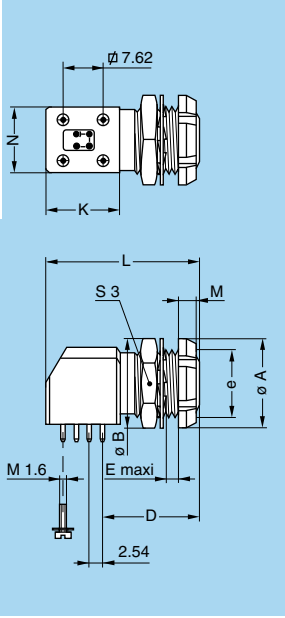

EXP Elbow (90°) socket for printed circuit with two nuts (solder or screw fixing)

Part Number	Dimensions (mm)											
	A	B	D	e	E	H	I	K	L	M	N	S3
EXP.0S.302.HLN	12	12.4	14.6	M9x0.6	6.0	6.7	12.6	13.3	25	2.5	11.7	11
EXP.0S.303.HLN												
EXP.0S.304.HLN												
EXP.1S.302.HLN	14	15.0	16.6	M11x0.5	7.5	7.5	14.0	13.3	27	3.5	12.6	13
EXP.1S.303.HLN												
EXP.1S.304.HLN												
EXP.1S.305.HLN												
EXP.1S.306.HLN												

Note: to replace the 4 ground pins by 4 screws (M1.6) add an «S» to the end of the part number. (e.g.: EXP.1S.303.HLNS).

P2 Panel cut-out 0S series (page 152)

P10 Panel cut-out 1S series (page 152)

P22 PCB drilling pattern (page 160)

Plastic housing models

These connectors are particularly recommended for all applications requiring maximum electrical insulation when mated. The design, including a latch sleeve and a metal earthing crown, guarantees EMC screening efficiency to meet most requirements.

Technical Characteristics

Mechanical and Climatical

Characteristics	Value				Standard
	PEEK	POM	PSU	PPSU	
Colour	natural (beige)	black	white or grey	cream	–
Endurance	> 5000 cycles	> 5000 cycles	> 5000 cycles	> 5000 cycles	IEC 60512-5 test 9a
Humidity	up to 95% at 60° C				–
Temperature range	- 50° C/+250° C	- 50° C/+115° C	- 50° C/+150° C	- 50° C/+180° C	–
Sterilization resistance 1)	> 200 cycles	none	~20 cycles	> 100 cycles	IEC 60601-1 § 44.7
Resistance to organic solvents	very good	very good	limited	good	–

Note:
1) Steam sterilization

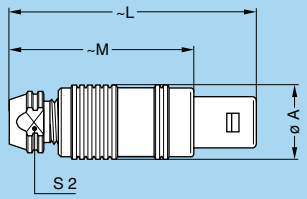

FFA **Straight plug, cable collet, PEEK or POM outer shell**

FFP **Straight plug, cable collet, PEEK or POM outer shell and inner anti-rotating device**

Reference		Dimensions (mm)			
Model	Series	A	L	M	S2
FFA	00	7.0	33.5	25.5	6.0
FFP	1S	12.0	42.5	31.5	10.0
FFP	2S	15.0	52.0	40.0	12.0
FFP	3S	18.0	61.0	46.0	14.0

M1 Cable assembly (pages 163 and 164)

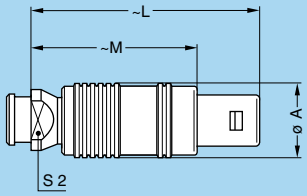

FFP **Straight plug, cable collet, PEEK or POM outer shell, inner anti-rotating device and nut for fitting a bend relief** 1)

Reference		Dimensions (mm)			
Model	Series	A	L	M	S2
FFP	1S	12.0	41.5	30.5	10.0
FFP	2S	15.0	51.0	39.0	12.0
FFP	3S	18.0	61.0	46.0	14.0

M1 Cable assembly (pages 163 and 164)

Note: 1) to order, add a «Z» at the end of the reference.
The bend relief must be ordered separately (see page 141).

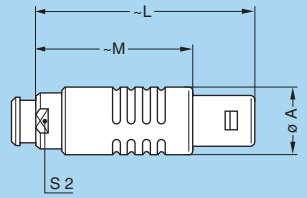

FFL **Straight plug, cable collet, with PSU and PPSU outer shell, inner anti-rotating device and nut for fitting a bend relief** 1)

Reference		Dimensions (mm)			
Model	Series	A	L	M	S2
FFL	2S	16.5	51.5	39.5	13

M4 Cable assembly (page 165)

Note: 1) to order, add a «Z» at the end of the reference.
The bend relief must be ordered separately (see page 141).
This model is fitted with a «D or M» type collet system.
It is also adapted for crimp contacts.
Available only for multipole.

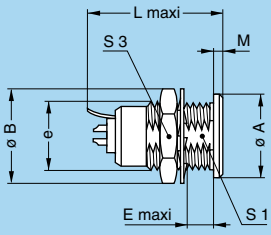

ERN Fixed socket, nut fixing, with earthing tag, PEEK or POM outer shell

Reference		Dimensions (mm)								
Model	Series	A	B	e	E	L	L[1)]	M	S1	S3
ERN	00	9	10.2	M7x0.5	5.5	–	14.5	1.0	6.3	9
ERN	0S	11	12.4	M9x0.6	6.4	19.3	19.3	1.8	8.2	11
ERN	1S	14	15.8	M12x1.0	7.5	22.4	22.4	1.5	10.5	14
ERN	2S	18	19.2	M15x1.0	8.5	26.3	26.3	2.0	13.5	17
ERN	3S	22	25.0	M18x1.0	11.5	29.8	29.8	2.0	16.5	22

P1 Panel cut-out (page 152)

Note: [1)] unipole model

Watertight or vacuumtight models

These socket or coupler models allow the device on which they are fitted to reach a protection index of IP68 as per IEC 60529. They are fully compatible with plugs of the same series and are widely used for portable radios, military, laboratory equipment, aviation, etc.
These models are identified by a letter «P» at the end of the reference.
Most of these models are also available in a vacuumtight version. Such models are identified by an additional letter «V» at the end of the part number (certificate on request).
Epoxy resin is used to seal these models.

Technical Characteristics

Mechanical and Climatical

Characteristics	Value	Standard
Endurance	> 5000 cycles	IEC 60512-5 test 9a
Humidity	up to 95% at 60° C	
Temperature range (0S-1S)	- 20° C/+100° C	
Temperature range (2S-6S)	- 20° C/+80° C	
Salt spray corrosion test	> 144h	IEC 60512-6 test 11f
Climatical category	20/80/21	IEC 60068-1
Leakage rate (He)[1)]	< 10^{-7} mbar.l.s^{-1}	IEC 60512-7 test 14b

Note: [1)] only for vacuumtight models.

Characteristics		Value	Standard
Maximum operating pressure[2)]	0S	60 bars	IEC 60512-7 test 14d
	1S	60 bars	
	2S	40 bars	
	3S	30 bars	
	4S	15 bars	
	5S	5 bars	
	6S	5 bars	

Note: [2)] this value corresponds to the maximum allowed pressure difference for the assembled socket.

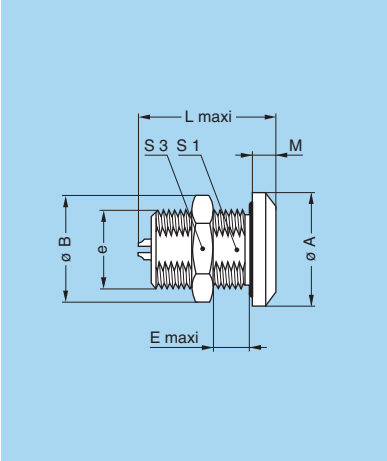

HGP Fixed socket, nut fixing, watertight or vacuumtight

Reference		Dimensions (mm)								
Model	Series	A	B	e	E	L	L[1)]	M	S1	S3
HGP	0S	18	15.8	M12x1.0	11.5	20.5	21.5	4.0	10.5	14
HGP	1S	20	19.2	M14x1.0	15.5	25.0	22.0	4.0	12.5	17
HGP	2S	20	21.5	M16x1.0	17.0	29.5	28.0	4.0	14.5	19
HGP	3S	28	27.0	M20x1.0	18.0	33.0	34.0	6.0	18.5	24
HGP	4S	34	34.0	M25x1.0	22.5	39.0	43.0	6.5	23.5	30
HGP	5S	45	40.0	M35x1.0	28.0	50.5	78.5	7.5	33.5	–
HGP	6S	58	54.0	M48x1.5	22.0	51.0	–	6.0	45.5	–

P3 Panel cut-out (page 152)

Note: [1)] unipole model

Note: the 5S and 6S series are delivered with a round nut.

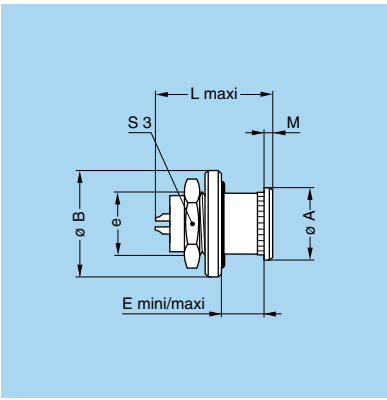

HGW Fixed socket, nut fixing, with back washer, watertight or vacuumtight

Reference		Dimensions (mm)							
Model	Series	A	B	e	E mini	E maxi	L	M	S3
HGW	0S	10	15	M9x0.6	2.0	3.0	20.5	1.2	11
HGW	1S	14	18	M12x1.0	2.0	4.0	25.0	1.5	14

P11 Panel cut-out (page 152)

Note: vacuumtight version is only available in the 0S series.

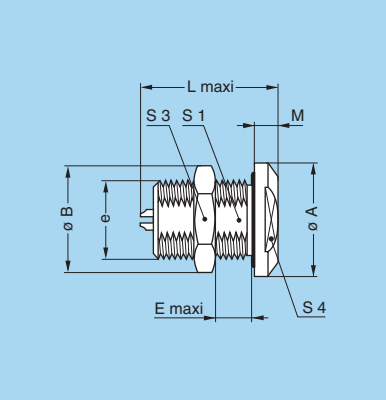

EWB Fixed socket, nut fixing, with two flats on the flange, watertight or vacuumtight

Reference		Dimensions (mm)									
Model	Series	A	B	e	E	L	L[1)]	M	S1	S3	S4
EWB	0S	18	15.8	M12x1.0	11.0	20.5	–	4.0	10.5	14	14
EWB	1S	20	19.2	M14x1.0	15.5	25.5	25.5	4.0	12.5	17	16
EWB	2S	20	21.5	M16x1.0	17.0	28.0	26.5	4.0	14.5	19	16
EWB	4S	34	34.0	M25x1.0	22.5	43.0	–	6.5	23.5	30	27

P3 Panel cut-out (page 152)

Note: [1)] unipole model

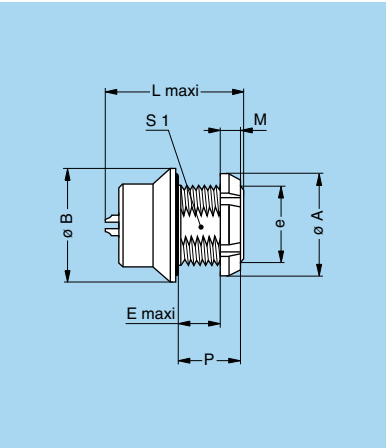

HCP Fixed socket, nut fixing, watertight or vacuumtight (back panel mounting)

Reference		Dimensions (mm)							
Model	Series	A	B	e	E	L	M	P	S1
HCP	1S	18	20	M14x1.0	8.6	25.5	3.5	12.0	–
HCP	2S	20	20	M16x1.0	12.5	29.0	3.5	16.5	14.5
HCP	4S	27	34	M25x1.0	15.5	41.0	4.5	20.0	23.5

P3 Panel cut-out (page 152)

Note: the 2S and 4S series are delivered with a conical nut.

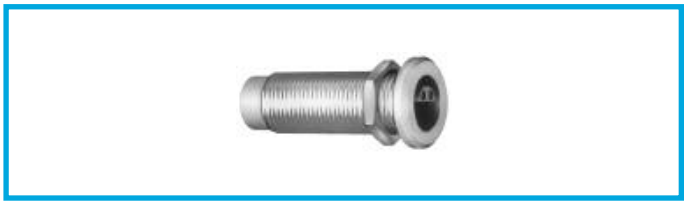

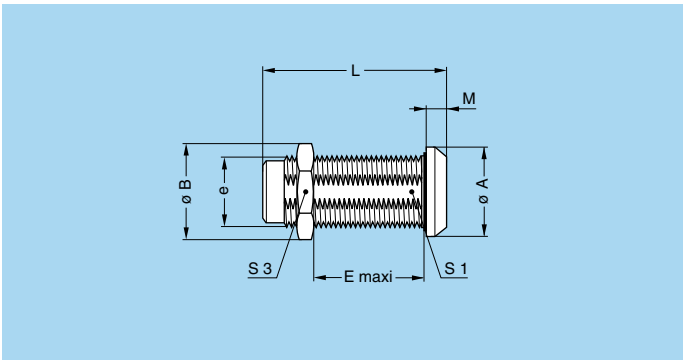

SWH Fixed coupler, nut fixing, watertight or vacuumtight

Reference		Dimensions (mm)							
Model	Series	A	B	e	E	L	M	S1	S3
SWH	0S	14	13.8	M10x0.75	17	34	2.0	9.0	12
SWH	1S	17	15.8	M12x1.00	28	39	2.5	10.5	14
SWH	2S	20	21.5	M16x1.00	25	44	4.0	15.0	19
SWH	3S	25	27.0	M20x1.00	30	53	4.0	18.5	24
SWH	4S	34	34.0	M25x1.00	50	65	4.0	23.5	30
SWH	5S	45	40.0	M35x1.00	58	80	5.0	33.5	–
SWH	6S	58	54.0	M48x1.50	55	81	6.0	45.5	–

P4 Panel cut-out (page 152)

Note: see page 101 for the available plug and contact configurations and in order to ensure correct contact alignment.
The 5S and 6S series are delivered with a round nut.

E Series

E series connectors have been specifically designed for outdoor applications.
They include an inner sleeve and two seals to prevent penetration of solids or liquids into the housing formed by the plug, free socket, fixed socket or coupler. All models of these series are watertight when mated and give a protection index of IP 68 as per IEC 60529 standard (in mated condition) when correctly assembled to an appropriate cable (IP 66 otherwise).

– security of the Push-Pull latching system
– unipole types transmitting current up to 230 A and multipole types with up to 106 contacts
– wide range of models satisfying most applications
– 360° screening for full EMC shielding
– watertight connection (IP 68/IP 66)
– polarization by stepped insert (half-moon) fitted with male and female contacts
– solder or print contacts (straight or elbow)
– rugged housing for extreme working condition.

Metal housing models (page 76)

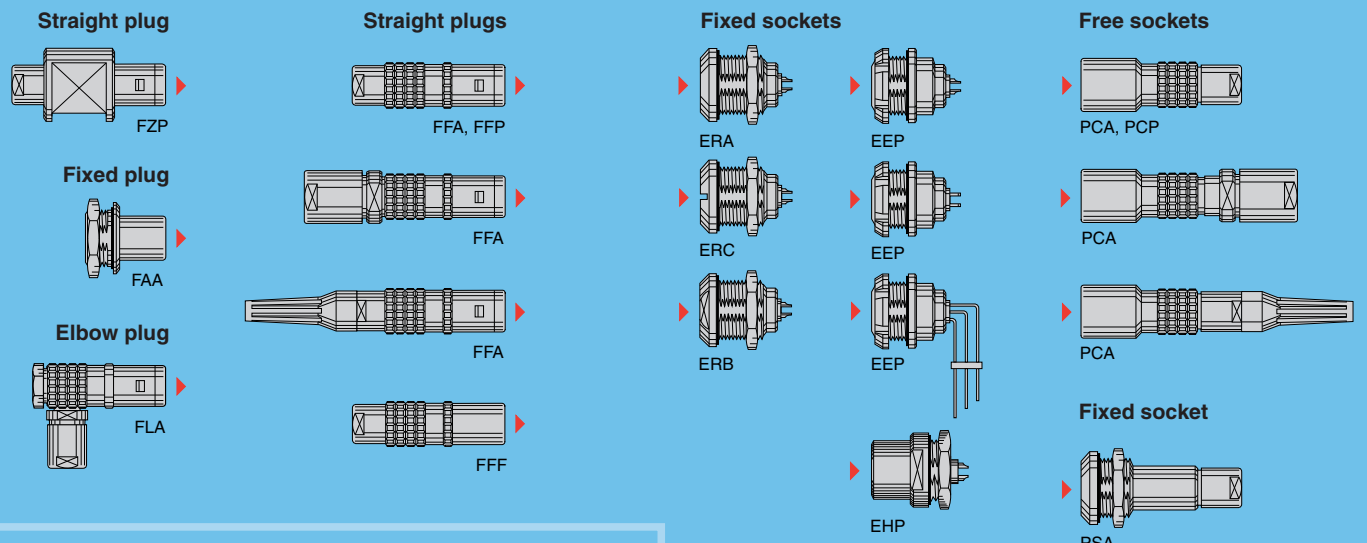

Watertight or vacuumtight models (page 82)

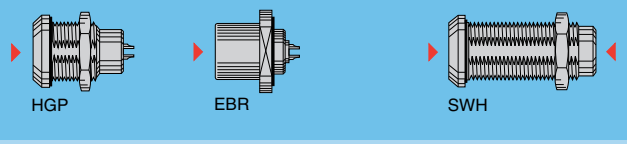

Part Numbering System

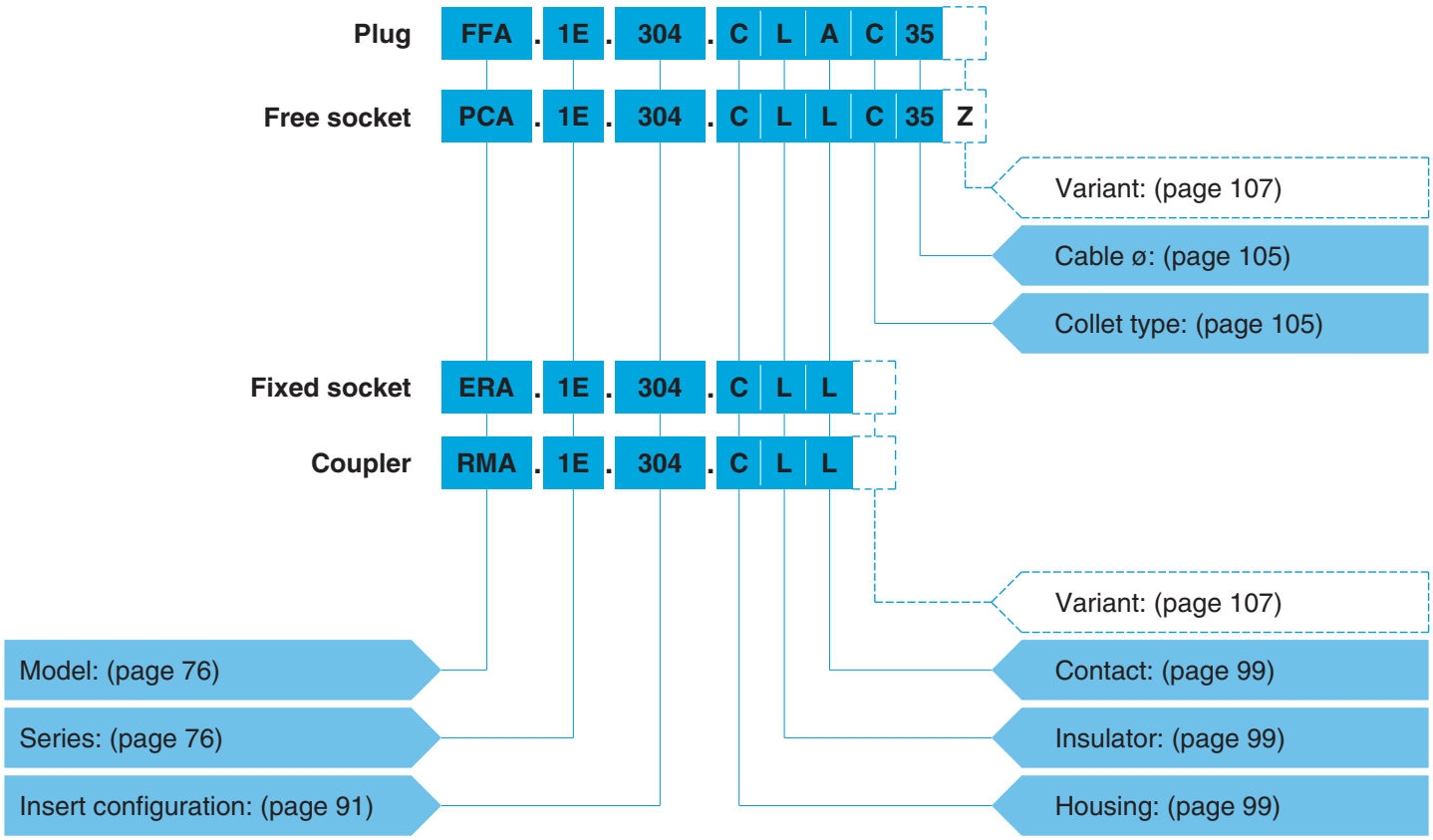

Part Number Example

Straight plug with cable collet:
FFA.1E.304.CLAC35 = straight plug with cable collet, 1E series, multipole type with 4 contacts, outer shell in chrome-plated brass, PEEK insulator, 2 male and 2 female solder contacts, C type collet for a 3.5 mm diameter cable.

Free socket:
PCA.1E.304.CLLC35Z = free socket with cable collet, 1E series, multipole type with 4 contacts, outer shell in chrome-plated brass, PEEK insulator, 2 female and 2 male solder contacts, C type collet for a 3.5 mm diameter cable and collet nut for fitting a bend relief.

Fixed socket:
ERA.1E.304.CLL = fixed socket, nut fixing, 1E series, multipole type with 4 contacts, outer shell in chrome-plated brass, PEEK insulator, 2 female and 2 male solder contacts.

Free coupler:
RMA.1E.304.CLL = straight coupler, 1E series, multipole type with 4 contacts, outer shell in chrome-plated brass, PEEK insulator, 2 female and 2 male contacts each end.

Part Section Showing Internal Components

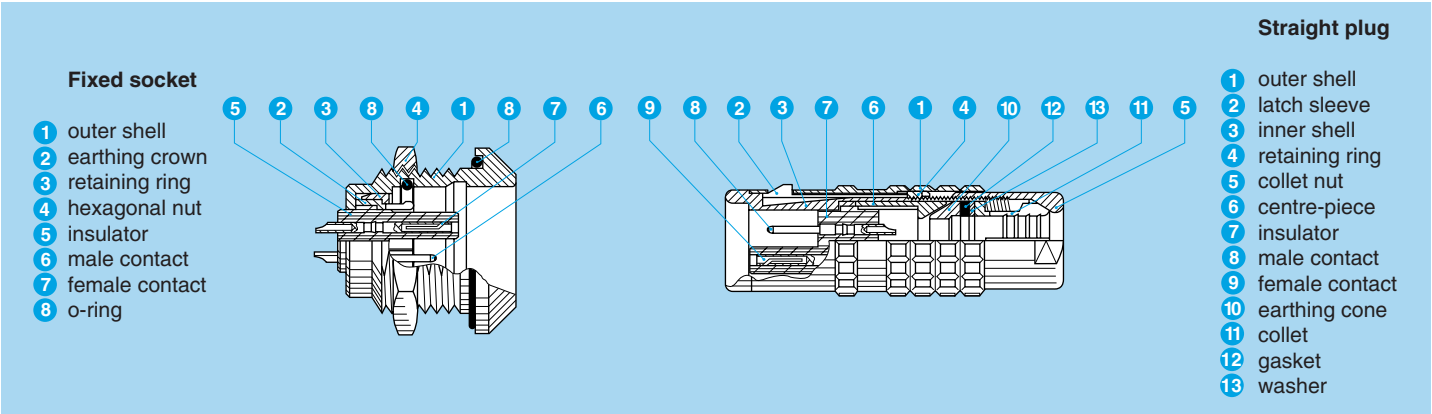

Metal housing models

Technical Characteristics

Mechanical and Climatical

Characteristics	Value	Standard
Endurance	> 5000 cycles	IEC 60512-5 test 9a
Humidity	up to 95% at 60° C	
Temperature range[1)]	- 55° C, +200° C	
Resistance to vibrations	10-2000 Hz, 15 g	IEC 60512-4 test 6d
Shock resistance	100 g, 6 ms	IEC 60512-4 test 6c
Salt spray corrosion test	> 144h	IEC 60512-6 test 11f
Protection index (mated)[2)]	IP 68/IP 66	IEC 60529
Climatical category	50/175/21	IEC 60068-1

Electrical

Characteristics		Value	Standard
Shielding efficiency	at 10 MHz	> 95 dB	IEC 60169-1-3
	at 1 GHz	> 80 dB	IEC 60169-1-3

Note: the various tests have been carried out with FFA and ERA connector pairs, with chrome-plated brass shell, PEEK insulator and silicone O-ring. Detailed electrical characteristics, as well as materials and treatment are presented in the chapter Technical Characteristics on page 171.

1) minimum operating temperature is -20°C for sockets fitted with an FPM (Viton®) O-ring.

2) IP68 achieved providing that the cable is perfectly circular and that assembly process ensures a high integrity seal.

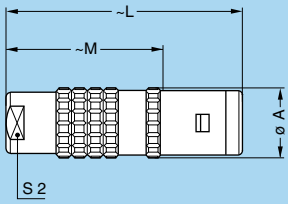

FFA Straight plug, cable collet

Reference		Dimensions (mm)			
Model	Series	A	L	M	S2
FFA	0E	11	34	23.0	8
FFA	1E	13	42	28.0	9
FFA	2E	16	52	36.0	12
FFA	3E	19	61	41.0	15
FFA	4E	25	71	50.5	19
FFA	5E	38	92	67.0	32
FGG[1)]	6E	47	118	89.0	38

M1 Cable assembly (pages 167 and 168)

Note: 1) with key (G)

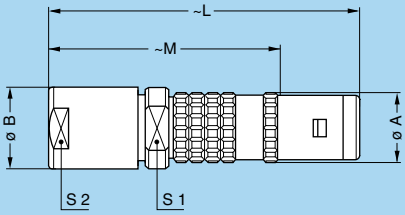

FFA Straight plug with oversize cable collet 1)

Reference		Dimensions (mm)					
Model	Series	A	B	L	M	S1	S2
FFA	1E	13	14.5	55	41	12	12
FFA	2E	16	17.0	65	49	15	15
FFA	3E	19	22.0	80	60	19	19
FFA	4E	25	36.0	118	84	30	32

M2 Cable assembly (pages 167 and 169)

Note: 1) correspond to K type of collet, the fitting of oversize collets onto this model allows them to be fitted to the cables that can be accommodated by the next housing size up (see page 105).

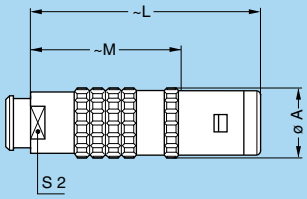

FFA Straight plug, cable collet and nut for fitting a bend relief 1)

Reference		Dimensions (mm)			
Model	Series	A	L	M	S2
FFA	0E	11	34	23.0	7
FFA	1E	13	42	28.0	9
FFA	2E	16	52	36.0	12
FFA	3E	19	60	40.0	15
FFA	4E	25	71	50.5	19

M1 Cable assembly (pages 167 and 168)

Note: 1) to order, add a «Z» at the end of the reference.
The bend relief must be ordered separately (see page 141).

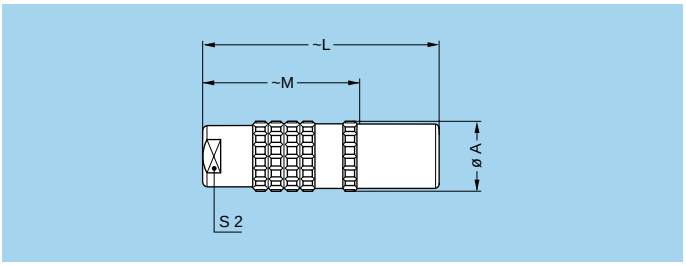

FFF Straight plug non-latching, cable collet

Reference		Dimensions (mm)			
Model	Series	A	L	M	S2
FFF	0E	11	34	23	8
FFF	1E	13	42	28	9

M1 Cable assembly (page 167)

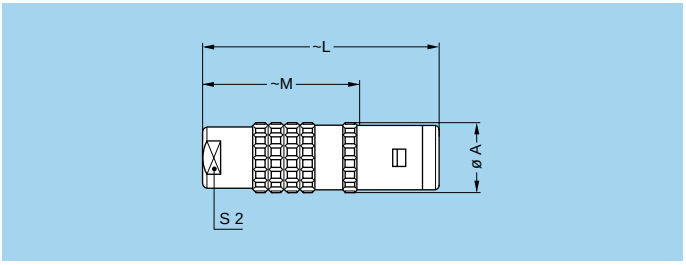

FFP Straight plug, cable collet and inner anti-rotating device

Reference		Dimensions (mm)			
Model	Series	A	L	M	S2
FFP	3E	19	61	41.0	15
FFP	4E	25	71	50.5	19

M1 Cable assembly (pages 167 and 168)

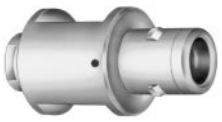

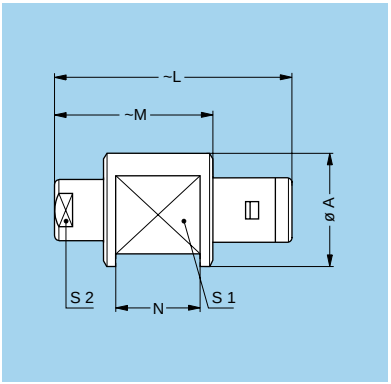

FZP Straight plug for remote handling, cable collet and inner anti-rotating device

Reference		Dimensions (mm)					
Model	Series	A	L	M	N	S1	S2
FZP	1E	20	42	28.0	15	15	9
FZP	2E	22	52	36.0	16	16	12
FZP	3E	23	61	41.0	20	19	15
FZP	4E	32	71	50.5	29	25	19
FZP	5E	44	92	67.0	40	36	32

M1 Cable assembly (pages 167 and 168)

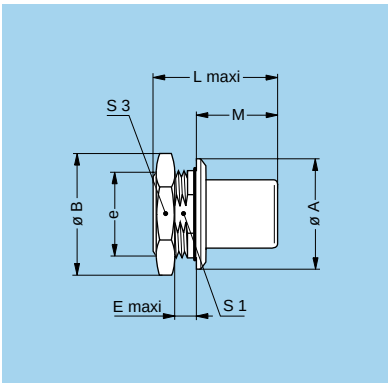

FAA Fixed plug non-latching, nut fixing

Reference		Dimensions (mm)								
Model	Series	A	B	e	E	L	L[1)]	M	S1	S3
FAA	0E	18	19.2	M14x1.0	3.5	19.5	19.5	13.0	12.5	17
FAA	1E	20	21.5	M16x1.0	3.5	23.0	23.0	16.0	14.5	19
FAA	2E	25	27.0	M20x1.0	4.0	27.0	27.0	18.0	18.5	24
FAA	3E	31	34.0	M24x1.0	4.5	32.5	32.5	22.5	22.5	30

P1 Panel cut-out (page 153)

Note: [1)] unipole model

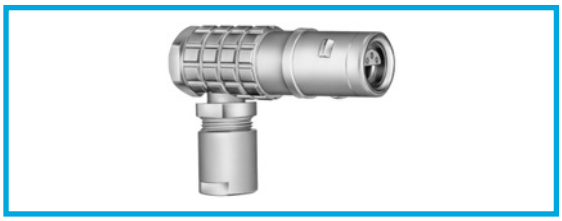

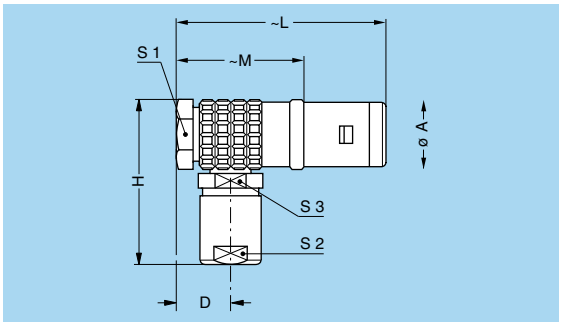

FLA Elbow (90°) plug, cable collet

Reference		Dimensions (mm)							
Model	Series	A	D	H	L	M	S1	S2	S3
FLA	0E	11.5	7.6	27	36	25.0	10	8	8
FLA	1E	14.0	8.8	33	43	29.0	12	9	10
FLA	2E	17.5	10.5	40	51	35.0	15	12	13
FLA	3E	21.0	11.5	47	60	40.0	18	15	15
FLA	4E	27.5	15.5	57	72	51.5	24	19	20

M3 Cable assembly (pages 167 and 168)

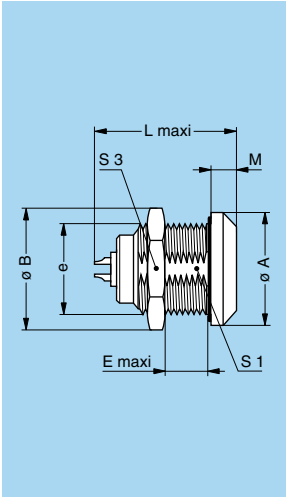

ERA Fixed socket, nut fixing

Reference		Dimensions (mm)								
Model	Series	A	B	e	E	L	L[1]	M	S1	S3
ERA	0E	18	19.2	M14x1.0	5.5	19.5	20.5	4.0	12.5	17
ERA	1E	20	21.5	M16x1.0	9.0	24.0	25.3	4.5	14.5	19
ERA	2E	25	27.0	M20x1.0	9.0	28.5	30.0	5.0	18.5	24
ERA	3E	31	34.0	M24x1.0	11.0	34.0	35.0	6.0	22.5	30
ERA	4E	37	40.5	M30x1.0	9.0	36.0	38.0	6.5	28.5	36
ERA	5E	55	54.0	M45x1.5	10.0	44.5	78.0	9.0	42.5	–
EGG[2]	6E	65	65.0	M55x2.0	10.5	48.5	–	10.0	52.0	–

P1 Panel cut-out (page 153)

Note: The 5E and 6E series are delivered with a round nut.
[1] unipole model.
[2] with key (G).

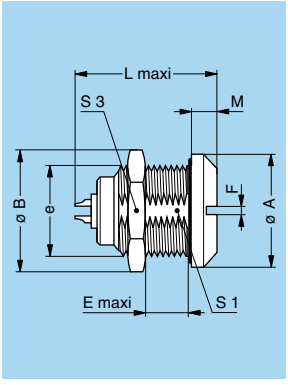

ERC Fixed socket, nut fixing with slot in the flange

Reference		Dimensions (mm)									
Model	Series	A	B	e	E	F	L	L[1]	M	S1	S3
ERC	0E	18	19.2	M14x1.0	5.5	1.5	19.5	20.5	4.0	12.5	17
ERC	3E	31	34.0	M24x1.0	11	3.0	34.0	35.0	6.0	22.5	30
ERC	4E	37	40.5	M30x1.0	9	3.0	36.0	38.0	6.5	28.5	36

P1 Panel cut-out (page 153)

Note: [1] unipole model

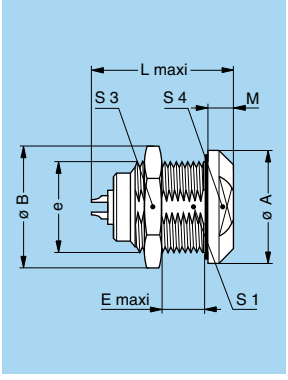

ERB Fixed socket, nut fixing with two flats in the flange

Reference		Dimensions (mm)									
Model	Series	A	B	e	E	L	L[1]	M	S1	S3	S4
ERB	0E	18	19.2	M14x1.0	5.5	19.5	20.5	4.0	12.5	17	14
ERB	1E	20	21.5	M16x1.0	9	24.0	25.3	4.5	14.5	19	17
ERB	2E	25	27.0	M20x1.0	9	28.5	30.0	5.0	18.5	24	20
ERB	3E	31	34.0	M24x1.0	11	34.0	35.0	6.0	22.5	30	24

P1 Panel cut-out (page 153)

Note: [1] unipole model

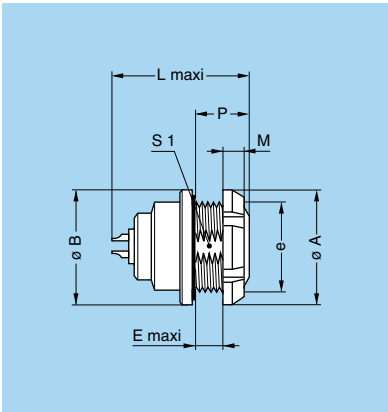

EEP Fixed socket, nut fixing (back panel mounting)

Reference		Dimensions (mm)								
Model	Series	A	B	e	E	L	L[1)]	M	P	S1
EEP	0E	18	18	M14x1.0	3.5	19.5	20.5	3.5	7	12.5
EEP	1E	20	20	M16x1.0	6.5	24.0	25.3	3.5	10	14.5
EEP	2E	25	25	M20x1.0	6.5	28.5	30.0	3.5	10	18.5
EEP	3E	30	31	M24x1.0	7.5	34.0	35.0	4.5	12	22.5

P1 Panel cut-out (page 153)

Note: [1)] unipole model

Note: the 3E series is delivered with a conical nut.

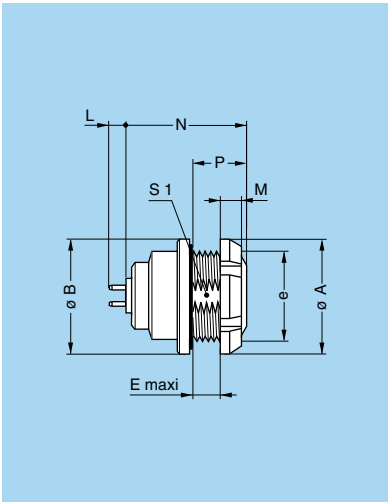

EEP Fixed socket, nut fixing, with straight contact for printed circuit (back panel mounting)

Reference		Dimensions (mm)							
Model	Series	A	B	e	E	M	N	P	S1
EEP	0E	18	18	M14x1.0	3.5	3.5	16.0	7	12.5
EEP	1E	20	20	M16x1.0	6.5	3.5	21.5	10	14.5
EEP	2E	25	25	M20x1.0	6.5	3.5	24.0	10	18.5
EEP	3E	30	31	M24x1.0	7.5	4.5	29.5	12	22.5

P1 Panel cut-out (page 153)

P21 PCB drilling pattern (page 159)

Note: this contact type is available for all E●● socket models.
See page 159 for table of available types.
Length «L» depends on the number of contacts, see PCB drilling pattern on page 159. The 3E series is delivered with a conical nut.

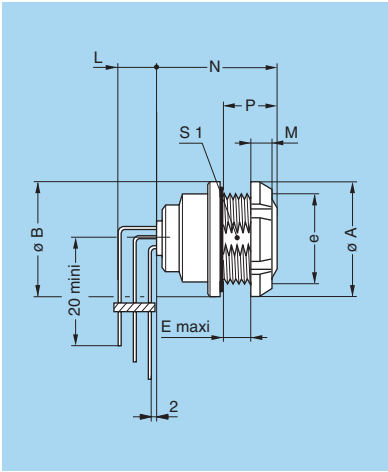

EEP Fixed socket, nut fixing, with elbow (90°) contacts for printed circuit (back panel mounting)

Reference		Dimensions (mm)							
Model	Series	A	B	e	E	M	N	P	S1
EEP	1E	20	20	M16x1.0	6.5	3.5	21.5	10	14.5
EEP	2E	25	25	M20x1.0	6.5	3.5	24.0	10	18.5

P1 Panel cut-out (page 153)

P24 PCB drilling pattern (page 160)

Note: this contact type is available for all back panel mounting socket types. See page 160 for available types.
Length «L» depends on the number of contacts, see PCB drilling pattern on page 160.

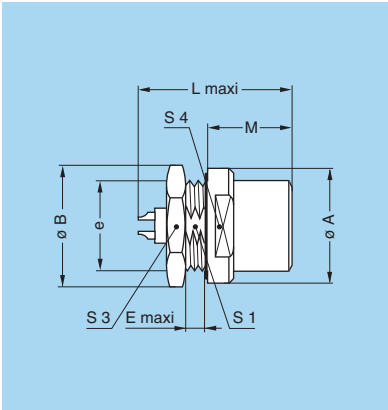

EHP Fixed socket, nut fixing, protruding shell

Reference		Dimensions (mm)									
Model	Series	A	B	e	E	L	L[1)]	M	S1	S3	S4
EHP	0E	18	19.2	M14x1.0	1.5	19.5	20.5	10.5	12.5	17	15
EHP	1E	20	21.5	M16x1.0	1.5	24.0	25.3	15.5	14.5	19	17
EHP	2E	25	27.0	M20x1.0	1.5	28.5	30.0	17.0	18.5	24	20

P1 Panel cut-out (page 153)

Note: [1)] unipole model

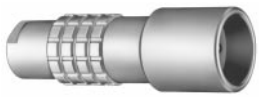

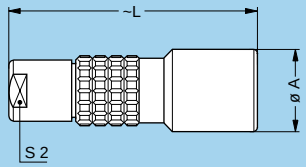

PCA Free socket, cable collet

Reference		Dimensions (mm)		
Model	Series	A	L	S2
PCA	0E	13	34.0	8
PCA	1E	15	45.0	9
PCA	2E	19	54.0	12
PCA	3E	23	65.0	15
PCA	4E	29	75.5	19
PCA	5E	42	95.0	32
PHG[1)]	6E	52	125.0	38

M1
Cable assembly
(pages 167 and 168)

Note: 1) with key (G)

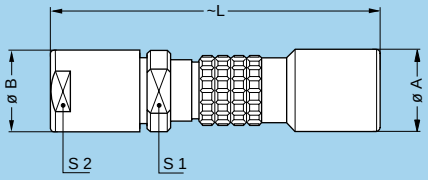

PCA Free socket with oversize cable collet 1)

Reference		Dimensions (mm)				
Model	Series	A	B	L	S1	S2
PCA	1E	15	14.5	58.0	12	12
PCA	2E	19	17.0	67.0	15	15
PCA	3E	23	22.0	84.0	19	19
PCA	4E	29	36.0	109.0	30	32

M2 Cable assembly (pages 167 and 169)

Note: 1) correspond to K type of collet, the fitting of oversize collets onto this model allows them to be fitted to the cables that can be accommodated by the next housing size up (see page 105).

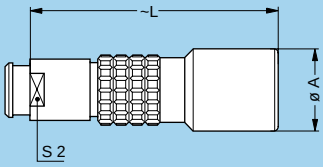

PCA Free socket, cable collet and nut for fitting a bend relief 1)

Reference		Dimensions (mm)		
Model	Series	A	L	S2
PCA	0E	13	34.0	7
PCA	1E	15	45.0	9
PCA	2E	19	54.0	12
PCA	3E	23	64.0	15
PCA	4E	29	75.5	19

M1
Cable assembly
(pages 167 and 168)

Note: 1) to order, add a «Z» at the end of the reference.
The bend relief must be ordered separately (see page 141).

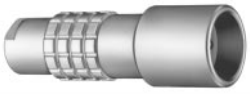

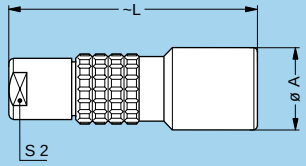

PCP Free socket, cable collet and inner anti-rotating device

Reference		Dimensions (mm)		
Model	Series	A	L	S2
PCP	3E	23	65.0	15
PCP	4E	29	75.5	19

M1 Cable assembly (pages 167 and 168)

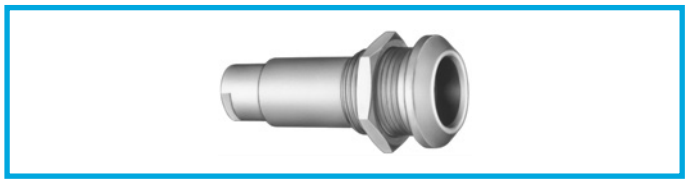

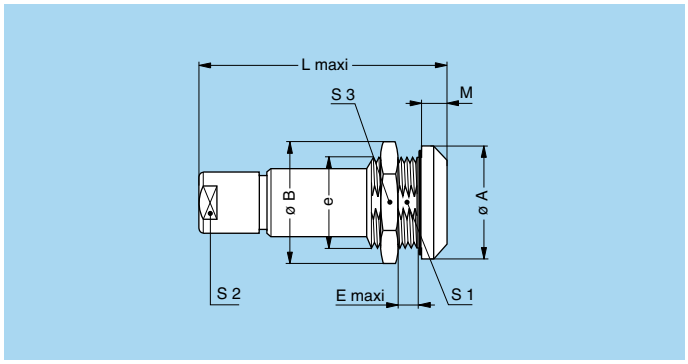

PSA Fixed socket, nut fixing, cable collet

Reference		Dimensions (mm)								
Model	Series	A	B	e	E	L	M	S1	S2	S3
PSA	0E	18	19.2	M14x1.0	5.5	34.0	4.0	12.5	8	17
PSA	1E	20	21.5	M16x1.0	9.0	45.0	4.5	14.5	9	19
PSA	2E	25	27.0	M20x1.0	9.0	54.0	5.0	18.5	12	24
PSA	3E	31	34.0	M24x1.0	11.0	65.0	6.0	22.5	15	30
PSA	4E	37	40.5	M30x1.0	9.0	75.5	6.5	28.5	19	36
PSA	5E	51	54.0	M45x1.5	10.0	95.0	9.0	–	32	54
PKG[1)]	6E	65	65.0	M55x2.0	10.5	125.0	10.0	–	38	–

P1 Panel cut-out (page 153)

M1 Cable assembly (pages 167 and 168)

Note: [1)] with key (G).
The 5E and 6E series are delivered with a round nut.

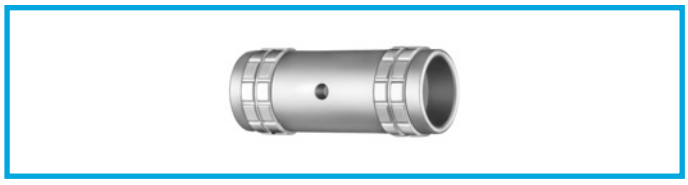

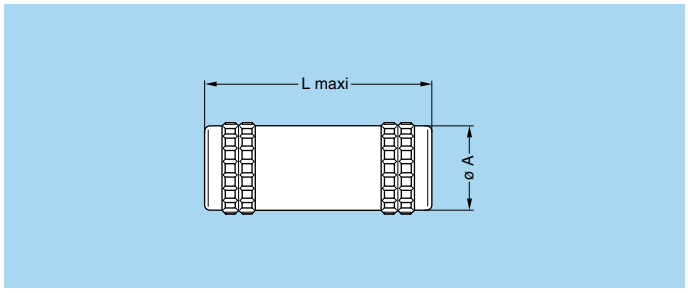

RMA Free coupler

Reference		Dim. (mm)	
Model	Series	A	L
RMA	0E	14	30
RMA	1E	16	40
RMA	2E	20	44
RMA	3E	25	54
RMA	4E	30	57
RMA	5E	44	67

Note: see page 101 for the available plug and contact configurations and in order to ensure correct contact alignment.

Watertight or vacuumtight models

These socket or coupler models allow the device on which they are fitted to reach a protection index of IP 68 as per IEC 60529. They are fully compatible with plugs of the same series and are widely used for portable radios, military, laboratory equipment, aviation, etc.
These models are identified by a letter «P» at the end of the reference.
Most of these models are also available in a vacuumtight version. Such models are identified by an additional letter «V» at the end of the part number (certificate on request).
Epoxy resin is used to seal these models.

Technical Characteristics

Mechanical and Climatical

Characteristics	Value	Standard
Endurance	> 5000 cycles	IEC 60512-5 test 9a
Humidity	up to 95% at 60° C	
Temperature range (0E-1E)	- 20° C/+100° C	
Temperature range (2E-6E)	- 20° C/+80° C	
Salt spray corrosion test	> 144h	IEC 60512-6 test 11f
Climatical category	20/80/21	IEC 60068-1
Leakage rate (He)[1)]	< 10^{-7} mbar.l.s^{-1}	IEC 60512-7 test 14b

Note: [1)] only for vacuumtight models.

Characteristics		Value	Standard
Maximum operating pressure[2)]	0E	60 bars	IEC 60512-7 test 14d
	1E	60 bars	
	2E	40 bars	
	3E	30 bars	
	4E	15 bars	
	5E	5 bars	
	6E	5 bars	

Note: [2)] this value corresponds to the maximum allowed pressure difference for the assembled socket.

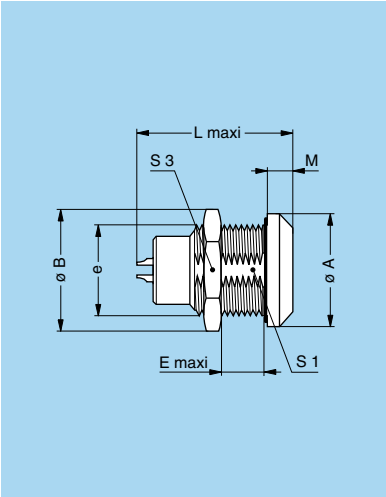

HGP Fixed socket, nut fixing, watertight or vacuumtight

Reference		Dimensions (mm)								
Model	Series	A	B	e	E	L	L[1)]	M	S1	S3
HGP	0E	18	19.2	M14x1.0	5.5	23.5	22.0	4.0	12.5	17
HGP	1E	20	21.5	M16x1.0	9.0	28.0	28.0	4.5	14.5	19
HGP	2E	25	27.0	M20x1.0	10.5	32.5	28.0	5.0	18.5	24
HGP	3E	31	34.0	M24x1.0	15.5	39.5	38.5	6.0	22.5	30
HGP	4E	37	40.5	M30x1.0	17.5	43.0	44.0	6.5	28.5	36
HGP	5E	55	54.0	M45x1.5	20.0	52.0	76.0	9.0	42.5	–
HGP[2)]	6E	65	65.0	M55x2.0	20.5	52.0	–	10.0	52.0	–

P1 Panel cut-out (page 153)

Note: The 5E and 6E series are delivered with a round nut.
[1)] unipole model.
[2)] with key (G).

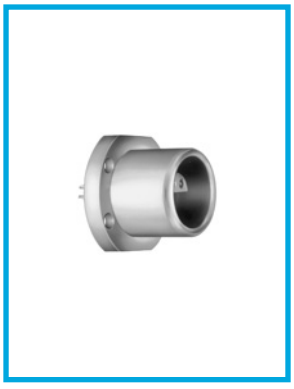

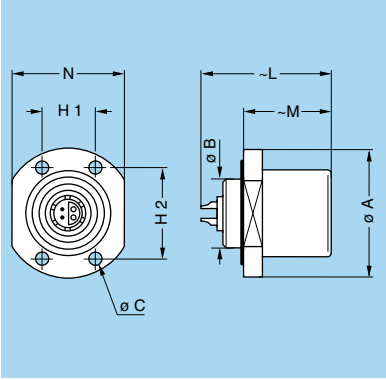

EBR Fixed socket with round flange, watertight, protruding shell and screw fixing

Reference		Dimensions (mm)								
Model	Series	A	B	C	H1	H2	L	L[1)]	M	N
EBR	2E	28	15	2.8	11.8	20.4	32.5	28.0	19	25

P6 Panel cut-out (page 153)

Note: [1)] unipole model.
This model is only available in a watertight version.

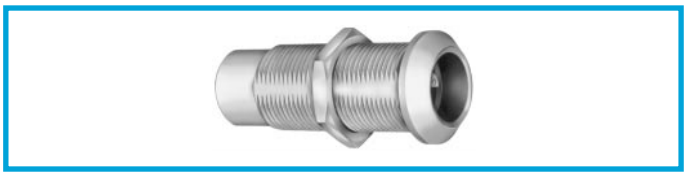

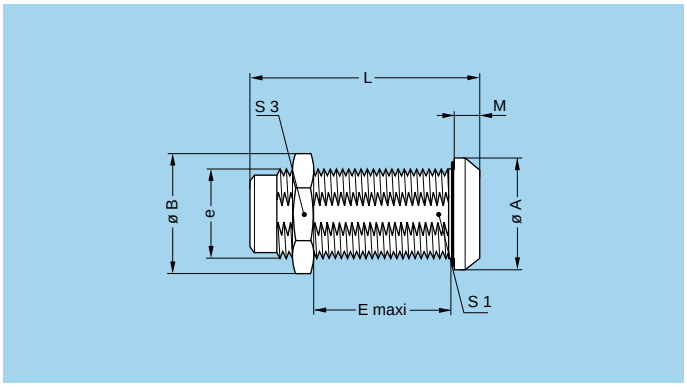

SWH Fixed coupler, nut fixing, watertight or vacuumtight

Reference		Dimensions (mm)							
Model	Series	A	B	e	E	L	M	S1	S3
SWH	0E	18	19.2	M14x1.0	22.5	36.0	4.0	12.5	17
SWH	1E	20	21.5	M16x1.0	30.5	47.0	4.5	14.5	19
SWH	2E	25	27.0	M20x1.0	28.0	52.4	5.0	18.5	24
SWH	3E	31	34.0	M24x1.0	33.0	64.2	6.0	22.5	30
SWH	4E	37	40.5	M30x1.0	44.5	70.0	6.5	28.5	36
SWH	5E	55	54.0	M45x1.5	47.0	81.0	9.0	42.5	–
SWH[1)]	6E	65	65.0	M55x2.0	12.0	76.0	10.0	–	–

P1 Panel cut-out (page 153)

Note: 1) with key (G). The 5E and 6E series are delivered with a round nut. See page 101 for the available plug and contact configurations and in order to ensure correct contact alignment.

L Series

L series connectors have been specifically designed for outdoor applications. This series offer superior polarization combining the stepped insert (half-moon) of the S/E series with the keying system of the K series.
They include an inner sleeve and two seals to prevent penetration of solids or liquids into the housing formed by the plug, free socket, fixed socket or coupler. All models of this series are watertight when mated to give a protection index of IP68 as per IEC 60529 standard (in mated condition) when correctly assembled to an appropriate cable (IP66 otherwise).
L series connectors have the same insulators as the S series and have the following main features:

– security of the Push-Pull latching system
– multipole types 2 to 10 contacts
– stepped insert (half-moon) fitted with male and female contacts
– high packing density for space savings
– keying system («G» key standard) for connector alignment
– watertight connection (IP 68/IP 66)
– solder, crimp or print (straight) contacts
– multiple key options to avoid cross mating of similar connectors
– 360° screening for full EMC shielding
– rugged housing for extreme working conditions.

Metal housing models (page 86)

Fixed plug

FAG

Elbow plug

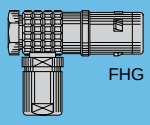

FHG

Straight plugs

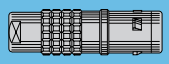

FGG

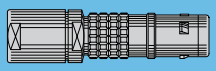

FGG

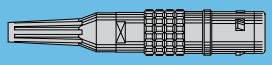

FGG

Fixed sockets

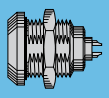

EGG

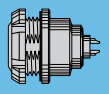

EEG

Free sockets

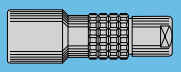

PHG

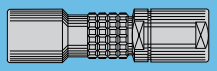

PHG

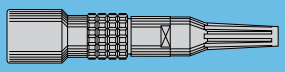

PHG

Vacuumtight model (page 89)

Fixed socket

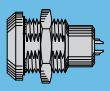

HGG

Fixed socket

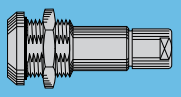

PKG

Part Numbering System

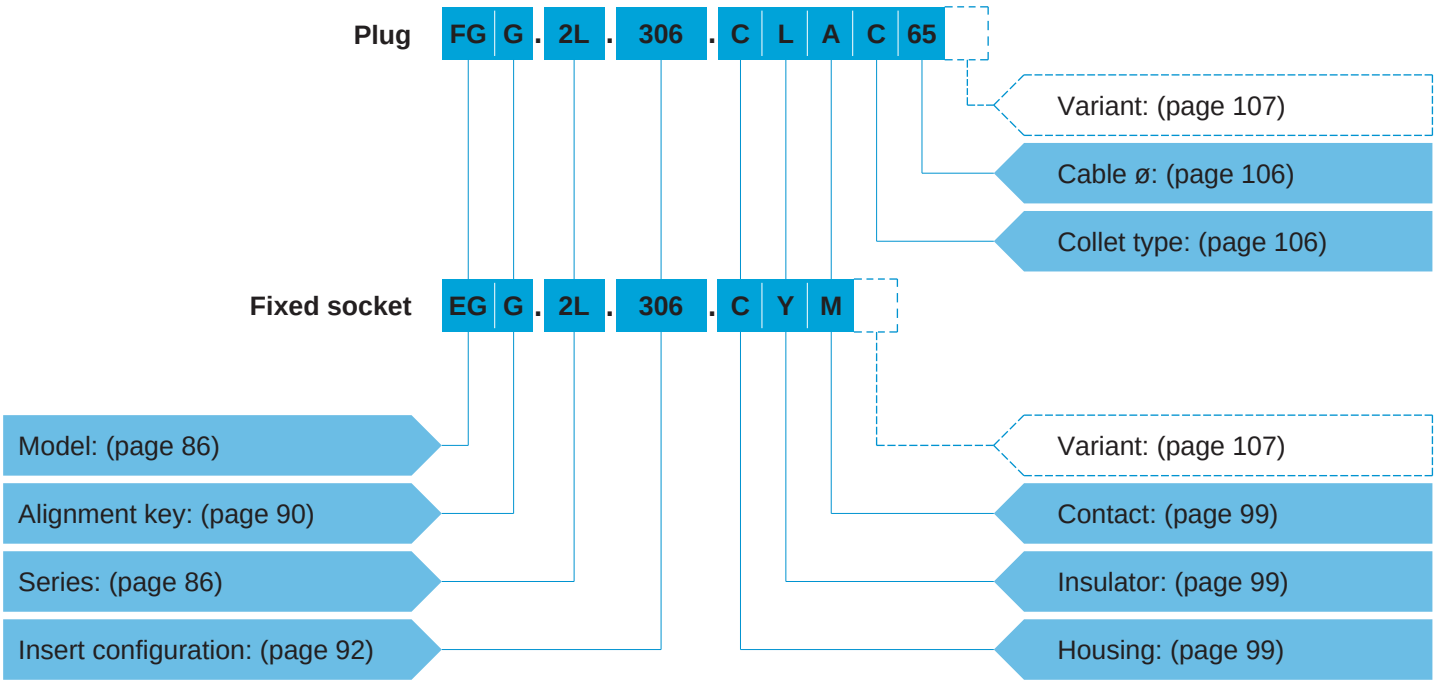

Part Number Example

Straight plug with cable collet:
FGG.2L.306.CLAC65 = straight plug with key (G) and cable collet, 2L series, multipole type with 6 contacts, outer shell in chrome-plated brass, PEEK insulator, with 3 male and 3 female solder contacts, C type collet for 6.5 mm diameter cable.

Fixed socket:
EGG.2L.306.CYM = fixed socket, nut fixing, with key (G), 2L series, multipole type with 6 contacts, outer shell in chrome-plated brass, PEEK extended insulator, with 3 female and 3 male crimp contacts.

Part Section Showing Internal Components

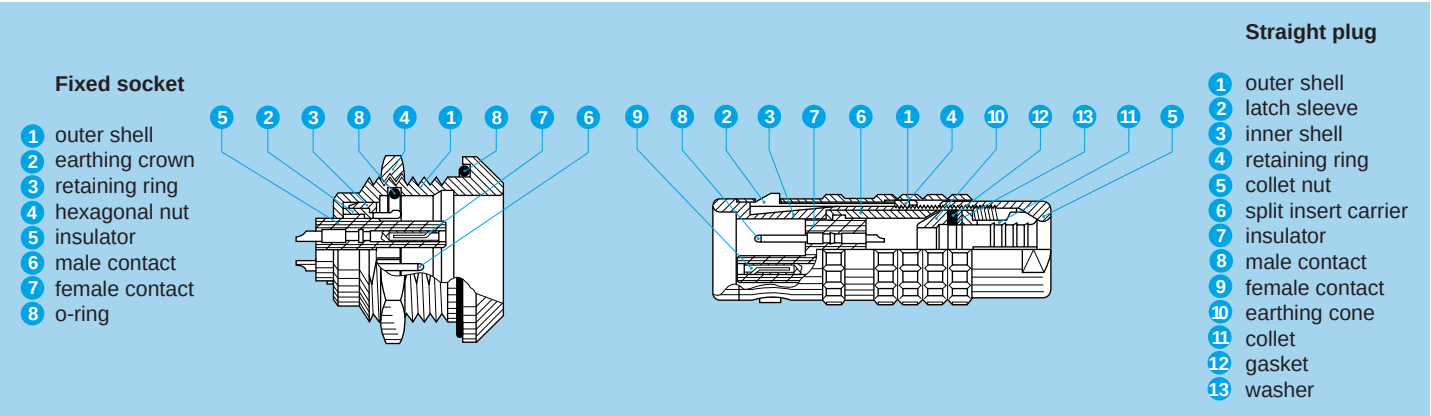

Metal housing models

Technical Characteristics

Mechanical and Climatical

Characteristics	Value	Standard
Endurance	> 5000 cycles	IEC 60512-5 test 9a
Humidity	up to 95% at 60° C	
Temperature range[1)]	- 55° C, +200° C	
Resistance to vibrations	10-2000 Hz, 15 g	IEC 60512-4 test 6d
Shock resistance	100 g, 6 ms	IEC 60512-4 test 6c
Salt spray corrosion test	> 144h	IEC 60512-6 test 11f
Protection index (mated)[2)]	IP 68/IP 66	IEC 60529
Climatical category	50/175/21	IEC 60068-1

Electrical

Characteristics		Value	Standard
Shielding efficiency	at 10 MHz	> 95 dB	IEC 60169-1-3
	at 1 GHz	> 80 dB	IEC 60169-1-3

Note:
The various tests have been carried out with FGG and EGG connector pairs, with chrome-plated brass shell, PEEK insulator and silicone O-ring. Detailed electrical characteristics, as well as materials and treatment are presented in the chapter Technical Characteristics on page 171.
1) minimum operating temperature is -20°C for sockets fitted with an FPM (Viton®) O-ring.
2) IP68 achieved providing that the cable is perfectly circular and that assembly process ensures a high integrity seal.

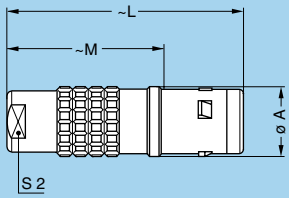

FGG Straight plug, key (G) or keys (A to C and L), cable collet

Reference		Dimensions (mm)			
Model	Series	A	L	M	S2
FGG	0L	11	34	23.0	8
FGG	1L	13	42	28.0	9
FGG	2L	16	52	36.0	12

M1 Cable assembly (page 170)

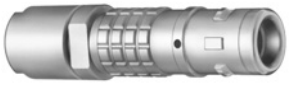

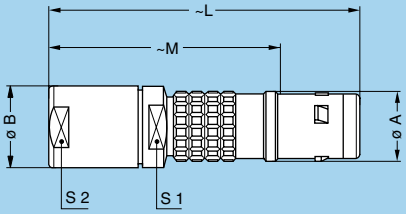

FGG Straight plug, key (G) or keys (A to C and L), cable collet and oversize cable collet [1)]

Reference		Dimensions (mm)					
Model	Series	A	B	L	M	S1	S2
FGG	1L	13	14.5	60	46	12	12
FGG	2L	16	17.0	68	52	15	15

M2 Cable assembly (page 170)

Note: 1) correspond to K type of collet, the fitting of oversize collets onto this model allows them to be fitted to the cables that can be accommodated by the next housing size up (see page 106).

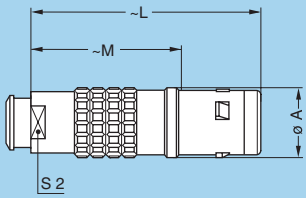

FGG Straight plug, key (G) or keys (A to C and L), cable collet and nut for fitting a bend relief [1)]

Reference		Dimensions (mm)			
Model	Series	A	L	M	S2
FGG	0L	11	34	23	7
FGG	1L	13	42	28	9
FGG	2L	16	52	36	12

M1 Cable assembly (page 170)

Note: 1) to order, add a «Z» at the end of the reference.
The bend relief must be ordered separately (see page 141).

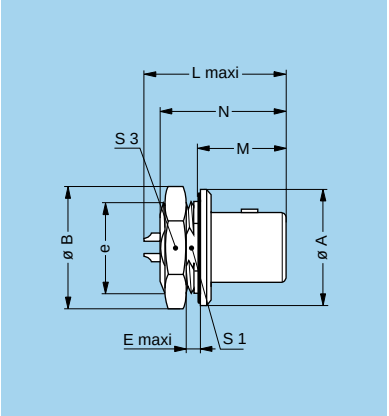

FAG Fixed plug, nut fixing, non-latching, key (G) or keys (A to C and L)

Reference		Dimensions (mm)								
Model	Series	A	B	e	E	L	M	N[1)]	S1	S3
FAG	2L	25	27.0	M20x1.0	4.5	28.2	18.0	28.3	18.5	24

P1 Panel cut-out (page 153)

Note: 1) maximum length with crimp contacts.

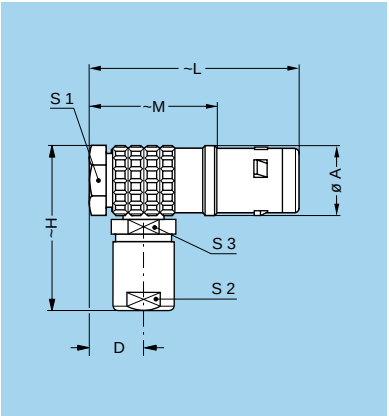

FHG Elbow (90°) plug, key (G) or keys (A to C and L), cable collet

Reference		Dimensions (mm)							
Model	Series	A	D	H	L	M	S1	S2	S3
FHG	0L	11.5	7.6	27	36	25.0	10	8	8
FHG	1L	14.0	8.8	33	43	29.0	12	9	10
FHG	2L	17.5	10.5	40	51	35.0	15	12	13

M3 Cable assembly (page 170)

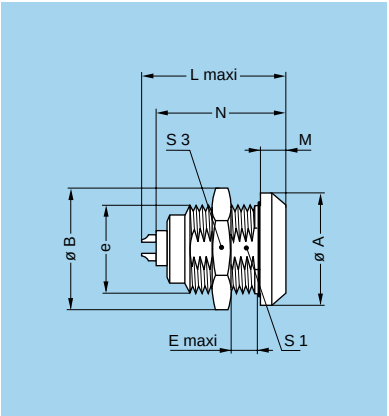

EGG Fixed socket, nut fixing, key (G) or keys (A to C and L)

Reference		Dimensions (mm)								
Model	Series	A	B	e	E	L	M	N[1)]	S1	S3
EGG	0L	18	19.2	M14x1.0	6	21.7	4.0	20.1	12.5	17
EGG	1L	20	21.5	M16x1.0	9	27.0	4.5	25.1	14.5	19
EGG	2L	25	27.0	M20x1.0	9	30.7	5.0	28.6	18.5	24

P1 Panel cut-out (page 153)

Note: 1) maximum length with crimp contacts.

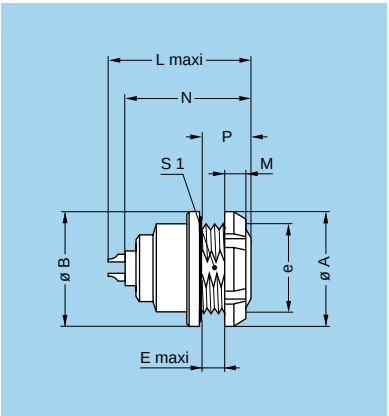

EEG Fixed socket, nut fixing, key (G) or keys (A to C and L) (back panel mounting)

Reference		Dimensions (mm)								
Model	Series	A	B	e	E	L	M	N[1)]	P	S1
EEG	0L	18.0	18	M14x1.0	3.4	21.7	3.5	20.1	7.0	12.5
EEG	1L	20.0	20	M16x1.0	6.2	27.0	3.5	25.1	10.0	14.5
EEG	2L	25.0	25	M20x1.0	5.0	30.7	3.5	28.6	10.0	18.5

P1 Panel cut-out (page 153)

Note: 1) maximum length with crimp contacts.

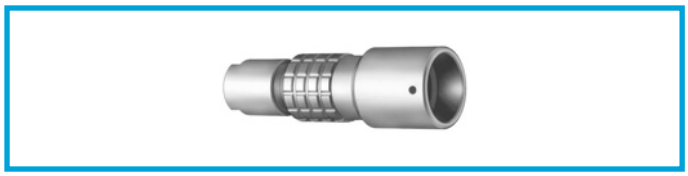

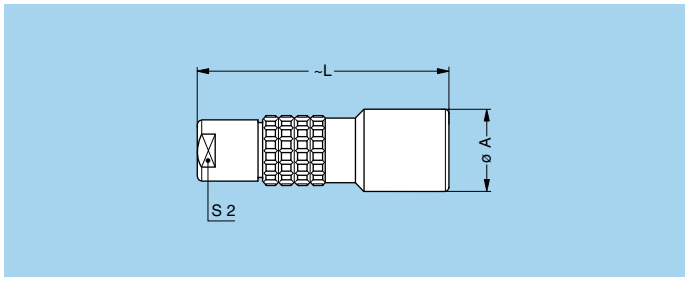

PHG Free socket, key (G) or keys (A to C and L), cable collet

Reference		Dimensions (mm)		
Model	Series	A	L	S2
PHG	0L	13	34.0	8
PHG	1L	15	45.0	9
PHG	2L	19	54.0	12

M1 Cable assembly (page 170)

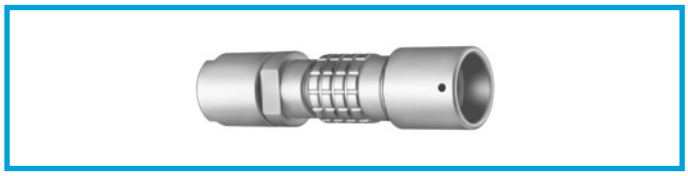

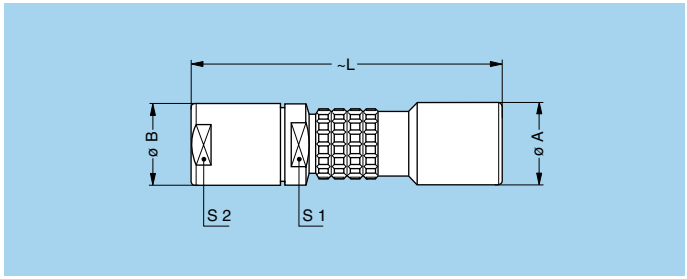

PHG Free socket, key (G) or keys (A to C and L), cable collet and oversize cable collet [1)]

Reference		Dimensions (mm)				
Model	Series	A	B	L	S1	S2
PHG	1L	15	14.5	63	12	12
PHG	2L	19	17.0	70	15	15

M2 Cable assembly (page 170)

Note: [1)] correspond to K type of collet, the fitting of oversize collets onto this model allows them to be fitted to the cables that can be accommodated by the next housing size up (see page 106).

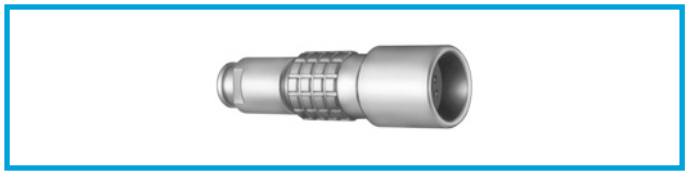

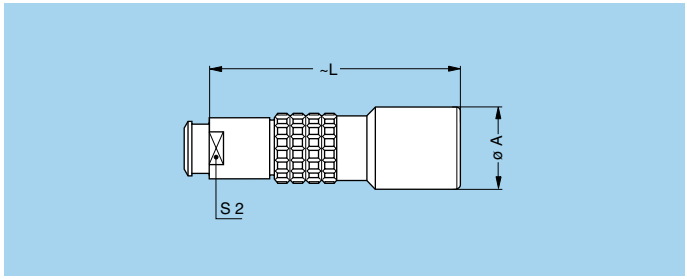

PHG Free socket, key (G) or keys (A to C and L), cable collet and nut for fitting a bend relief [1)]

Reference		Dimensions (mm)		
Model	Series	A	L	S2
PHG	0L	13	34.0	7
PHG	1L	15	45.0	9
PHG	2L	19	54.0	12

M1 Cable assembly (page 170)

Note: [1)] to order, add a «Z» at the end of the reference.
The bend relief must be ordered separately (see page 141).

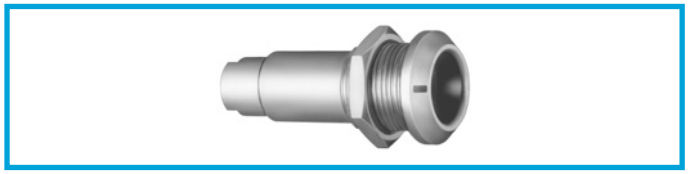

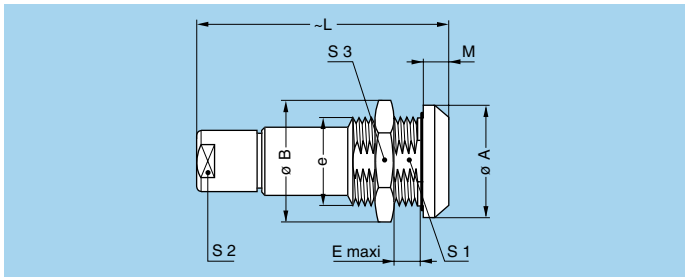

PKG Fixed socket, nut fixing, key (G) or keys (A to C and L), cable collet

Reference		Dimensions (mm)								
Model	Series	A	B	e	E	L	M	S1	S2	S3
PKG	0L	18	19.2	M14x1.0	6	34.0	4.0	12.5	8	17
PKG	1L	20	21.5	M16x1.0	9	45.0	4.5	14.5	9	19
PKG	2L	25	27.0	M20x1.0	9	54.0	5.0	18.5	12	24

M1 Cable assembly (page 170)

P1 Panel cut-out (page 153)

Watertight or vacuumtight models

This socket model allow the device on which they are fitted to reach a protection index of IP68 as per IEC 60529.
This model is also available in a vacuumtight version. It is identified by the letter «PV» at the end of the part number (certificate on request).
Epoxy resin is used to seal this model.

Technical Characteristics

Mechanical and Climatical

Characteristics	Value	Standard
Endurance	> 5000 cycles	IEC 60512-5 test 9a
Humidity	up to 95% at 60° C	
Temperature range (0L-1L)	- 20° C/+100° C	
Temperature range (2L)	- 20° C/+80° C	
Salt spray corrosion test	> 144h	IEC 60512-6 test 11f

Characteristics		Value	Standard
Climatical category		20/80/21	IEC 60068-1
Leakage rate (He)		< 10^{-7} mbar.l.s^{-1}	IEC 60512-7 test 14b
Maximum operating pressure[1)]	0L	60 bars	IEC 60512-7 test 14d
	1L	60 bars	
	2L	40 bars	

Note: [1)] this value corresponds to the maximum allowed pressure difference for the assembled socket.

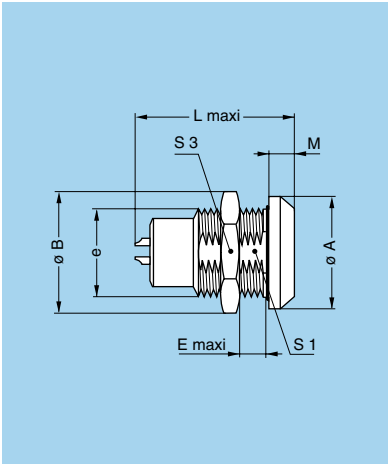

HGG Fixed socket, nut fixing, key (G) or keys (A to C and L), vacuumtight

Reference		Dimensions (mm)							
Model	Series	A	B	e	E	L	M	S1	S3
HGG	0L	18	19.2	M14x1.0	5.5	21.7	4.0	12.5	17
HGG	1L	20	21.5	M16x1.0	9.0	30.0	4.5	14.5	19
HGG	2L	25	27.0	M20x1.0	13.0	33.7	5.0	18.5	24

P1 Panel cut-out (page 153)

Alignment Key (L series)

Alignment Key and Polarized Keying System

L series connector model part numbers are composed of three letters. The LAST LETTER indicates the key position and the contact type (male or female).

Front view of a socket

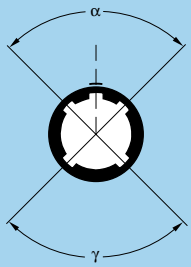

Reference	Nb of keys	Angles	Series			Contact type		Note
			0L	1L	2L	Plug	Socket	
G	1		0°	0°	0°	male	female	●
A	2	α	30°	30°	30°	male	female	●
B	2		45°	45°	45°	male	female	○
J	2	γ	105°	105°	105°	female	male	○
L	2		75°	75°	75°	male	female	●[1)]

Note: [1)] that contact type is not as for the K series.
● First choice alternative
○ Special order alternative

Insert configuration (S, E and L series)

Unipole

	Male solder contacts	Female solder contacts	Reference	Series: Standard	Series: Watertight	ø A (mm)	Contact type: Solder	Contact type: Crimp	Test voltage (kV rms)[1]	Test voltage (kV dc)[1]	Rated current (A)[1]
00			113	00	–	1.3	●[2]	●	0.8	1.2	8
0S 0E			116	0S	0E	1.6	●[2]	–	1.5	2.1	12
1S 1E			120	1S	1E	2.0	●[2]	–	1.9	2.7	18
			130	1S	1E	3.0	●	–	1.5	2.1	25
2S 2E			130	2S	2E	3.0	●	–	2.1	3.0	30
			140	2S	2E	4.0	●	–	1.7	2.4	40
3S 3E			140	3S	3E	4.0	●	–	2.3	3.3	43
			160	3S	3E	6.0	●	–	1.7	2.4	65
4S 4E			140	4S	–	4.0	●	–	3.0	4.2	46
			160	4S	4E	6.0	●	–	2.7	3.9	70
5S 5E			112	5S	5E	12.0	●	–	1.5	2.1	230

Note: [1] see calculation method, caution and suggested standard on page 178.
[2] also available with inversed contacts: plug = female, socket = male.

Multipole

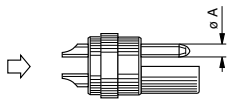

Male solder contacts

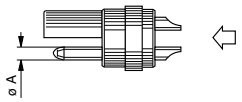

Female solder contacts

	Reference	Series: Standard	Series: Watertight	Number of contacts	ø A (mm)	Contact type: Solder	Contact type: Crimp	Contact type: Print (straight)	Contact type: Print (elbow)	Test voltage (kV rms)[1) 2)]	Test voltage (kV dc)[1) 2)]	Rated current (A)[1)]
0S 0E 0L	302	0S	0E	2	0.9	●	●	●	●	1.1	1.6	10[3)]
	303	0S	0E	3	0.7	●	○	●	●	1.0	1.5	7[3)]
	304	0S	0E	4	0.7	●	●	●	●	1.0	1.5	7[3)]
1S 1E 1L	302	1S	1E	2	1.3	●	●	●	●	1.2	1.8	15[3)]
	303	1S	1E	3	0.9	●	○	●	●	1.2	1.8	10[3)]
	304	1S	1E	4	0.9	●	●	●	●	1.2	1.8	10[3)]
	305	1S	1E	2 3	0.9 0.7	●	○	●	●	1.5 1.5	2.1 2.1	10[3)] 7[3)]
	306	1S	1E	6	0.7	●	○	●	●	1.5	2.1	7[3)]
2S 2E 2L	302	2S	2E	2	1.6	●	○	○	○	1.7	2.4	20[4)]
	303	2S	2E	3	1.3	●	○	●	○	1.5	2.1	15[4)]
	304	2S	2E	4	1.3	●	○	●	●	1.7	2.4	15[4)]
	305	2S	2E	5	1.3	●	○	●	●	1.5	2.1	13[4)]
	306	2S	2E	6	1.3	●	●[5)]	●	●	1.5	2.1	12
	307	2S	2E	3 4	1.3 0.9	●	○	●	●	0.8 0.8	1.2 1.2	12[3)] 9[3)]
	308	2S	2E	8	0.9	●	○	●	●	0.8	1.2	9[3)]
	310	2S	2E	10	0.9	●	○	●	●	0.8	1.2	7[3)]
3S 3E	302	3S	3E	2	2.0	●	–	○	–	3.0	4.2	23
	303	3S	3E	3	2.0	●	–	○	–	1.5	2.1	20
	304	3S	3E	4	2.0	●	–	○	–	1.5	2.1	18
	305	3S	3E	2 3	2.0 1.3	●	–	○	–	1.5 1.5	2.1 2.1	18 14
	306	3S	3E	6	1.3	●	–	●	–	2.1	3.0	14
	307	3S	3E	7	1.3	●	–	●	–	1.0	1.5	12

Note:
1) see calculation method, caution and suggested standard on page 178.
2) lowest measured value; contact to contact or contact to shell.
3) rated current = 6A for socket with elbow (90°) contacts for printed circuit.
4) rated current = 12A for socket with elbow (90°) contacts for printed circuit.
5) only for FFL model.

● First choice alternative
○ Special order alternative

Multipole

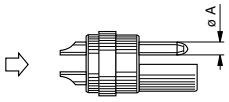

Male solder contacts

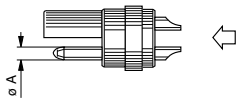

Female solder contacts

	Reference	Series: Standard	Series: Watertight	Number of contacts	ø A (mm)	Contact type: Solder	Contact type: Crimp	Contact type: Print (straight)	Contact type: Print (elbow)	Test voltage (kV rms)[1) 2)]	Test voltage (kV dc)[1) 2)]	Rated current (A)[1)]
3S 3E	308	3S	3E	8	1.3	●	–	●	○	1.0	1.5	10
	310	3S	3E	10	1.3	●	–	●	●	1.0	1.5	9
	312	3S	3E	12	0.9	●	–	●	●	1.5	2.1	8
	313	3S	3E	13	0.9	●	–	●	○	1.5	2.1	8
	314	3S	3E	14	0.9	●	–	●	●	1.5	2.1	7
	316	3S	3E	16	0.9	●	–	●	●	1.0	1.5	7
	318	3S	3E	18	0.9	●	–	●	○	1.0	1.5	6
4S 4E	302	4S	4E	2	4.0	●	–	○	–	2.1	3.0	35
	303	4S	4E	3	3.0	●	–	○	–	2.1	3.0	25
	304	4S	4E	4	3.0	●	–	○	–	2.1	3.0	22
	305	4S	4E	2 3	3.0 2.0	●	–	○	–	2.1 2.1	3.0 3.0	22 16
	306	4S	4E	6	2.0	●	–	○	–	2.1	3.0	16
	307	4S	4E	3 4	2.0 1.3	●	–	○	–	2.1 2.1	3.0 3.0	16 13
	308	4S	4E	8	1.3	●	–	○	–	2.7	3.9	13
	309	4S	4E	9	1.3	●	–	○	–	2.1	3.0	12
	310	4S	4E	10	1.3	●	–	○	–	2.1	3.0	11
	312	4S	4E	12	1.3	●	–	○	–	2.1	3.0	9
	313	4S	–	13	1.3	●	–	○	–	2.1	3.0	9

Note: 1) see calculation method, caution and suggested standard on page 178.
2) lowest measured value; contact to contact or contact to shell.

● First choice alternative
○ Special order alternative

Multipole

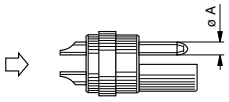

Male solder contacts

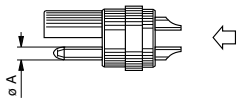

Female solder contacts

	Reference	Series: Standard	Series: Watertight	Number of contacts	ø A (mm)	Contact type: Solder	Contact type: Print (straight)	Contact type: Print (elbow)	Test voltage (kV rms)[1) 2)]	Test voltage (kV dc)[1) 2)]	Rated current (A)[1)]
4S 4E	314	4S	4E	14	1.3	●	○	–	2.1	3.0	9
	316	4S	4E	16	0.9	●	○	–	2.1	3.0	7
	318	4S	4E	18	0.9	●	○	–	2.1	3.0	7
	320	4S	4E	20	0.9	●	○	–	2.1	3.0	7
	322	4S	4E	22	0.9	●	○	–	2.1	3.0	7
	324	4S	4E	24	0.9	●	○	–	2.1	3.0	7
5S 5E	302	5S	5E	2	6.0	●	–	–	3.7	5.2	50
	303	5S	5E	1 2	6.0 4.0	●	–	–	3.7 3.7	5.2 5.2	50 35
	304	5S	5E	4	4.0	●	–	–	3.7	5.2	35
	305	5S	5E	2 3	4.0 3.0	●	–	–	3.0 3.0	4.2 4.2	35 25
	306	5S	5E	6	3.0	●	–	–	3.0	4.2	25
	308	5S	5E	8	3.0	●	–	–	2.1	3.0	22
	310	5S	5E	10	2.0	●	–	–	2.1	3.0	18

Note: 1) see calculation method, caution and suggested standard on page 178.
2) lowest measured value; contact to contact or contact to shell.

Multipole

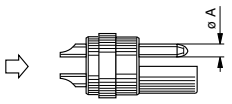

Male solder contacts

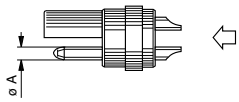

Female solder contacts

5S
5E

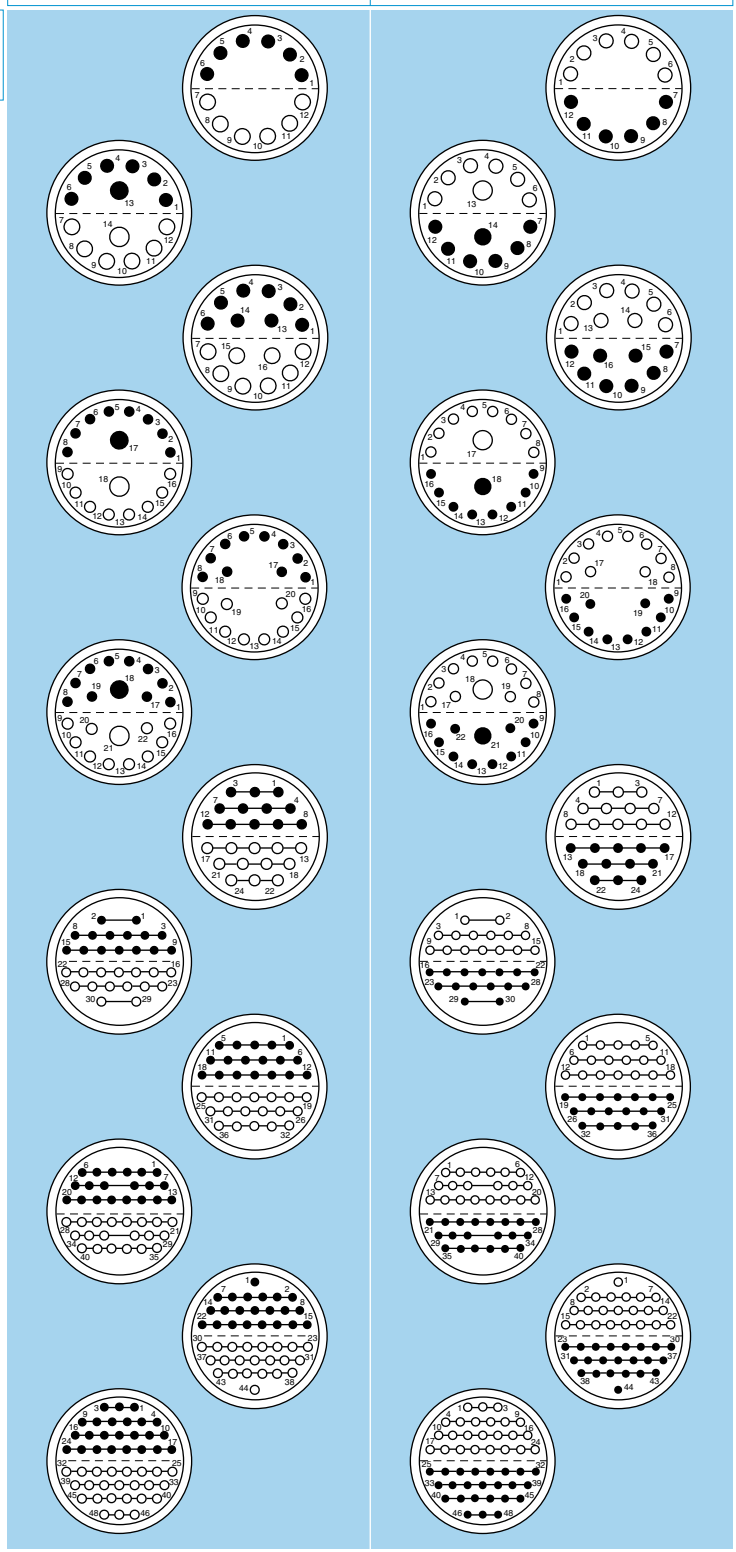

Reference	Series: Standard	Series: Watertight	Number of contacts	ø A (mm)	Contact type: Solder	Contact type: Print (straight)	Contact type: Print (elbow)	Test voltage (kV rms)[1) 2)]	Test voltage (kV dc)[1) 2)]	Rated current (A)[1)]
312	5S	5E	12	2.0	●	–	–	2.1	3.0	18
314	5S	5E	2 12	3.0 2.0	●	–	–	1.8 1.8	2.4 2.4	20 15
316	5S	5E	16	2.0	●	–	–	1.8	2.4	15
318	5S	5E	2 16	3.0 1.6	●	–	–	1.8 1.8	2.4 2.4	18 11
320	5S	5E	20	1.6	●	–	–	1.8	2.4	11
322	5S	5E	2 20	3.0 1.6	●	–	–	1.8 1.8	2.4 2.4	16 9
324	5S	5E	24	1.6	●	–	–	2.7	3.9	9
330	5S	5E	30	1.3	●	–	–	1.8	2.4	8
336	5S	5E	36	1.3	●	–	–	1.8	2.4	7
340	5S	5E	40	1.3	●	–	–	1.2	1.8	7
344	5S	5E	44	1.3	●	–	–	1.2	1.8	6
348	5S	5E	48	1.3	●	–	–	1.2	1.8	6

Note: 1) see calculation method, caution and suggested standard on page 178.
2) lowest measured value; contact to contact or contact to shell.

Multipole

6S
6E

Male solder contacts	Female solder contacts	Reference	Series: Standard	Series: Watertight	Number of contacts	ø A (mm)	Solder contacts	Test voltage (kV rms)[1) 2)]	Test voltage (kV dc)[1) 2)]	Rated current (A)[1)]
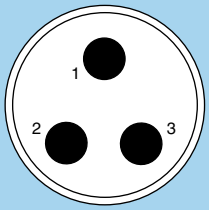	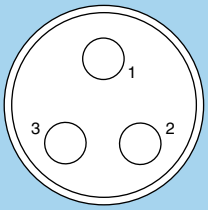	303	–	6E	3	6.0	●	3.0	4.2	50
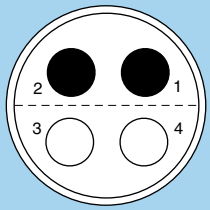	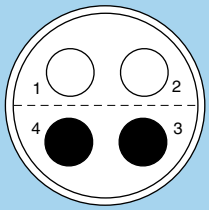	304	6S	6E	4	8.0	●	3.0	4.2	60
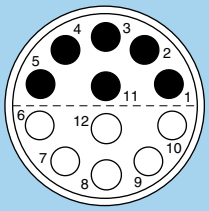	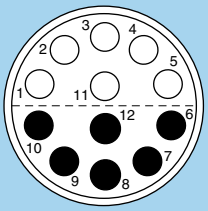	312	6S –	– 6E	12 12	4.0 5.0	●	2.1	3.0	22
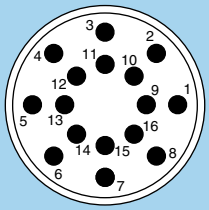	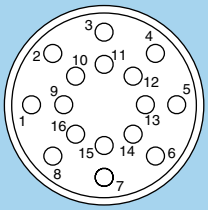	316	–	6E	16	3.0	●	1.5	2.1	14
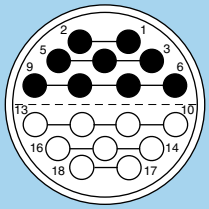	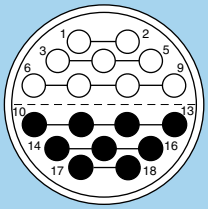	318	6S	–	18	4.0	●	1.2	1.8	16
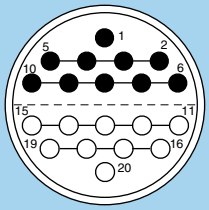	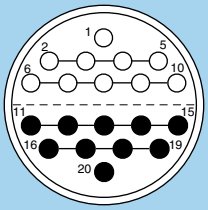	320	6S	–	20	3.0	●	1.5	2.1	14
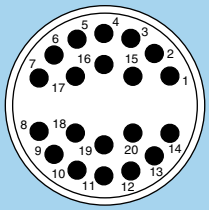	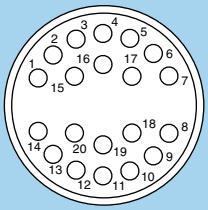	320	–	6E	20	3.0	●	1.5	2.1	14

Note: [1)] see calculation method, caution and suggested standard on page 178.
[2)] lowest measured value; contact to contact or contact to shell.

Multipole

6S
6E

Male solder contacts	Female solder contacts	Reference	Series: Standard	Series: Watertight	Number of contacts	ø A (mm)	Solder contacts	Test voltage (kV rms)[1) 2)]	Test voltage (kV dc)[1) 2)]	Rated current (A)[1)]
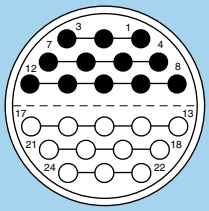	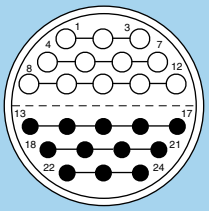	324	6S	–	24	3.0	●	1.2	1.8	12
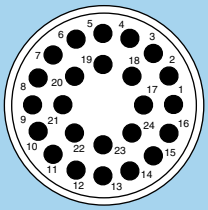	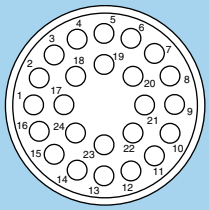	324	–	6E	24	3.0	●	1.2	1.8	12
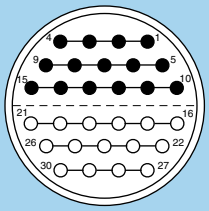	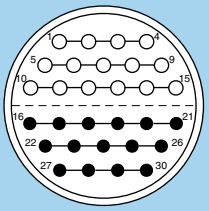	330	6S	6E	30	2.0	●	2.1	3.0	10
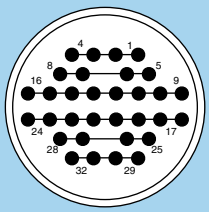	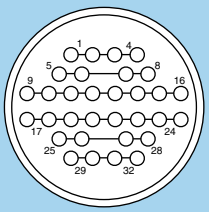	332	–	6E	32	2.0	●	1.5	2.1	10
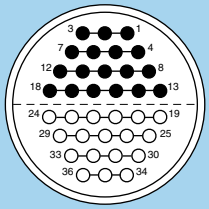	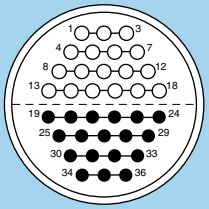	336	6S	–	36	2.0	●	1.5	2.1	8
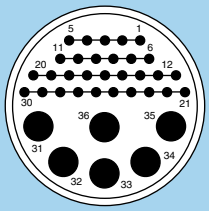	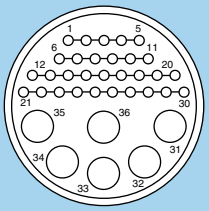	336	–	6E	30 6	1.3 5.0	●	1.5 1.5	2.1 2.1	4 22
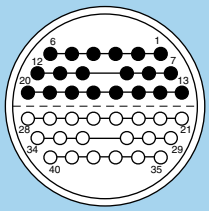	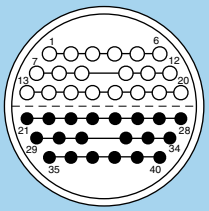	340	–	6E	40	2.0	●	1.5	2.1	8

Note: 1) see calculation method, caution and suggested standard on page 178.
2) lowest measured value; contact to contact or contact to shell.

Multipole

6S
6E

Male solder contacts	Female solder contacts	Reference	Series: Standard	Series: Watertight	Number of contacts	ø A (mm)	Solder contacts	Test voltage (kV rms)[1) 2)]	Test voltage (kV dc)[1) 2)]	Rated current (A)[1)]
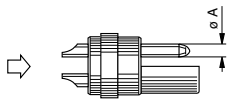	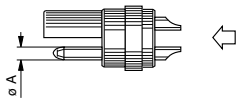	348	6S	6E	48	2.0	●	1.5	2.1	7
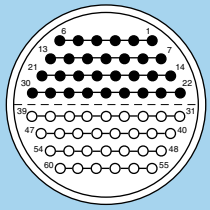	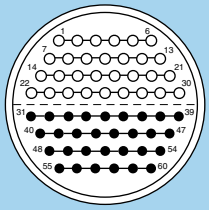	360	6S	6E	60	1.6	●	1.5	2.1	5
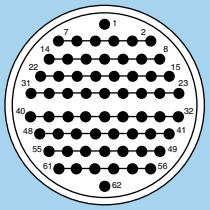	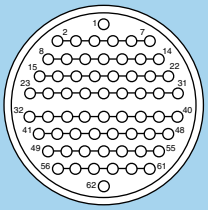	362	–	6E	62	1.6	●	1.5	2.1	5
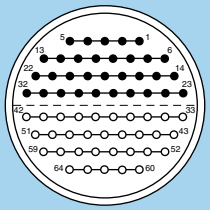	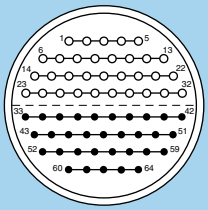	364	6S	6E	64	1.3	●	1.2	1.8	4
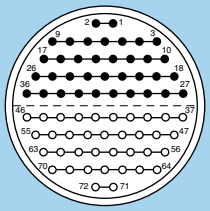	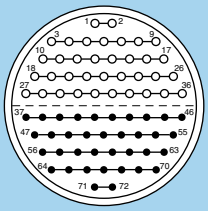	372	6S	6E	72	1.3	●	1.2	1.8	4
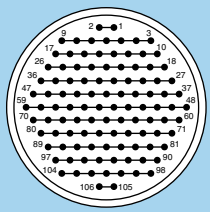	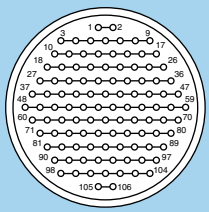	106	–	6E	106	0.9	●	0.8	1.2	2
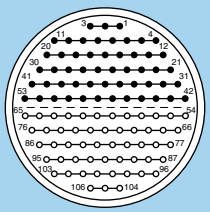	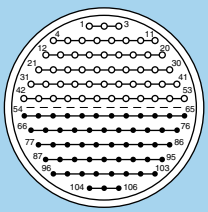	106	6S	–	106	0.9	●	0.8	1.2	2

Note: [1)] see calculation method, caution and suggested standard on page 178.
[2)] lowest measured value; contact to contact or contact to shell.

Housings (S, E and L series)

Ref.	Outer shell and collet nut		Latch sleeve + earthing crown		Other metallic components		Remarks	Note
	Material	Surf. treatment	Material	Surf. treatment	Material	Surf. treatment		
C	Brass	chrome	brass/bronze	nickel 2)	brass	nickel		●
D	Brass	gold-plated	brass/bronze	nickel 2)	brass	nickel		○
N	Brass	nickel	brass/bronze	nickel 2)	brass	nickel		○
K	Brass	black chrome	brass/bronze	nickel 2)	brass	nickel		●
S	Stainless steel	–	brass/bronze	nickel 2)	brass	nickel		○
T	Stainless steel	–	stainless steel	–	brass	nickel		○
U	Stainless steel	–	stainless steel	–	stainless steel	–		○
L	Aluminium alloy	anodized	brass/bronze	nickel 2)	brass	nickel	1)	○
B	POM (black)	–	brass/bronze	nickel 2)	brass	nickel	Only for FFP, ERN and PCP (S series)	●
G	PEEK (natural)	–	brass/bronze	nickel 2)	brass	nickel	Only for FFP, ERN and PCP (S series)	●
P	PSU	–	brass/bronze	nickel 2)	brass	nickel	Only for FFL (S series) 1)	●
R	PPSU	–	brass/bronze	nickel 2)	brass	nickel	Only for FFL (S series) 1)	●
H	PPS/brass	–/nickel	brass/bronze	nickel 2)	brass	nickel	Only for EPL and EXP (S series)	●

Note: detailed characteristics of these materials and treatments are presented on page 171.
1) see «variant» for the colour.
2) in the E and L series, the latch sleeve is chrome-plated.

● First choice alternative
○ Special order alternative

Insulators (S, E and L series)

Ref.	Material	Contact type	Remarks	Note
L	PEEK	Solder or print		●
Y	PEEK	Crimp		●
T	PTFE	Solder	only for unipole types	●
T	FEP	Solder	only for multipole types of the S or E series	○
V	PI	Solder	only for multipole types of the S or E series	○
N	PA6.6	Solder	material for 5S/5E and 6S/6E series multipole inserts	●

Note: detailed characteristics of these materials are presented on page 175.

● First choice alternative
○ Special order alternative

Contacts (S, E and L series)

Soldering characteristics

– no need to order specific tools, a simple soldering iron is sufficient
– ideal for very small and fragile conductors
– contacts with solder cups to allow the solder to flow

Crimping characteristics

– practical, quick contact fixing outside the insulator
– possible use at high temperature
– need to order specific tools
– no risk of heating the insulator during the conductor-contact fixing
– high tensile strength
– totally lead-free solution

Note: see page 176 for more information.

Contacts reference for plugs, free or fixed sockets

Contact type	Reference		Contact			Conductor						F_r [1] (N)	Notes
						Solid		Stranded					
								AWG		Section (mm²)			
	Male	Female	ø A (mm)	ø C (mm)	Form per fig.	AWG max.	Section max. (mm²)	min.	max.	min.	max.		
Solder 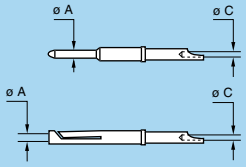	A	L	0.7	0.60	–	24	0.25	–	26	–	0.14	–	●
			0.9	0.80	–	22	0.34	–	22[2]	–	0.34	–	
			1.3	1.00	–	20	0.50	–	20[2]	–	0.50	–	
			1.6	1.40	–	16	1.00	–	18	–	1.00	–	
			2.0	1.80	–	14	1.50	–	16	–	1.50	–	
			3.0	2.70	–	10	4.00	–	12	–	4.00	–	
			4.0	3.70	–	10	6.00	–	10	–	6.00	–	
			5.0	5.20	–	–	–	–	8	–	10.00	–	
			6.0	5.20	–	–	–	–	8	–	10.00	–	
			8.0	7.00	–	–	–	–	4	–	21.00	–	
			12.0	11.50	–	–	–	–	0	–	50.00	–	
fig. 1 Crimp 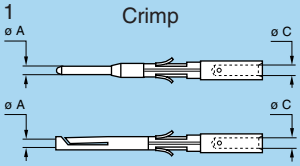	C	M	0.7	0.80	1	–	–	26	22[2]	0.140	0.34	22	●
	B	P		0.45	2	–	–	32	28	0.035	0.09		○
	C	M	0.9	1.10	1	–	–	24	20	0.250	0.50	30	●
	B	P		0.80	2	–	–	26	22[2]	0.140	0.34		○
	G	U		0.45	2	–	–	32	28	0.035	0.09		○
fig. 2 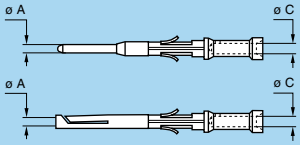	C	M	1.3	1.40	1	–	–	20	18	0.500	1.00	40	●
	B	P		1.10	2	–	–	24	20	0.250	0.50		○
	G	U		0.80	2	–	–	26	22[2]	0.140	0.34		○
	C	M	1.6	1.90	1	–	–	18	14[2]	1.000	1.50	50	●
	B	P		1.40	2	–	–	22	18	0.340	1.00		○
	C	M	2.0	2.40	1	–	–	16	12[2]	1.500	2.50	65	●
	B	P		1.90	2	–	–	18	14	1.000	1.50		○
Print 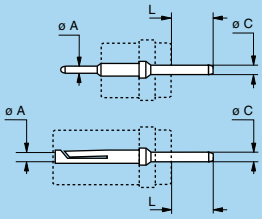	D	N	L dimensions and C are detailed in the section on PCB drilling pattern. See page 159.										●
Print (elbow) 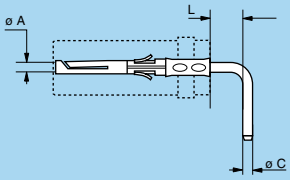	V	V	L dimensions and C are detailed in the section on PCB drilling pattern. See page 160.										●

Note: [1] contact retention force in the insulator (according to IEC 60512-8 test 15 a).
[2] for a given AWG, the diameter of some stranded conductor designs is larger than the solder cup diameter. Make sure that the maximum conductor diameter is smaller than ø C.

● First choice alternative
○ Special order alternative

Contacts reference for coupler and plug with socket

Ref.	Contact type	Remarks
A	Male - Female	contact configuration is explained on page 101
L	Female - Male	contact configuration is explained on page 101
M	Female - Female	contact configuration is explained on page 101
F	Female - Female - Male	for the FTA model of the S series

Contacts reference for fixed and free couplers RMA, RAD and SWH

A Male - Female

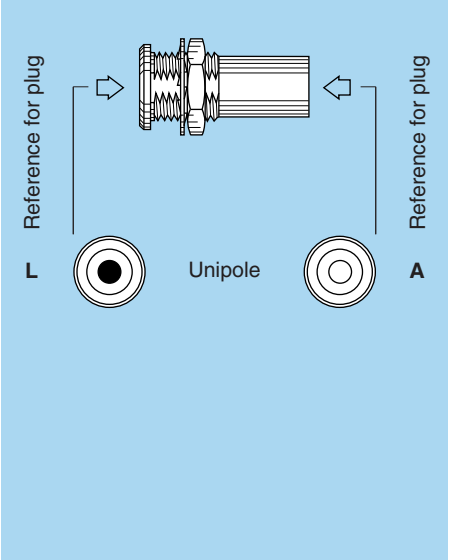

L Female - Male

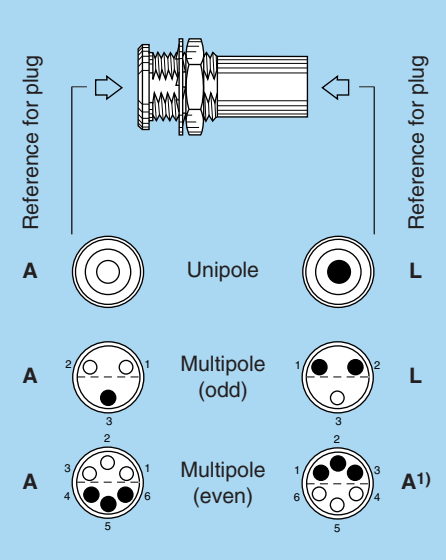

M Female - Female

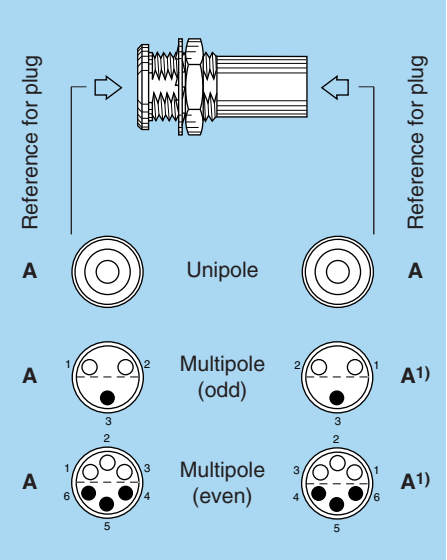

Use of plugs for mating with RAD, RMA and SWH couplers

Unipole type:

Reference M for coupling two identical plugs fitted with male contact (contact reference A).
Reference L for coupling a plug fitted with male contacts (contact reference A) at the flange end for RAD and SWH and an inverted plug fitted with female contacts (contact reference L) at the other end.
Reference A for the inverted version of code L.

Multipole type:

Reference L for coupling a standard plug (contact reference A) at the flange end for RAD and SWH and an inverted plug (contact reference as indicated in the above table) at the other end.
Reference M for coupling two standard plugs (contact type A).
Only available for RAD and RMA models.

Note: 1) this connector combination does not allow for contact numbering. One of the plugs has to be cable mounted in a way to ensure correct signal continuity.

Collets (S, E and L series)

C, K and L type collets for S series

C type

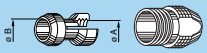

K type
oversize
cable collet

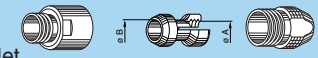

L type
(non EMC)

	Reference		Collet ø		Cable ø		Notes
	Type	Code	ø A	ø B	max.	min.	
00	C	17	1.7	1.5	1.7	1.3	NEW
	C	22	2.2	–	2.2	> 1.7	NEW
	C	27	2.7	–	2.7	> 2.2	NEW
	C	31	3.1	2.7	3.1	> 2.7	NEW
	K	37	3.7	–	3.7	> 3.2	NEW
	K	42	4.2	3.7	4.4	> 3.7	NEW
	L	27	2.7	–	2.6	2.2	
	L	31	3.1	–	3.0	2.6	
0S	C	22	2.2	–	2.2	1.3	NEW
	C	32	3.2	–	3.2	> 2.2	NEW
	C	37	3.7	–	3.7	> 3.2	NEW
	C	44	4.4	3.7	4.4	> 3.7	NEW
	K	52	5.2	–	5.2	> 4.2	NEW
	K	62	6.2	5.2	6.2	> 5.2	NEW
	L	22	2.2	–	2.2	1.3	NEW
	L	32	3.2	–	3.2	> 2.2	NEW
	L	37	3.7	–	3.7	> 3.2	NEW
	L	44	4.4	–	4.3	3.5	1)
	L	48	4.8	–	4.8	4.4	1)

	Reference		Collet ø		Cable ø		Notes
	Type	Code	ø A	ø B	max.	min.	
1S	C	22	2.2	–	2.2	> 1.2	NEW
	C	32	3.2	–	3.2	> 2.2	NEW
	C	42	4.2	–	4.2	> 3.2	NEW
	C	52	5.2	–	5.2	> 4.2	NEW
	C	57	5.7	5.2	5.7	> 4.9	NEW
	C	62	6.2	5.2	6.2	> 5.4	NEW
	K	72	7.2	–	7.2	> 6.2	NEW
	K	82	8.2	6.7	8.2	> 7.2	NEW
	K	87	8.7	6.7	8.7	> 8.2	NEW
	L	22	2.2	–	2.2	1.2	NEW
	L	32	3.2	–	3.2	> 2.2	NEW
	L	42	4.2	–	4.2	> 3.2	NEW
	L	52	5.2	–	5.2	> 4.2	NEW
	L	62	6.2	–	6.2	> 5.2	NEW
	L	66	6.6	–	6.5	5.9	1)

Note:
1) these collets cannot be used for connectors models with nut for fitting a bend relief.
2) these collets are used for the FLA model.
All dimensions are in millimetres.

C, K and L type collets for S series

C type

K type
oversize
cable collet

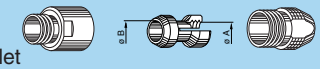

L type
(non EMC)

	Reference		Collet ø		Cable ø		Notes
	Type	Code	ø A	ø B	max.	min.	
2S	C	27	2.7	–	2.7	1.3	NEW
	C	32	3.2	–	3.2	> 2.5	NEW
	C	42	4.2	–	4.2	> 3.2	NEW
	C	52	5.2	–	5.2	> 4.2	NEW
	C	62	6.2	–	6.2	> 5.2	NEW
	C	72	7.2	6.7	7.2	> 6.2	NEW
	C	82	8.2	6.7	8.2	> 7.2	NEW
	C	87	8.7	6.7	8.7	> 8.2	NEW
	K	97	9.7	9.0	9.7	> 8.7	NEW
	K	11	10.5	9.0	10.5	> 9.5	NEW
	L	32	3.2	–	3.2	2.5	NEW
	L	42	4.2	–	4.2	> 3.2	NEW
	L	52	5.2	–	5.2	> 4.2	NEW
	L	62	6.2	–	6.2	> 5.2	NEW
	L	72	7.2	–	7.2	> 6.2	NEW
	L	82	8.2	–	8.2	> 7.2	NEW
	L	87	8.7	–	8.7	> 8.2	NEW[1)]
3S	C	42	4.2	–	4.2	2.7	NEW
	C	57	5.7	–	5.7	> 4.2	NEW
	C	72	7.2	–	7.2	> 5.7	NEW
	C	87	8.7	–	8.7	> 7.2	NEW
	C	97	9.7	9.0	9.7	> 8.7	NEW
	C	11	10.5	9.0	10.5	> 9.5	NEW
	K	12	12.2	–	12.0	11.1	
	K	13	13.2	12.2	13.0	12.1	
	L	42	4.2	–	4.2	2.7	NEW
	L	57	5.7	–	5.7	> 4.2	NEW
	L	72	7.2	–	7.2	> 5.7	NEW
	L	87	8.7	–	8.7	> 7.2	NEW
	L	97	9.7	–	9.7	> 8.7	NEW
	L	11	10.7	–	10.7	> 9.7	NEW[1)]

	Reference		Collet ø		Cable ø		Notes
	Type	Code	ø A	ø B	max.	min.	
4S	C	52	5.2	–	5.0	4.1	
	C	62	6.2	–	6.0	5.1	
	C	72	7.2	–	7.0	6.1	
	C	82	8.2	–	8.0	7.1	
	C	92	9.2	–	9.0	8.1	
	C	10	10.2	–	10.0	9.1	
	C	11	11.2	–	11.0	10.1	
	C	12	12.2	–	12.0	11.1	
	C	13	13.2	12.2	13.0	12.6	
	K	14	14.2	–	14.0	13.1	1)
	K	15	15.2	–	15.0	14.1	1)
	K	16	16.2	–	16.0	15.1	1)
	K	17	17.2	–	17.0	16.1	1)
	K	18	18.2	–	18.0	17.1	1)
	K	19	19.2	–	19.0	18.1	1)
	K	20	20.2	19.7	20.0	19.1	1)
	K	21	21.2	19.7	21.0	20.1	1)
	K	22	22.2	19.7	22.0	21.1	1)
	L	52	5.2	–	5.0	4.1	
	L	62	6.2	–	6.0	5.1	
	L	72	7.2	–	7.0	6.1	
	L	82	8.2	–	8.0	7.1	
	L	92	9.2	–	9.0	8.1	
	L	10	10.2	–	10.0	9.1	
	L	11	11.2	–	11.0	10.1	
	L	12	12.2	–	12.0	11.1	
	L	13	13.2	–	13.0	12.6	

Note:
1) these collets cannot be used for connectors models with nut for fitting a bend relief.
All dimensions are in millimetres.

C, K and L type collets for S series

C type

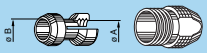

K type
oversize
cable collet

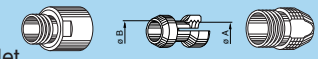

L type
(non EMC)

5S

Reference		Collet ø		Cable ø	
Type	Code	ø A	ø B	max.	min.
C	72	7.2	–	7.0	6.1
C	82	8.2	–	8.0	7.1
C	92	9.2	–	9.0	8.1
C	10	10.2	–	10.0	9.1
C	11	11.2	–	11.0	10.1
C	12	12.2	–	12.0	11.1
C	13	13.2	–	13.0	12.1
C	14	14.2	–	14.0	13.1
C	15	15.2	–	15.0	14.1
C	16	16.2	–	16.0	15.1
C	17	17.2	–	17.0	16.1
C	18	18.2	–	18.0	17.1
C	19	19.2	–	19.0	18.1
C	20	20.2	19.7	20.0	19.1
C	21	21.2	19.7	21.0	20.1
C	22	22.2	19.7	22.0	21.1
K	23	23.2	–	23.0	22.1
K	24	24.2	–	24.0	23.1
K	25	25.2	–	25.0	24.1
K	26	26.2	–	26.0	25.1
K	27	27.2	–	27.0	26.1
K	28	28.2	27.2	28.0	27.1
K	29	29.2	27.2	29.0	28.1
K	30	30.2	27.2	30.0	29.1
L	92	9.2	–	9.0	8.1
L	10	10.2	–	10.0	9.1
L	11	11.2	–	11.0	10.1
L	12	12.2	–	12.0	11.1
L	13	13.2	–	13.0	12.1
L	14	14.2	–	14.0	13.1
L	15	15.2	–	15.0	14.1
L	16	16.2	–	16.0	15.1
L	17	17.2	–	17.0	16.1
L	18	18.2	–	18.0	17.1
L	19	19.2	–	19.0	18.1
L	20	20.2	–	20.0	19.1
L	21	21.2	–	21.0	20.1

6S

Reference		Collet ø		Cable ø	
Type	Code	ø A	ø B	max.	min.
C	12	12.2	–	12.0	11.1
C	13	13.2	–	13.0	12.1
C	14	14.2	–	14.0	13.1
C	15	15.2	–	15.0	14.1
C	16	16.2	–	16.0	15.1
C	17	17.2	–	17.0	16.1
C	18	18.2	–	18.0	17.1
C	19	19.2	–	19.0	18.1
C	20	20.2	–	20.0	19.1
C	21	21.2	–	21.0	20.1
C	22	22.2	–	22.0	21.1
C	23	23.2	–	23.0	22.1
C	24	24.2	–	24.0	23.1
C	25	25.2	–	25.0	24.1
C	26	26.2	–	26.0	25.1
C	27	27.2	–	27.0	26.1
C	28	28.2	27.2	28.0	27.1
C	29	29.2	27.2	29.0	28.1
C	30	30.2	27.2	30.0	29.1
L	12	12.2	–	12.0	11.1
L	13	13.2	–	13.0	12.1
L	14	14.2	–	14.0	13.1
L	15	15.2	–	15.0	14.1
L	16	16.2	–	16.0	15.1
L	17	17.2	–	17.0	16.1
L	18	18.2	–	18.0	17.1
L	19	19.2	–	19.0	18.1
L	20	20.2	–	20.0	19.1
L	21	21.2	–	21.0	20.1
L	22	22.2	–	22.0	21.1
L	23	23.2	–	23.0	22.1
L	24	24.2	–	24.0	23.1
L	25	25.2	–	25.0	24.1
L	26	26.2	–	26.0	25.1
L	27	27.2	–	27.0	26.1
L	28	28.2	–	28.0	27.1
L	29	29.2	–	29.0	28.1
L	30	30.2	–	30.0	29.1

Note: the 5S.112 is only available with L type of collet
All dimensions are in millimetres.

C and K type collets for E series

C type

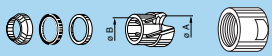

K type
oversize
cable collet

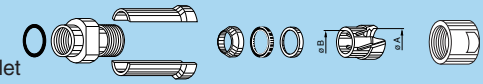

	Reference		Collet ø		Cable ø	
	Type	Code	ø A	ø B	max.	min.
0E	C	10	1.6	–	1.2	1.0
	C	15	1.6	–	1.5	1.3
	C	20	2.1	–	2.0	1.6
	C	25	3.1	–	2.5	2.1
	C	30	3.1	–	3.0	2.6
	C	35	4.2	4.2	3.5	3.1
	C	40	4.2	4.2	4.0	3.6
	C	45	5.2	5.2	4.5	4.1
	C	50	5.2	5.2	5.0	4.6
1E	C	15	1.6	–	1.5	1.3
	C	20	2.2	–	2.0	1.6
	C	25	3.2	–	2.5	2.1
	C	30	3.2	–	3.0	2.6
	C	35	4.2	–	3.5	3.1
	C	40	4.2	–	4.0	3.6
	C	45	5.2	–	4.5	4.1
	C	50	5.2	–	5.0	4.6
	C	55	6.2	6.2	5.5	5.1
	C	60	6.2	6.2	6.0	5.6
	C	65	7.2	6.7	6.5	6.1
	K	70	7.2	–	7.0	6.6
	K	75	8.2	8.2	7.5	7.1
	K	80	8.2	8.2	8.0	7.6
	K	85	9.2	8.6	8.5	8.1
2E	C	15	2.2	–	1.5	1.3
	C	20	2.2	–	2.0	1.6
	C	25	3.2	–	2.5	2.1
	C	30	3.2	–	3.0	2.6
	C	35	4.2	–	3.5	3.1
	C	40	4.2	–	4.0	3.6
	C	45	5.2	–	4.5	4.1
	C	50	5.2	–	5.0	4.6
	C	55	6.2	–	5.5	5.1
	C	60	6.2	–	6.0	5.6
	C	65	7.2	–	6.5	6.1
	C	70	7.2	–	7.0	6.6
	C	75	8.2	8.2	7.5	7.1
	C	80	8.2	8.2	8.0	7.6
	C	85	9.2	8.6	8.5	8.1
	K	90	9.2	–	9.0	8.6
	K	95	10.2	10.2	9.5	9.1
	K	10	10.2	10.2	10.0	9.6
	K	11	11.2	10.6	10.5	10.1

	Reference		Collet ø		Cable ø	
	Type	Code	ø A	ø B	max.	min.
3E	C	30	3.2	–	3.0	2.6
	C	35	4.2	–	3.5	3.1
	C	40	4.2	–	4.0	3.6
	C	45	5.2	–	4.5	4.1
	C	50	5.2	–	5.0	4.6
	C	55	6.2	–	5.5	5.1
	C	60	6.2	–	6.0	5.6
	C	65	7.2	–	6.5	6.1
	C	70	7.2	–	7.0	6.6
	C	75	8.2	–	7.5	7.1
	C	80	8.2	–	8.0	7.6
	C	85	9.2	–	8.5	8.1
	C	90	9.2	–	9.0	8.6
	C	95	10.2	10.2	9.5	9.1
	C	10	10.2	10.2	10.0	9.6
	C	11[1)]	11.2	10.6	10.5	10.1
	K	11	12.3	–	12.0	10.6
	K	12	13.8	13.8	12.8	12.1
	K	13	13.8	13.8	13.5	12.9
	K	14	15.3	15.3	14.0	13.6
	K	15	15.3	15.3	15.0	14.1
4E	C	50	6.3	–	5.0	4.8
	C	55	6.3	–	5.5	5.1
	C	60	6.3	–	6.0	5.6
	C	65	7.3	–	6.5	6.1
	C	70	7.3	–	7.0	6.6
	C	75	8.3	–	7.5	7.1
	C	80	8.3	–	8.0	7.6
	C	85	9.3	–	8.5	8.1
	C	90	9.3	–	9.0	8.6
	C	95	10.8	–	9.5	9.1
	C	10	10.8	–	10.5	9.6
	C	11	12.3	–	12.0	10.6
	C	12	13.8	13.8	12.8	12.1
	C	13	13.8	13.8	13.5	12.9
	C	14	15.3	15.3	14.0	13.6
	C	15	15.3	15.3	15.0	14.1
	K	16	17.8	–	16.5	15.6
	K	17	17.8	–	17.5	16.6
	K	18	19.8	–	18.5	17.6
	K	19	19.8	–	19.5	18.6
	K	20	21.8	–	20.5	19.6
	K	21	21.8	–	21.5	20.6
	K	22	23.8	23.8	22.5	21.6
	K	23	23.8	23.8	23.5	22.6

Note:
[1)] these collets cannot be used for connectors models with nut for fitting a bend relief.
All dimensions are in millimetres.

C and K type collets for E series

C type

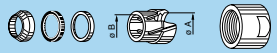

K type
oversize
cable collet

5E

Reference		Collet ø		Cable ø	
Type	Code	ø A	ø B	max.	min.
C	10	11.8	–	10.5	9.6
C	11	11.8	–	11.5	10.6
C	12	13.8	–	12.5	11.6
C	13	13.8	–	13.5	12.6
C	14	15.8	–	14.5	13.6
C	15	15.8	–	15.5	14.6
C	16	17.8	–	16.5	15.6
C	17	17.8	–	17.5	16.6
C	18	19.8	–	18.5	17.6
C	19	19.8	–	19.5	18.6
C	20	21.8	–	20.5	19.6
C	21	21.8	–	21.5	20.6
C	22	23.8	23.8	22.5	21.6
C	23	23.8	23.8	23.5	22.6

6E

Reference		Collet ø		Cable ø	
Type	Code	ø A	ø B	max.	min.
C	14	14.2	–	14.0	13.0
C	15	15.2	–	15.0	14.1
C	16	15.7	–	15.5	14.6
C	17	16.7	–	16.5	15.6
C	18	18.2	–	18.0	17.1
C	21	23.2	–	21.5	20.6
C	22	23.2	–	22.0	21.1
C	23	23.2	–	23.0	22.1
C	27	27.2	–	27.0	26.1
L	30	30.2	–	30.0	29.5

Note: all dimensions are in millimetres.

C and K type collets for L series

C type

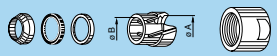

K type
oversize
cable collet

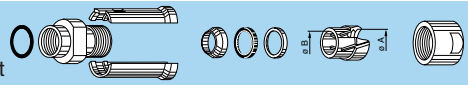

0L

Reference		Collet ø		Cable ø	
Type	Code	ø A	ø B	max.	min.
C	10	1.6	–	1.2	1.0
C	15	1.6	–	1.5	1.3
C	20	2.1	–	2.0	1.6
C	25	3.1	–	2.5	2.1
C	30	3.1	–	3.0	2.6
C	35	4.2	4.2	3.5	3.1
C	40	4.2	4.2	4.0	3.6
C	45	5.2	5.2	4.5	4.1
C	50	5.2	5.2	5.0	4.6

1L

Reference		Collet ø		Cable ø	
Type	Code	ø A	ø B	max.	min.
C	15	1.6	–	1.5	1.3
C	20	2.2	–	2.0	1.6
C	25	3.2	–	2.5	2.1
C	30	3.2	–	3.0	2.6
C	35	4.2	–	3.5	3.1
C	40	4.2	–	4.0	3.6
C	45	5.2	–	4.5	4.1
C	50	5.2	–	5.0	4.6
C	55	6.2	6.2	5.5	5.1
C	60	6.2	6.2	6.0	5.6
C	65	7.2	6.7	6.5	6.1
K	70	7.2	–	7.0	6.6
K	75	8.2	8.2	7.5	7.1
K	80	8.2	8.2	8.0	7.6
K	85	9.2	8.6	8.5	8.1

2L

Reference		Collet ø		Cable ø	
Type	Code	ø A	ø B	max.	min.
C	15	2.2	–	1.5	1.3
C	20	2.2	–	2.0	1.6
C	25	3.2	–	2.5	2.1
C	30	3.2	–	3.0	2.6
C	35	4.2	–	3.5	3.1
C	40	4.2	–	4.0	3.6
C	45	5.2	–	4.5	4.1
C	50	5.2	–	5.0	4.6
C	55	6.2	–	5.5	5.1
C	60	6.2	–	6.0	5.6
C	65	7.2	–	6.5	6.1
C	70	7.2	–	7.0	6.6
C	75	8.2	8.2	7.5	7.1
C	80	8.2	8.2	8.0	7.6
C	85	9.2	8.6	8.5	8.1
K	90	9.2	–	9.0	8.6
K	95	10.2	10.2	9.5	9.1
K	10	10.2	10.2	10.0	9.6
K	11	11.2	10.6	10.5	10.1

Note: all dimensions are in millimetres.

Variant (S, E and L series)

Bend relief for S series models with collet

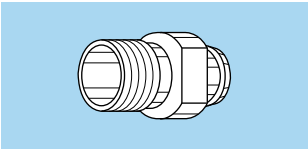

Need to be ordered

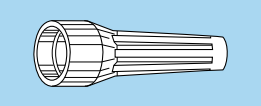

	Ref.	Collet		Need to be ordered separately (see pages 141 and 142)
		Type	Code	
00	Z	C	17 to 31	GMA.00.0●●.D●
		K	37 to 42	GMA.0B.0●●.D●
		L	27 to 31	GMA.00.0●●.D●
0S	Z	C	32 to 44	GMA.0B.0●●.D●
		K	52 to 62	GMA.1B.0●●.D●
		L	32 to 48	GMA.0B.0●●.D●
1S	Z	C	32 to 62	GMA.1B.0●●.D●
		K	72 to 87	GMA.2B.0●●.D●
		L	32 to 66	GMA.1B.0●●.D●
2S	Z	C	42 to 87	GMA.2B.0●●.D●
		K	97 to 11	GMA.3B.0●●.D●
		L	42 to 87	GMA.2B.0●●.D●
3S	Z	C	57 to 97	GMA.3B.0●●.D●
		K	12 to 13	GMA.4B.0●●.D●
		L	57 to 97	GMA.3B.0●●.D●
4S	Z	C	82 to 13	GMA.4B.0●●.D●
		L	82 to 13	GMA.4B.0●●.D●

Bend relief for E and L series models with collet

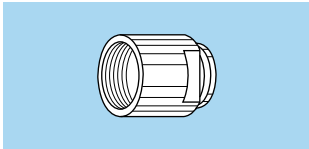

Need to be ordered

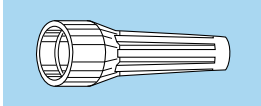

	Ref.	Collet		Need to be ordered separately (see pages 141 and 142)
		Type	Code	
0E 0L	Z	C	10 to 50	GMA.0B.●●●.●●
1E 1L	Z	C	15 to 65	GMA.1B.●●●.●●
		K	70 to 85	GMA.2B.●●●.●●
2E 2L	Z	C	15 to 85	GMA.2B.●●●.●●
		K	90 to 10	GMA.3B.●●●.●●
3E	Z	C	30 to 10	GMA.3B.●●●.●●
		K	11 to 15	GMA.4B.●●●.●●
4E	Z	C	50 to 15	GMA.4B.●●●.●●

Note: All dimensions are in millimetres.

Colour of connectors shell made of plastic material and aluminium alloys

Reference	Colour	Plastic shell			Aluminium alloys	
		PSU	PPSU	PA.6	Anodized colour	Anodized colour for bend relief collet nut
A	blue			●	●	
B	white	●		●		
G	grey	●		●		
J	yellow			●	●	
M	brown			●		
N	black			●	●	
R	red			●	●	
S	orange			●		
T	natural				●	
V	green			●	●	
L	black					●
X	natural					●
F	cream		●			

Note: other anodizing colours are available for connectors with collet nut for bend relief. Please consult us.

Watertight and vacumtight socket and coupler models (S, E and L series)

	Model	Reference	
		Watertight	Vacuumtight
S	EWB, HCP, HGP, HGW, SWH	P	PV
E	EBR, HGP, SWH	P	PV
L	HGG	P	PV

O-ring and gasket material (E and L series)

Standard connectors are delivered with silicone o-ring and gaskets. The vacuumtight models, identified with the letter «PV», are delivered with Viton® gaskets. Other gaskets material can be delivered upon special request.

O-ring material	Reference
FPM (Viton®)	H
EPDM	E
FPM (Viton®) and collet nut for bend relief	D

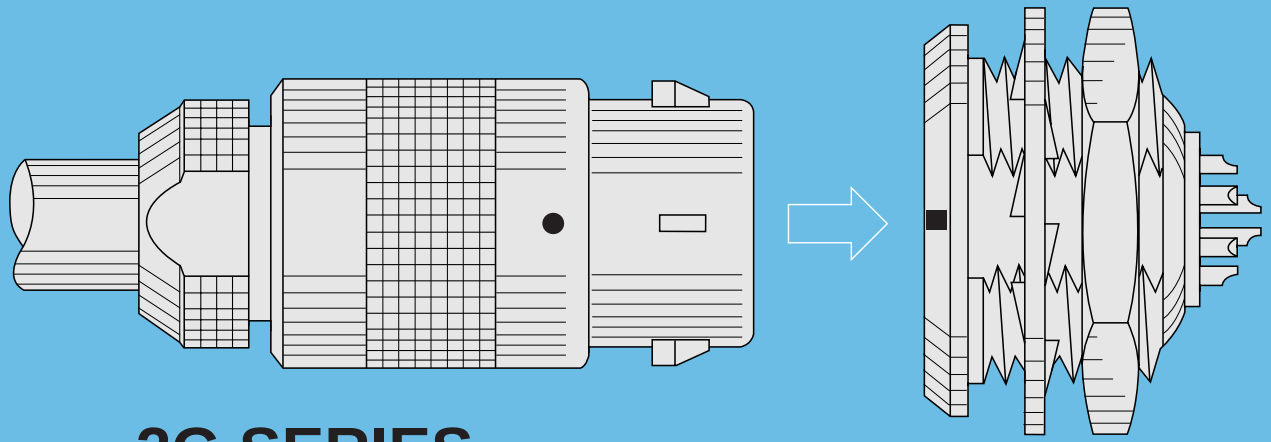

2G SERIES

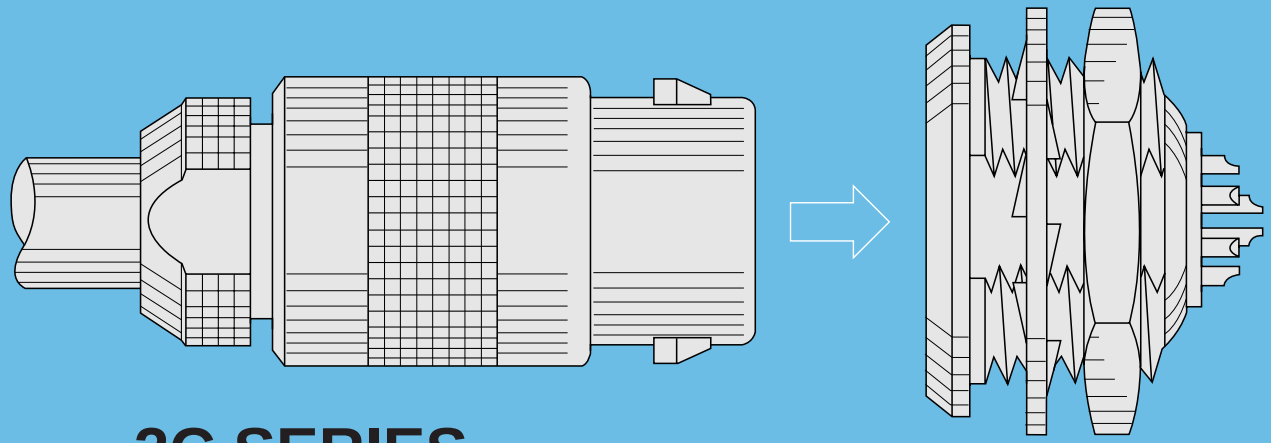

2C SERIES

2G Series

The 2G series with key (G) provides the same advantages of space saving due to its small dimensions as the 2C series and is available in multipole type with 18 contacts.

Metal housing models (page 111)

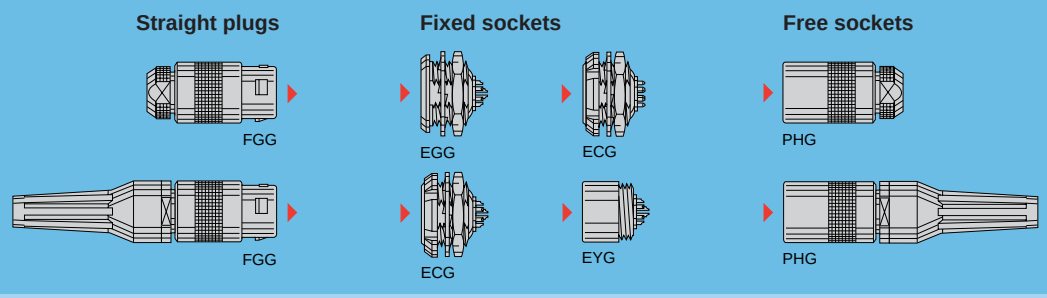

Part Numbering System

Plug FGG . 2G . 318 . C L A D 52

- Variant: (page 113)
- Cable ø: (page 113)
- Collet type: (page 113)

Fixed socket EGG . 2G . 318 . C L L

- Variant: (page 113)
- Contact: (page 113)
- Insulator: L = PEEK
- Housing: (page 112)
- Model: (page 111)
- Series: 2G
- Insert configuration: (page 112)

Part Number Example

Straight plug with cable collet:
FGG.2G.318.CLAD52 = straight plug with cable collet, 2G series, multipole type with 18 contacts, outer shell in chrome-plated brass, PEEK insulator, male solder contacts, D type collet for 5.2 mm diameter cable.

Fixed socket:
EGG.2G.318.CLL = fixed socket, 2G series, multipole type with 18 contacts, outer shell in chrome-plated brass, PEEK insulator, female solder contacts.

Part Section Showing Internal Components

Fixed socket

1. outer shell
2. hexagonal nut
3. locking washer
4. insulator
5. female contact

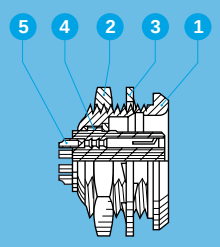

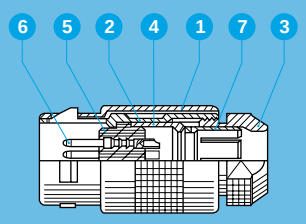

Straight plug

1. outer shell
2. latch sleeve
3. collet nut
4. split centre-piece
5. insulator
6. male contact
7. collet

Metal housing models

Technical Characteristics

Mechanical and Climatical

Characteristics	Value	Standard
Endurance	> 500 cycles	IEC 60512-5 test 9a
Humidity	up to 95% at 60° C	
Temperature range	- 55° C + 250° C	
Salt spray corrosion test	> 144 h	IEC 60512-6 test 11f
Protection index	IP50	IEC 60529
Climatical category	55/175/21	IEC 60068-1

Note:
The various tests have been carried out with FGG and EGG connector pairs, with chrome-plated brass shell and PEEK insulator.
Detailed electrical characteristics, as well as materials and treatment are presented in the chapter Technical Characteristics on page 171.

FGG.2G Straight plug, key (G), cable collet

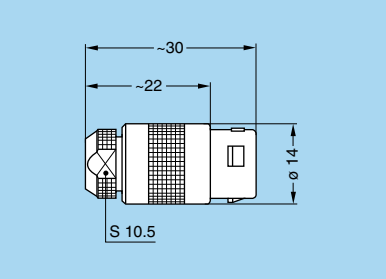

Cable assembly (page 115)

FGG.2G Straight plug, key (G), cable collet and nut for fitting a bend relief [1)]

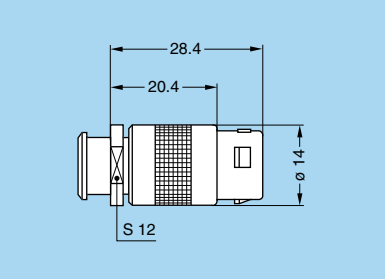

Cable assembly (page 115)

Note: [1)] to order, add a «Z» at the end of the reference.
The bend relief must be ordered separately (see page 141).

EGG.2G Fixed socket, nut fixing, key (G)

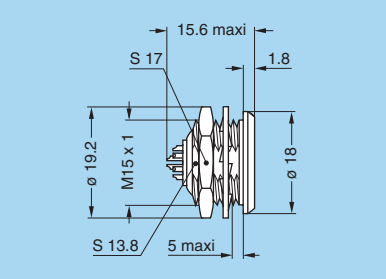

Panel cut-out (page 115)

ECG.2G Fixed socket with two nuts, key (G) (back panel mounting)

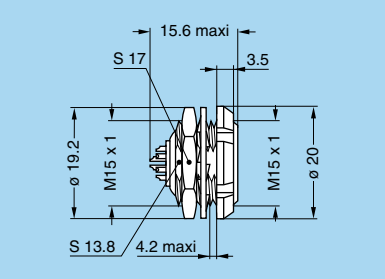

Panel cut-out (page 115)

ECG.2G Fixed socket with two nuts, key (G), straight contact for printed circuit (back panel mounting)

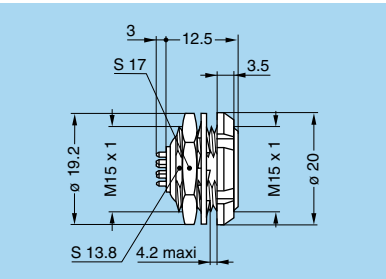

Panel cut-out (page 115)

PCB drilling pattern (page 115)

EYG.2G Fixed socket, key (G), protruding shell (screw fixing on the panel)

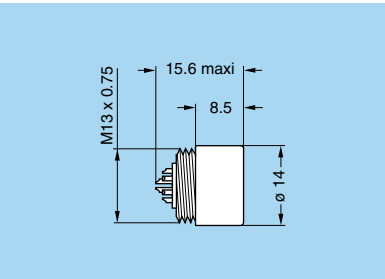

Panel cut-out (page 115)

Note: all dimensions are in millimetres.

PHG.2G Free socket, key (G), cable collet

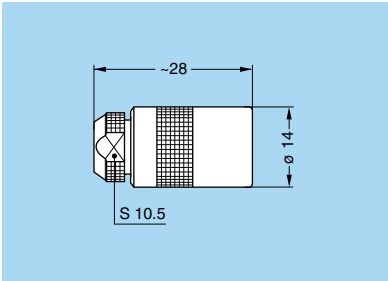

Cable assembly (page 115)

PHG.2G Free socket, key (G), cable collet and nut for fitting a bend relief [1)]

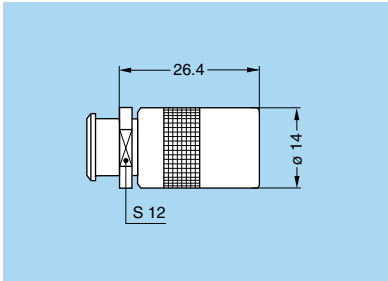

Cable assembly (page 115)

Note: [1)] to order, add a «Z» at the end of the reference.
The bend relief must be ordered separately (see page 141).

Insert configuration (2G series)

	Male solder contacts	Female solder contacts	Reference	Number of contacts	ø A (mm)	Contact type: Solder	Contact type: Print	Test voltage (kV rms) [2)]	Test voltage (kV dc) [2)]	Rated current (A) [1)]
2G	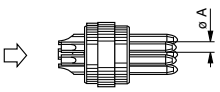	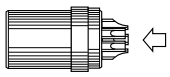	318	18	0.7	●	●	0.85	1.2	5.5

Note: [1)] see calculation method, caution and suggested standard on page 178.
[2)] lowest measured value; contact to contact or contact to shell.

Housings (2G series)

Ref.	Outer shell and collet nut		Latch sleeve		Other metallic components		Note
	Material	Surf. treatment	Material	Surf. treatment	Material	Surf. treatment	
C	Brass	chrome	brass/bronze	nickel	brass	nickel	●
N	Brass	nickel	brass/bronze	nickel	brass	nickel	○
K	Brass	black chrome	brass/bronze	nickel	brass	nickel	●

● First choice alternative
○ Special order alternative

Note: detailed characteristics of these materials and treatments are presented on page 171.

Contacts (2G series)

Ref.	Contact type
A	Male solder
L	Female solder
N	Female print

Collets (2G series)

D type collets for 2G series

D type

	Reference		Collet ø		Cable ø	
	Type	Code	ø A	ø B	max.	min.
2G	D	52	5.2	–	5.1	4.5
	D	62	6.2	–	6.1	5.5
	D	72	7.2	6.2	7.1	6.5
	D	80	8.0	6.2	7.9	7.5

Note: all dimensions are in millimetres.

Variant (2G series)

Bend relief for 2G series models with collet

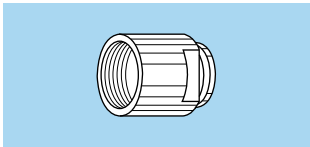

Need to be ordered

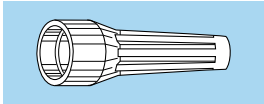

	Ref.	Collet		Need to be ordered separately (see pages 141 and 142)
		Type	Code	
2G	Z	D	52 to 80	GMA.2B.●●●.●●

Accessories (2G series)

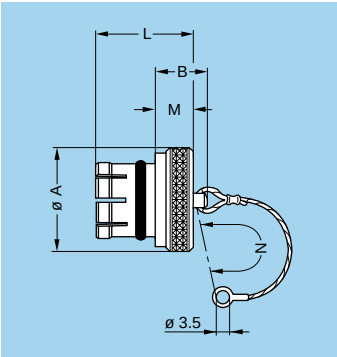

BRE Blanking caps for fixed and free sockets

Part number	Dimensions (mm)				
	A	B	L	M	N
BRE.2G.200.NAS	18	12	10.6	6.0	85

Note: these caps are suitable for use with any alignment key configuration. The last letter «S» of the part number stands for the material of the O ring (silicone rubber). O-ring's made from FPM are also available; if required, replace the letter «S» by «V».

- Body material: Nickel-plated brass (Ni 3 µm)
- Lanyard material: Stainless steel
- O-ring material: Silicone rubber or FPM

- Maximum operating temperature: 200°C
- Watertightness: IP61 according to IEC 60529

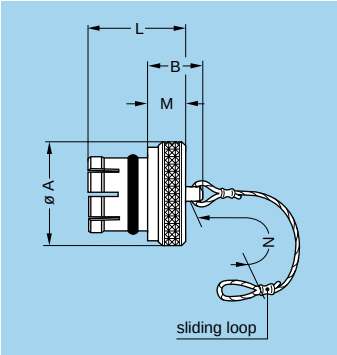

BRF Blanking caps for fixed sockets

Part number	Dimensions (mm)				
	A	B	L	M	N
BRF.2G.200.NAS	18	12	14.0	6.0	85

Note: this caps are suitable for use with any alignment key configuration. The last letter «S» of the part number stands for the material of the O ring (silicone rubber). O-ring's made from FPM are also available; if required, replace the letter «S» by «V».

- Body material: Nickel-plated brass (Ni 3 µm)
- Lanyard material: Stainless steel
- O-ring material: Silicone rubber or FPM

- Maximum operating temperature: 200°C
- Watertightness: IP61 according to IEC 60529

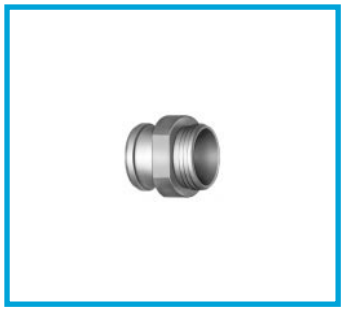

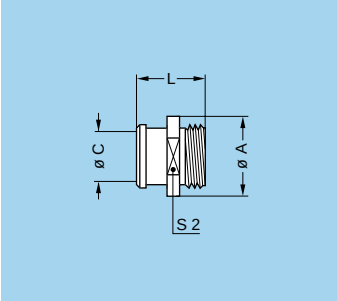

FFM Nut for bend relief

Part number	Dimensions (mm)			
	A	C	L	S2
FFM.2C.130.LC	14	8	12.2	12

Note: for bend reliefs to be used with this nut see section «Accessories» page 141.

- Material: Chrome-plated brass (0.3 µm)

Note: other accessories are also available. See section «Accessories» on page 135.

Tooling (2G series)

Please consult the «Tooling» section (page 146).

Panel cut-outs (2G series)

Panel cut-outs

EGG - ECG

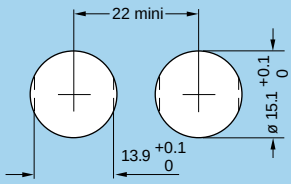

EYG

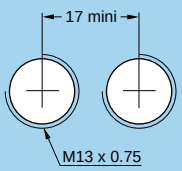

PCB drilling pattern

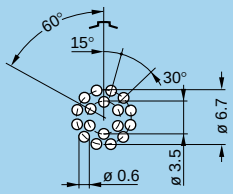

Note: mounting nut torque: 6 Nm (1N = 0.102 kg)

Cable assembly (2G series)

Cable stripping lengths (2G series)

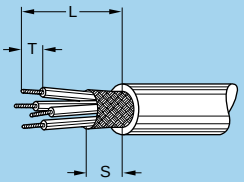

Connector		ø contact A (mm)	Cable stripping lengths (mm)		
Series	Type		L	S	T
2G	318	0.7	9	7	3

Note: the tolerances on these dimensions are: L: ± 0.5 mm; S: ± 0.5 mm; T: ± 0.2 mm.

2C Series

In many applications, it is necessary to use multipole connectors which have shortened dimensions but require high contact density. LEMO short series connectors, which are shorter than 30 mm, perfectly meet these needs.
The 2C series, featuring a hermaphroditic insert, is available in multipole type up to 14 contacts.

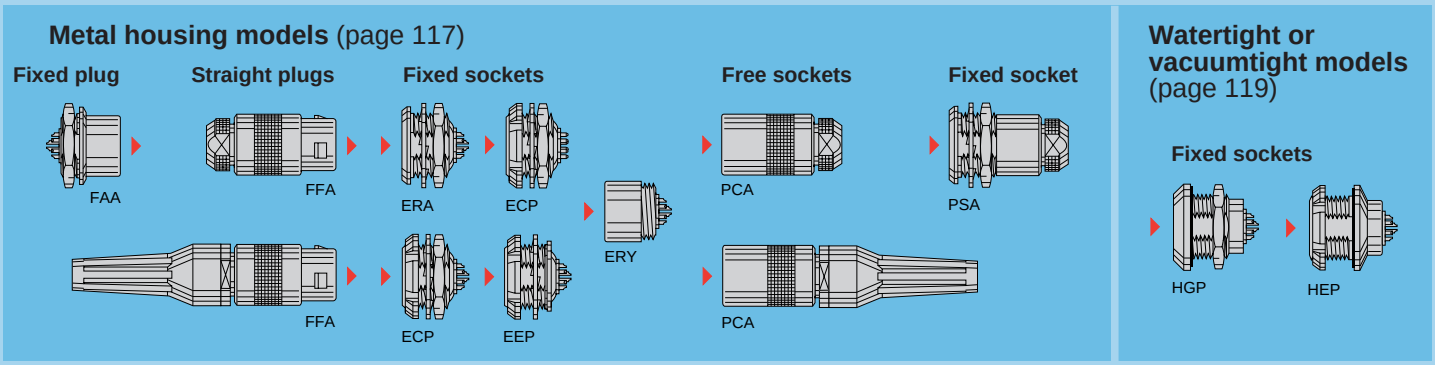

Part Numbering System

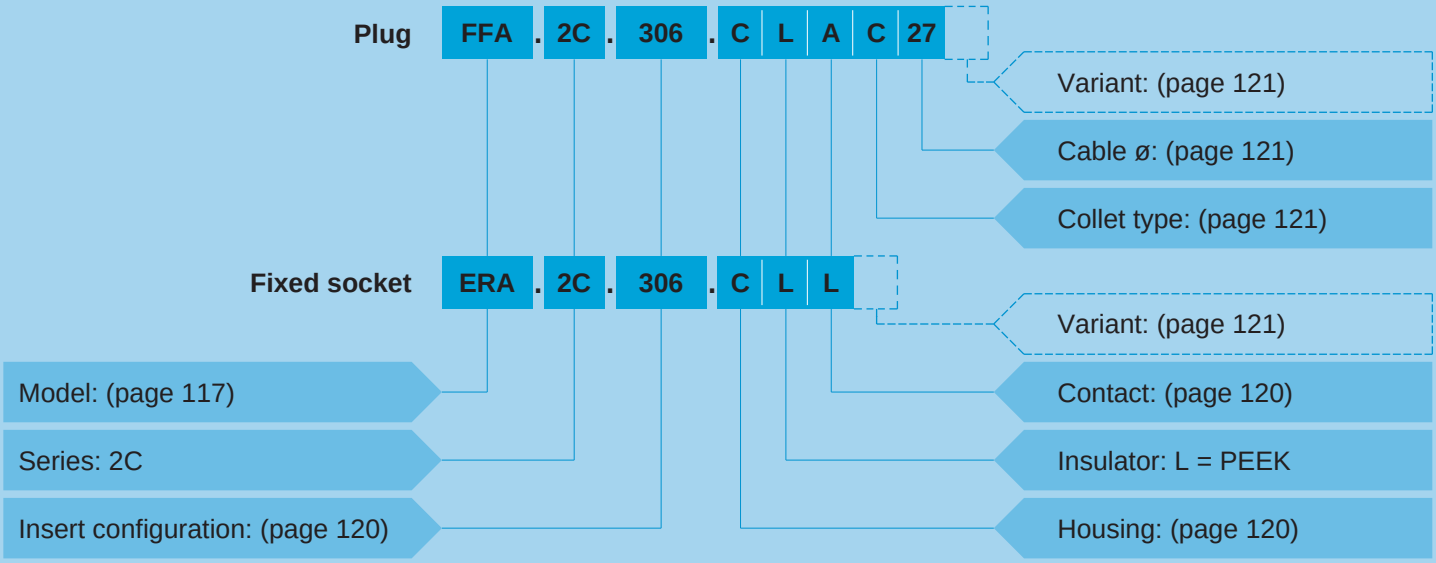

Part Number Example

Straight plug with cable collet:
FFA.2C.306.CLAC27 = straight plug with cable collet, 2C series, multipole type with 6 contacts, outer shell in chrome-plated brass, PEEK insulator, male solder contacts, C type collet for 2.7 mm diameter cable.

Fixed socket:
ERA.2C.306.CLL = fixed socket, nut fixing, 2C series, multipole type with 6 contacts, outer shell in chrome-plated brass, PEEK insulator, female solder contacts.

Part Section Showing Internal Components

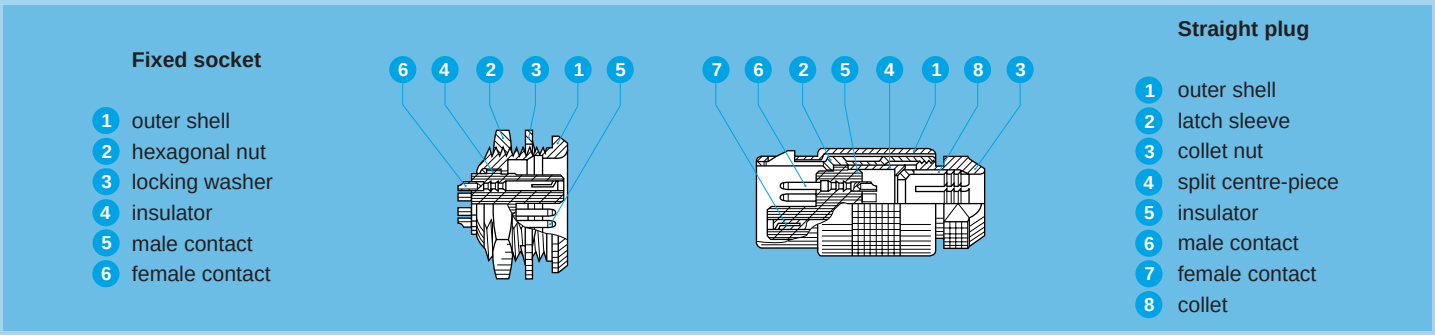

Metal housing models

Technical Characteristics

Mechanical and Climatical

Characteristics	Value	Standard
Endurance	> 500 cycles	IEC 60512-5 test 9a
Humidity	up to 95% at 60° C	
Temperature range	- 55° C + 250° C	
Salt spray corrosion test	> 144 h	IEC 60512-6 test 11f
Protection index	IP50	IEC 60529
Climatical category	55/175/21	IEC 60068-1

Note:
The various tests have been carried out with FFA and ERA connector pairs, with chrome-plated brass shell and PEEK insulator.
Detailed electrical characteristics, as well as materials and treatment are presented in the chapter Technical Characteristics on page 171.

FFA.2C Straight plug, cable collet

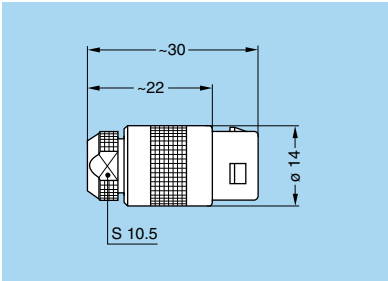

Cable assembly (page 122)

FFA.2C Straight plug, cable collet and nut for fitting a bend relief [1)]

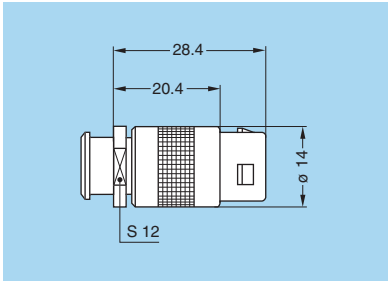

Cable assembly (page 122)

Note: [1)] to order, add a «Z» at the end of the reference.
The bend relief must be ordered separately (see page 141).

FAA.2C Fixed plug, nut fixing, non-latching

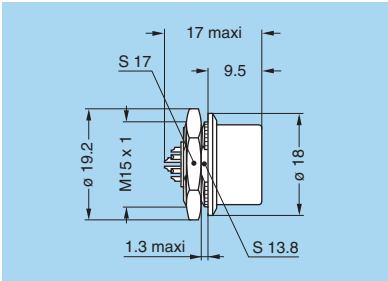

Panel cut-out (page 122)

ERA.2C Fixed socket, nut fixing

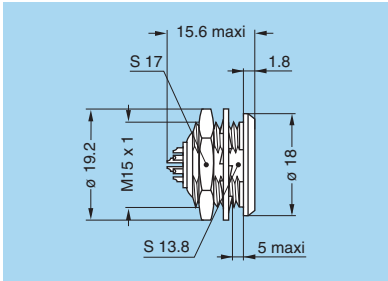

Panel cut-out (page 122)

ECP.2C Fixed socket with two nuts (back panel mounting)

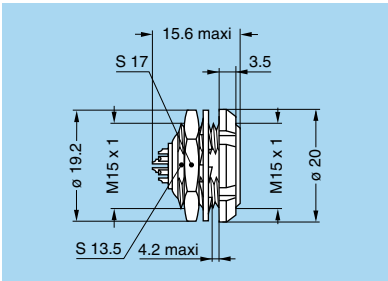

Panel cut-out (page 122)

Note: all dimensions are in millimetres.

ECP.2C Fixed socket with two nuts, straight contact for printed circuit (back panel mounting)

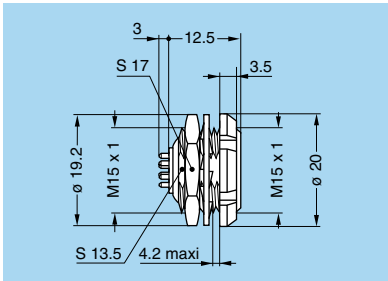

Panel cut-out (page 122)

PCB drilling pattern (page 122)

EEP.2C Fixed socket, nut fixing (back panel mounting)

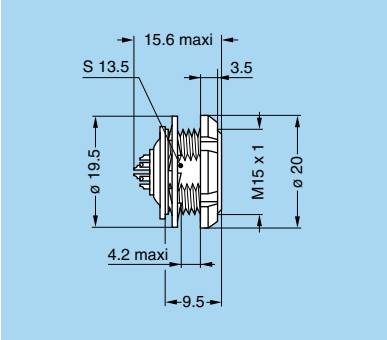

Panel cut-out (page 122)

ERY.2C Fixed socket, protruding shell, (screw fixing on the panel)

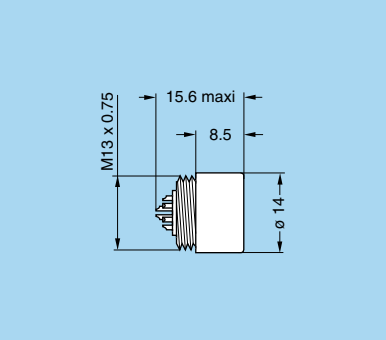

Panel cut-out (page 122)

PCA.2C Free socket, cable collet

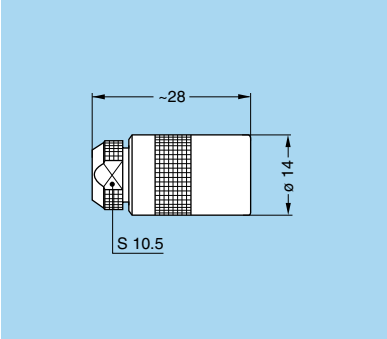

Cable assembly (page 122)

PCA.2C Free socket, cable collet and nut for fitting a bend relief [1)]

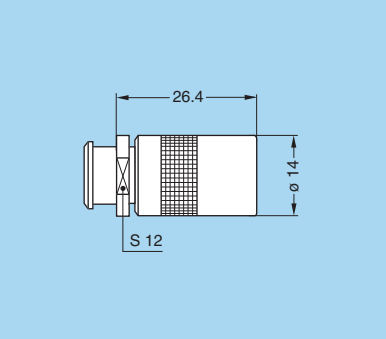

Cable assembly (page 122)

Note: [1)] to order, add a «Z» at the end of the reference.
The bend relief must be ordered separately (see page 141).

PSA.2C Fixed socket nut fixing, cable collet

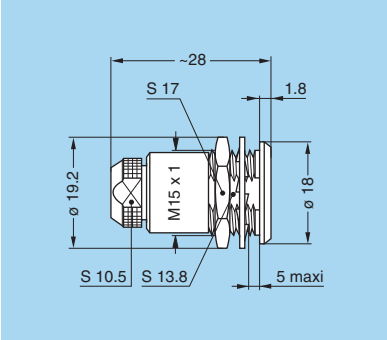

Panel cut-out (page 122)

Note: all dimensions are in millimetres.

Watertight or vacuumtight models

These socket allow the device on which they are fitted to reach a protection index of IP68 as per IEC 60529. They are fully compatible with plugs of the same series and are widely used for portable radios, military, laboratory equipment, aviation, etc.
These models are identified by a letter «P» at the end of the reference.
These models are also available in a vacuumtight version. Such models are identified by an additional letter «V» at the end of the part number (certificate on request).
Epoxy resin is used to seal these models.

Technical Characteristics

Mechanical and Climatical

Characteristics	Value	Standard
Endurance	> 500 cycles	IEC 60512-5 test 9a
Humidity	up to 95% at 60° C	
Temperature range	- 20° C, +80° C	
Salt spray corrosion test	> 144h	IEC 60512-6 test 11f

Characteristics	Value	Standard
Climatical category	20/80/21	IEC 60068-1
Leakage rate (He)[1)]	< 10^{-7} mbar.l.s^{-1}	IEC 60512-7 test 14b
Maximum operating pressure	5 bars	IEC 60512-7 test 14d

Note: [1)] only for vacuumtight models.

HGP.2C Fixed socket, nut fixing, watertight or vacuumtight

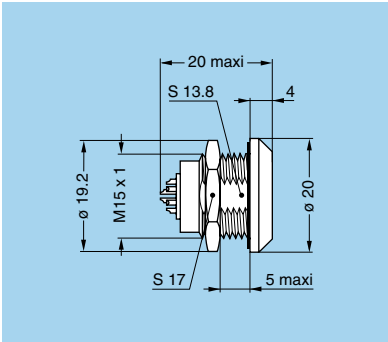

Panel cut-out (page 122)

HEP.2C Fixed socket, nut fixing, watertight or vacuumtight (back panel mounting)

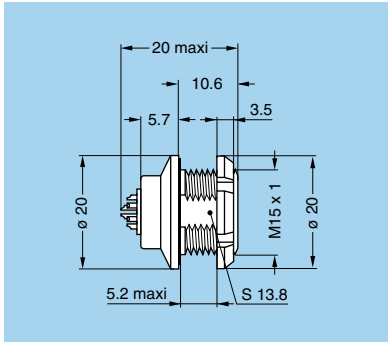

Panel cut-out (page 122)

Insert configuration (2C series)

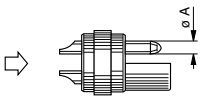

Male solder contacts

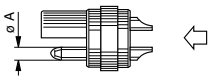

Female solder contacts

2C

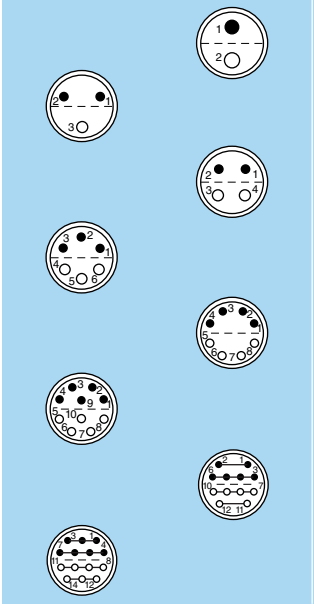

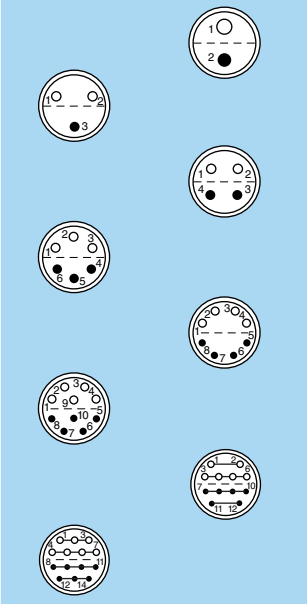

Reference	Number of contacts	ø A (mm)	Contact type: Solder	Contact type: Print	Test voltage (kV rms)[1) 2)]	Test voltage (kV dc)[1) 2)]	Rated current (A)[1)]
302	2	1.6	●	–	1.80	2.40	20
303	3	1.3	●	–	1.50	2.10	15
304	4	1.3	●	–	1.80	2.40	15
306	6	1.3	●	–	1.50	2.10	12
308	8	0.7	●	●	0.95	1.35	7
310	10	0.7	●	●	0.95	1.35	7
312	12	0.7	●	●	0.60	0.90	5
314	14	0.7	●	●	0.60	0.90	5

Note: 1) see calculation method, caution and suggested standard on page 178.
2) lowest measured value; contact to contact or contact to shell.

Housings (2C series)

Ref.	Outer shell and collet nut: Material	Outer shell and collet nut: Surf. treatment	Latch sleeve: Material	Latch sleeve: Surf. treatment	Other metallic components: Material	Other metallic components: Surf. treatment	Note
C	Brass	chrome	brass/bronze	nickel	brass	nickel	●
N	Brass	nickel	brass/bronze	nickel	brass	nickel	○
K	Brass	black chrome	brass/bronze	nickel	brass	nickel	●

● First choice alternative
○ Special order alternative

Note: detailed characteristics of these materials and treatments are presented on page 171.

Contacts (2C series)

Ref.	Contact type
A	Male solder
L	Female solder
N	Female print

Multipole connectors are fitted with hermaphroditic inserts including male and female contacts. However, by convention, the letter indicating the contact type in the part number composition will be the male contact (reference A) for plugs and female contact (reference L) for sockets.

Collets (2C series)

C and L type collets for 2C series

C type

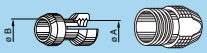

	Reference		Collet ø		Cable ø	
	Type	Code	ø A	ø B	max.	min.
2C	C	27	2.7	–	2.6	2.2
	C	32	3.2	–	3.1	2.7
	C	37	3.7	–	3.6	3.2
	C	42	4.2	–	4.1	3.7
	C	47	4.7	–	4.6	4.2
	C	52	5.2	–	5.1	4.7
	C	57	5.7	–	5.6	5.2
	C	62	6.2	–	6.1	5.7
	C	67	6.7	6.2	6.6	6.2
	C	72	7.2	6.2	7.1	6.7
	C	75	7.5	6.2	7.4	7.2
	C	80	8.0	6.2	7.9	7.5

Note: all dimensions are in millimetres.

L type
(non EMC)

	Reference		Collet ø		Cable ø	
	Type	Code	ø A	ø B	max.	min.
2C	L	14	1.4	–	1.3	0.8
	L	27	2.7	–	2.6	2.2
	L	32	3.2	–	3.1	2.7
	L	37	3.7	–	3.6	3.2
	L	42	4.2	–	4.1	3.7
	L	47	4.7	–	4.6	4.2
	L	52	5.2	–	5.1	4.7
	L	57	5.7	–	5.6	5.2
	L	62	6.2	–	6.1	5.7
	L	67	6.7	–	6.6	6.2
	L	72	7.2	–	7.1	6.7
	L	77	7.7	–	7.6	7.2
	L	82	8.2	–	8.1	7.7

Variant (2C series)

Bend relief for 2C series models with collet

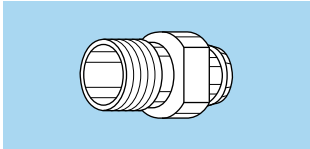

Need to be ordered

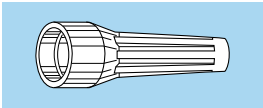

	Ref.	Collet		Need to be ordered separately (see pages 141 and 142)
		Type	Code	
2C	Z	C	42 to 80	GMA.2B.0●●.D●
		L	42 to 82	GMA.2B.0●●.D●

Watertight and vacumtight socket models (2C series)

	Model	Reference	
		Watertight	Vacuumtight
2C	HEP	P	PV
	HGP		

Accessories (2C series)

Accessories for the 2C series are identical with the 2G series. Please refer to corresponding pages (page 114).

Tooling (2C series)

Please consult the «Tooling» section (page 146).

Panel cut-outs (2C series)

Panel cut-outs

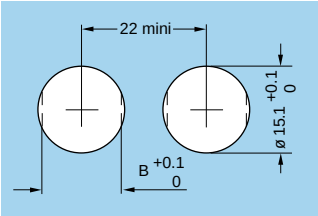

Model	B (mm)	Model	B (mm)
ECP	13.6	HGP	13.9
EEP	13.6	PSA	13.9
ERA	13.9		
FAA	13.9		
HEP	13.9		

ERY

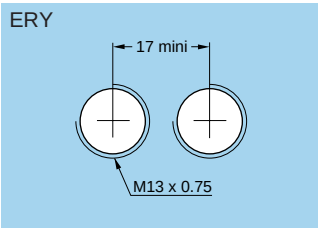

Note:
mounting nut torque:
6 Nm (1N = 0.102 kg)

PCB drilling patterns

308

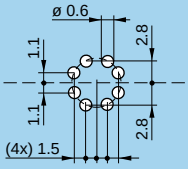

310

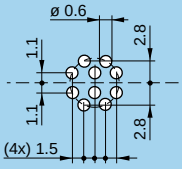

312

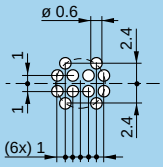

314

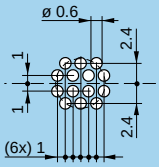

Cable assembly (2C series)

Cable stripping lengths (2C series)

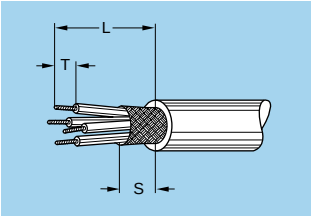

Connector		ø contact A (mm)	Cable stripping lengths (mm)		
Series	Type		L	S	T
2C	302	1.6	11	8	3
	303/304/306	1.3	11	8	3
	308/310/312/314	0.7	11	8	3

Note: the tolerances on these dimensions are: L: ± 0.5 mm; S: ± 0.5 mm; T: ± 0.2 mm.

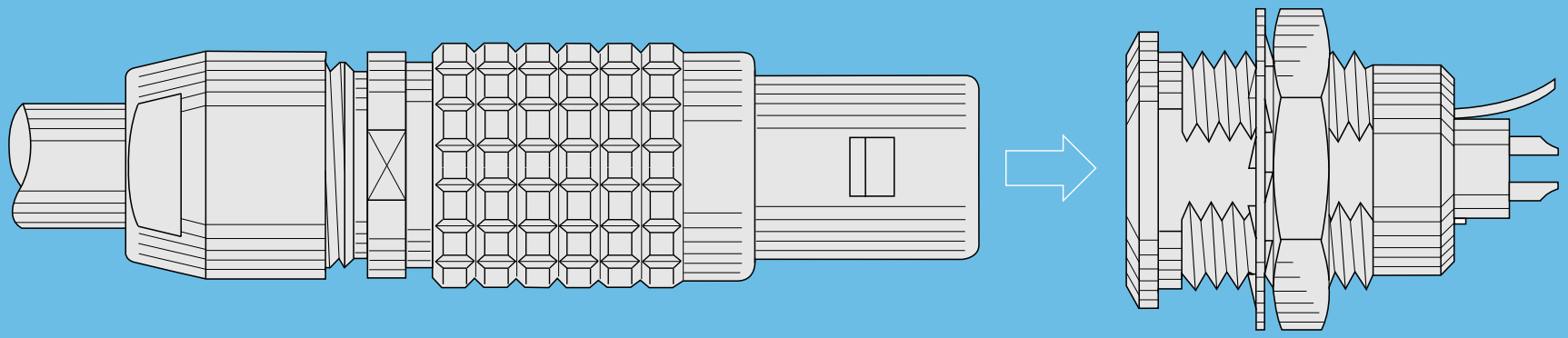

1D SERIES (quadrax)

1D Series

1D series QUADRAX connectors have four concentric contacts insulated from the connector shell.
Specially developed for major radio and television channels, this new connector type provides the possibility of blind mating with the full security of the LEMO Push-Pull self-latching system.

Metal housing models (page 125)

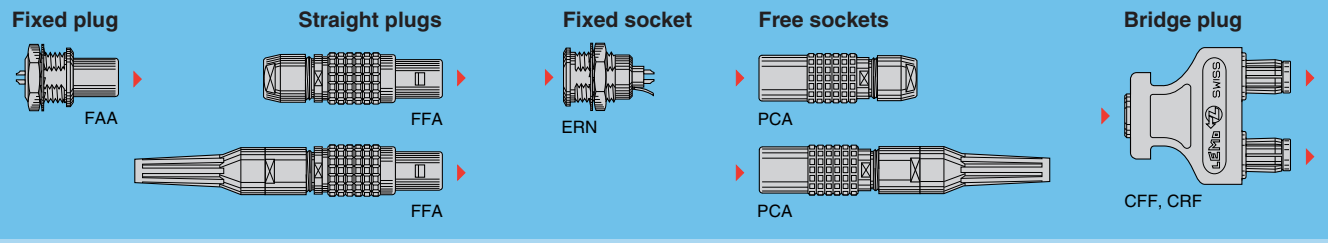

Part Numbering System

Plug FFA . 1D . 694 . C N L D 42

- Variant: (page 128)
- Cable ø: (page 127)
- Collet type: (page 127)

Fixed socket ERN . 1D . 694 . C N A

- Variant: (page 128)
- Contact: (page 127)
- Insulator: N = PA6.6
- Housing: (page 127)
- Model: (page 125)
- Series: 1D
- Insert configuration: (page 127) 694 = quadrax

Part Number Example

Straight plug with cable collet:
FFA.1D.694.CNLD42 = straight plug with cable collet, 1D series, quadrax type, outer shell in chrome-plated brass, PA6.6 insulator, female solder contacts, D type collet for 4.2 mm diameter cable.

Fixed socket:
ERN.1D.694.CNA = fixed socket, 1D series, quadrax type, outer shell in chrome-plated brass, PA6.6 insulator, male solder contacts.

Part Section Showing Internal Components

Fixed socket

1. outer shell
2. earthing crown
3. retaining ring
4. hexagonal nut
5. locking washer
6. insulator
7. printed circuit
8. male contact
9. male intermediate contact
10. female intermediate contact

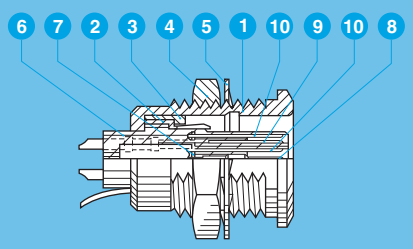

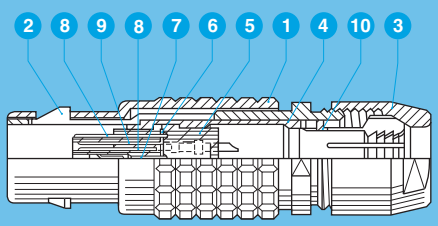

Straight plug

1. outer shell
2. latch sleeve
3. collet nut
4. split centre-piece
5. insulator
6. printed circuit
7. female contact
8. male intermediate contact
9. female intermediate contact
10. collet

Technical Characteristics

Mechanical and Climatical

Characteristics	Value	Standard
Endurance	> 1000 cycles	IEC 60512-5 test 9a
Temperature range[1)]	-40° C, +120° C	
Salt spray corrosion test	> 144h	IEC 60512-6 test 11f
Protection index	IP50	IEC 60529

Note:
[1)] for bridge plug: -40° C, +80° C
Detailed electrical characteristics, as well as materials and treatment are presented in the chapter Technical Characteristics on page 171.

Electrical

Characteristics		Value	Standard
Insulation resistance		> $10^{11}\Omega$	IEC 60512-2 test 3a
Insul. res. after 48h 95%RH		> $10^{10}\Omega$	IEC 60512-2 test 3a
Screening efficiency	at 10 MHz	> 70 dB	IEC 60169-1-3
	at 1 GHz	> 35 dB	IEC 60169-1-3
Contact resistance		< 20mΩ	IEC 60512-2 test 2a

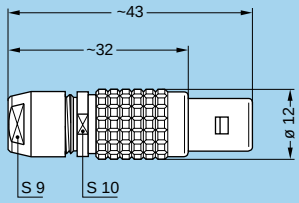

FFA Straight plug, cable collet

Part number
FFA.1D.694.CNLD42
FFA.1D.694.CNLD52
FFA.1D.694.CNLD62
FFA.1D.694.CNLD72
FFA.1D.694.CNLD76

Cable assembly (page 128)

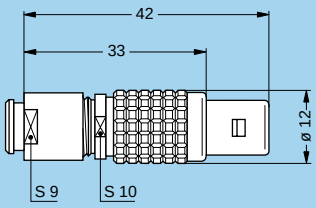

FFA Straight plug, cable collet and nut for fitting a bend relief

Part number
FFA.1D.694.CNLD42Z
FFA.1D.694.CNLD52Z
FFA.1D.694.CNLD62Z
FFA.1D.694.CNLD72Z

Cable assembly (page 128)

Note: The bend relief must be ordered separately (see page 141).

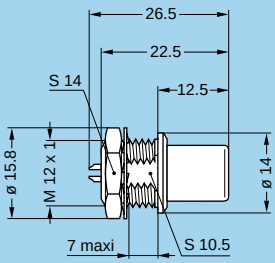

FAA Fixed plug, nut fixing, non-latching

Part number
FAA.1D.694.CNL

Panel cut-out (page 128)

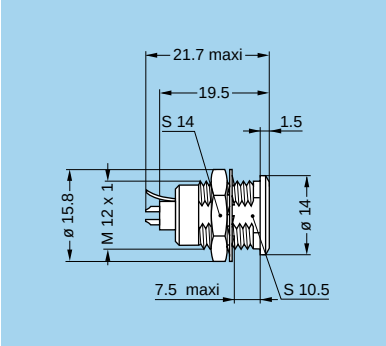

ERN Fixed socket nut fixing, with earthing tag

Part number
ERN.1D.694.CNA

Panel cut-out (page 128)

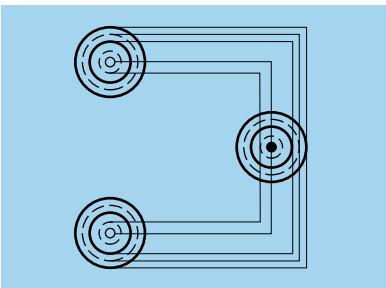

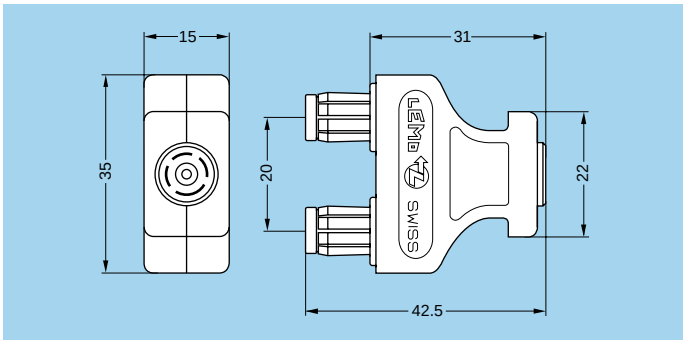

CFF Bridge plug with two non-latching plugs

CRF Bridge plug with two non-latching plugs with monitoring output

Part number
CFF.1D.694.PNMG
CRF.1D.694.PNFG

Note: the last letter (G) of the part number indicates the grey colour of the housing. For other colours, replace this letter (G) by the one corresponding to the required colour.

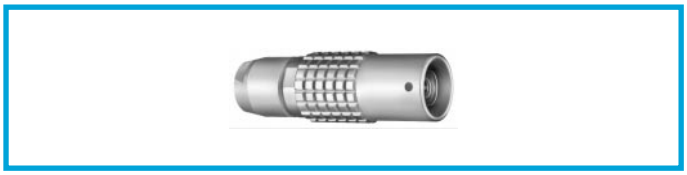

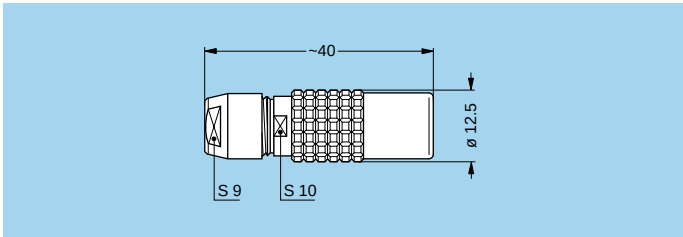

PCA Free socket, cable collet

Part number
PCA.1D.694.CNAD42
PCA.1D.694.CNAD52
PCA.1D.694.CNAD62
PCA.1D.694.CNAD72
PCA.1D.694.CNAD76

Cable assembly (page 128)

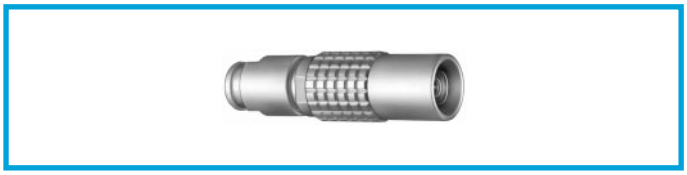

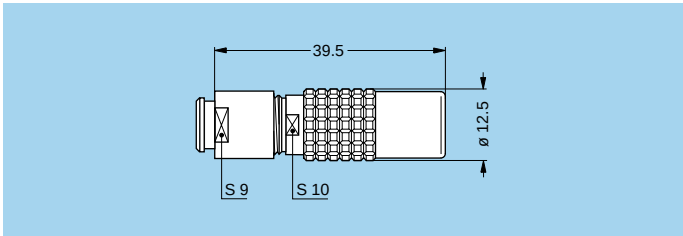

PCA Free socket, cable collet and nut for fitting a bend relief

Part number
PCA.1D.694.CNAD42Z
PCA.1D.694.CNAD52Z
PCA.1D.694.CNAD62Z
PCA.1D.694.CNAD72Z

Cable assembly (page 128)

Note: The bend relief must be ordered separately (see page 141).

Insert configuration (1D series)

Male solder contacts	Female solder contacts	Reference	Number of contacts	Contact type: Solder	Test voltage (kV rms)[1) 2)]	Test voltage (kV dc)[1) 2)]	Rated current (A)[1)]
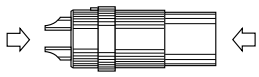 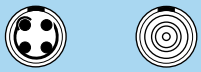	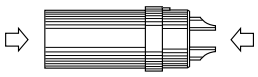	694	4	●	0.42	0.6	0.5

Note: 1) see calculation method, caution and suggested standard on page 178.
2) lowest measured value; contact to contact or contact to shell.

Housings (1D series)

Ref.	Outer shell and collet nut		Latch sleeve + earthing crown		Other metallic components		Remarks	Note
	Material	Surf. treatment	Material	Surf. treatment	Material	Surf. treatment		
C	Brass	chrome	brass/bronze	nickel	brass	nickel		●
P	PA.6	–	brass/bronze	nickel	brass	nickel	Only for CFF and CRF bridge plug [1)]	●

Note: detailed characteristics of these materials and treatments are presented on page 171. [1)] see «variant» for the colour.

● First choice alternative
○ Special order alternative

Contacts (1D series)

Ref.	Contact type	Remarks
A	Male solder center contact	For sockets
L	Female solder center contact	For plugs

Collets (1D series)

D type collets for 1D series

D type

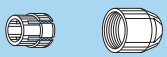

	Reference		Cable ø		Notes
	Type	Code	max.	min.	
1D	D	42	4.2	3.1	
	D	52	5.2	> 4.2	
	D	62	6.2	> 5.2	

D type collets for 1D series

D type

	Reference		Cable ø		Notes
	Type	Code	max.	min.	
1D	D	72	7.2	> 6.2	
	D	76	7.6	> 7.2	1)

Note: 1) these collets cannot be used for connector models with nut for fitting a bend relief. All dimensions are in millimetres.

Variant (1D series)

Bend relief for 1D series models with collet

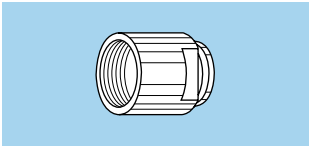

	Ref.	Collet	
		Type	Code
1D	Z	D	42 to 72

Need to be ordered

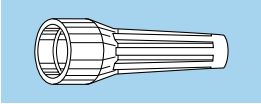

Need to be ordered separately (see pages 141 and 142)
GMA.1B.●●●.●●

Colour of the bridge plug shells

Reference	Colour
A	blue
B	white
G	grey
J	yellow
M	brown
N	black
R	red
V	green

Accessories and Tooling (1D series)

Accessories and tooling for the 1D series are identical with the 1B series. Please refer to corresponding pages (page 135 and 146).

Panel cut-outs (1D series)

Panel cut-out

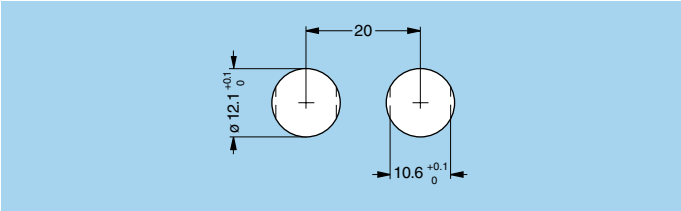

Note: mounting nut torque: 4.5 Nm (1N = 0.102 kg)
When connectors are assembled with double panel washers or insulating washers the mounting nut torque is 4 Nm.

Cable assembly (1D series)

Cable stripping lengths (1D series)

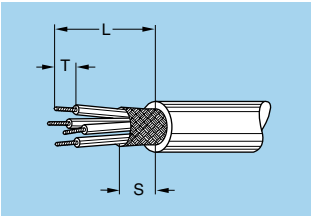

Connector		ø contact A (mm)	Cable stripping lengths (mm)		
Series	Type		L	S	T
1D	694	–	14	8	3

Note: the tolerances on these dimensions are: L: ± 0.5 mm; S: ± 0.5 mm; T: ± 0.2 mm.

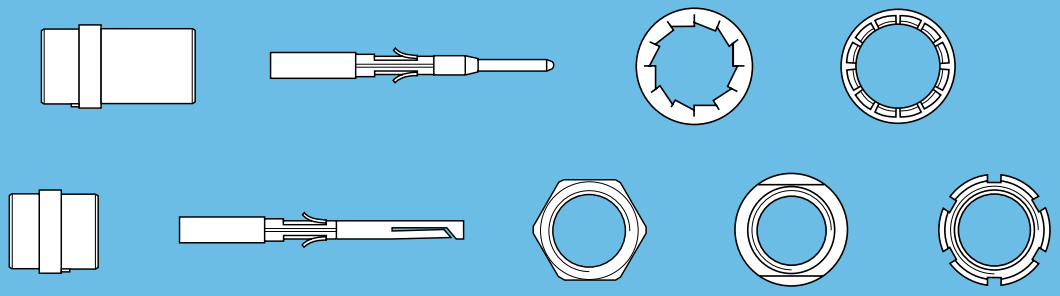

SPARE PARTS

Spare parts

male

female

FGG-EGG Insulators for crimp contacts

	Type	Insulator part number	
		Male contact	Female contact
00	302	FGG.00.302.YL	EGG.00.402.YL
	303	FGG.00.303.YL	EGG.00.403.YL
	304	FGG.00.304.YL	EGG.00.404.YL
0B 0K	302	FGG.0B.302.YL	EGG.0B.402.YL
	303	FGG.0B.303.YL	EGG.0B.403.YL
	304	FGG.0B.304.YL	EGG.0B.404.YL
	305	FGG.0B.305.YL	EGG.0B.405.YL
	306	FGG.0B.306.YL	–
	307	FGG.0B.307.YL	–
	309	FGG.0B.309.YL	–
1B 1K	302	FGG.1B.302.YL	EGG.1B.402.YL
	303	FGG.1B.303.YL	EGG.1B.403.YL
	304	FGG.1B.304.YL	EGG.1B.404.YL
	305	FGG.1B.305.YL	EGG.1B.405.YL
	306	FGG.1B.306.YL	EGG.1B.406.YL
	307	FGG.1B.307.YL	EGG.1B.407.YL
	308	FGG.1B.308.YL	EGG.1B.408.YL
	310	FGG.1B.310.YL	–
	314	FGG.1B.314.YL	–
	316	FGG.1B.316.YL	–
2B 2K	302	FGG.2B.302.YL	EGG.2B.402.YL
	303	FGG.2B.303.YL	EGG.2B.403.YL
	304	FGG.2B.304.YL	EGG.2B.404.YL
	305	FGG.2B.305.YL	EGG.2B.405.YL
	306	FGG.2B.306.YL	EGG.2B.406.YL
	307	FGG.2B.307.YL	EGG.2B.407.YL
	308	FGG.2B.308.YL	EGG.2B.408.YL
	310	FGG.2B.310.YL	EGG.2B.410.YL
	312	FGG.2B.312.YL	EGG.2B.412.YL
	314	FGG.2B.314.YL	EGG.2B.414.YL
	316	FGG.2B.316.YL	EGG.2B.416.YL
	318	FGG.2B.318.YL	EGG.2B.418.YL
	319	FGG.2B.319.YL	EGG.2B.419.YL
3B 3K	302	FGG.3B.302.YL	EGG.3B.402.YL
	303	FGG.3B.303.YL	EGG.3B.403.YL
	304	FGG.3B.304.YL	EGG.3B.404.YL
	305	FGG.3B.305.YL	EGG.3B.405.YL
	306	FGG.3B.306.YL	EGG.3B.406.YL
	307	FGG.3B.307.YL	EGG.3B.407.YL

	Type	Insulator part number	
		Male contact	Female contact
3B 3K	308	FGG.3B.308.YL	EGG.3B.408.YL
	309	FGG.3B.309.ML	EGG.3B.409.ML
	310	FGG.3B.310.YL	EGG.3B.410.YL
	312	FGG.3B.312.YL	EGG.3B.412.YL
	314	FGG.3B.314.YL	EGG.3B.414.YL
	316	FGG.3B.316.YL	EGG.3B.416.YL
	318	FGG.3B.318.YL	EGG.3B.418.YL
	320	FGG.3B.320.YL	EGG.3B.420.YL
	322	FGG.3B.322.YL	EGG.3B.422.YL
	324	FGG.3B.324.YL	EGG.3B.424.YL
	326	FGG.3B.326.YL	EGG.3B.426.YL
	330	FGG.3B.330.YL	EGG.3B.430.YL
4B 4K	304	FGG.4B.304.YL	EGG.4B.404.YL
	306	FGG.4B.306.YL	EGG.4B.406.YL
	307	FGG.4B.307.YL	EGG.4B.407.YL
	310	FGG.4B.310.YL	EGG.4B.410.YL
	312	FGG.4B.312.YL	EGG.4B.412.YL
	316	FGG.4B.316.YL	EGG.4B.416.YL
	320	FGG.4B.320.YL	EGG.4B.420.YL
	324	FGG.4B.324.YL	EGG.4B.424.YL
	330	FGG.4B.330.YL	EGG.4B.430.YL
	340	FGG.4B.340.YL	EGG.4B.440.YL
	348	FGG.4B.348.YL	EGG.4B.448.YL
5B 5K	304	FGG.5B.304.ML	EGG.5B.404.ML
	310	FGG.5B.310.YL	EGG.5B.410.YL
	314	FGG.5B.314.YL	EGG.5B.414.YL
	316	FGG.5B.316.YL	EGG.5B.416.YL
	320	FGG.5B.320.YL	EGG.5B.420.YL
	330	FGG.5B.330.YL	EGG.5B.430.YL
	340	FGG.5B.340.YL	EGG.5B.440.YL
	348	FGG.5B.348.YL	EGG.5B.448.YL
	350	FGG.5B.350.ML	EGG.5B.450.ML
	354	FGG.5B.354.YL	EGG.5B.454.YL
	364	FGG.5B.364.YL	EGG.5B.464.YL

Note: each insulator can be used both for crimp contacts of normal shape (fig. 1) or with reduced solder cups (fig. 2) as shown on page 131.

FGG-EGG Crimp contacts

Fig. 1

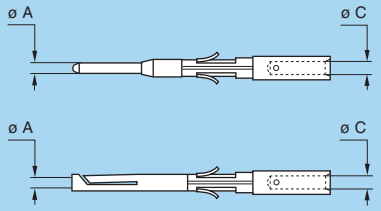

Fig. 2

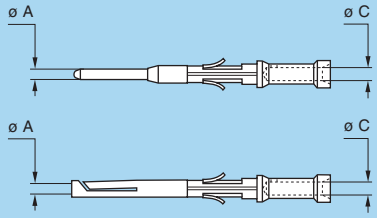

	Types	ø A (mm)	ø C (mm)	Contact part number	
				Male	Female
00	302	0.5	0.45	FGG.00.554.ZZC	EGG.00.654.ZZM
	303	0.5	0.45	FGG.00.554.ZZC	EGG.00.654.ZZM
	304	0.5	0.45	FGG.00.554.ZZC	EGG.00.654.ZZM
0B 0K	302/303	0.9	1.10	FGG.0B.560.ZZC	EGG.0B.660.ZZM
	304/305	0.7	0.80	FGG.0B.555.ZZC	EGG.0B.655.ZZM
	306/307/309	0.5	0.45	FGG.0B.554.ZZC	–
0S	302	0.9	1.10	FGG.0B.560.ZZC	EGG.0B.660.ZZM
	304	0.7	0.80	FGG.0B.555.ZZC	EGG.0B.655.ZZM
1B 1K	302/303	1.3	1.40	FGG.1B.565.ZZC	EGG.1B.665.ZZM
	304/305	0.9	1.10	FGG.1B.560.ZZC	EGG.1B.660.ZZM
	306/307/308	0.7	0.80	FGG.1B.555.ZZC	EGG.1B.655.ZZM
	310/314/316	0.5	0.45	FGG.1B.554.ZZC	–
1S	302	1.3	1.40	FGG.1B.565.ZZC	EGG.1B.665.ZZM
	304	0.9	1.10	FGG.1B.560.ZZC	EGG.1B.660.ZZM
2B 2K	302	2.0	2.40	FGG.2B.575.ZZC	EGG.2B.675.ZZM
	303	1.6	1.90	FGG.2B.570.ZZC	EGG.2B.670.ZZM
	304/305	1.3	1.40	FGG.2B.565.ZZC	EGG.2B.665.ZZM
	306/307	1.3	1.40	FGG.2B.565.ZZC	EGG.2B.665.ZZM
	308/310	0.9	1.10	FGG.2B.560.ZZC	EGG.2B.660.ZZM
	312/314/316	0.7	0.80	FGG.2B.555.ZZC	EGG.2B.655.ZZM
	318/319	0.7	0.80	FGG.2B.555.ZZC	EGG.2B.655.ZZM
2S	306	1.3	1.40	FGG.2B.565.ZZC	EGG.2B.665.ZZM
3B 3K	302	3.0	2.90	FGG.3B.580.ZZC	EGG.3B.680.ZZM
	303/304/309	2.0	2.40	FGG.3B.575.ZZC	EGG.3B.675.ZZM
	305/306/307	1.6	1.90	FGG.3B.570.ZZC	EGG.3B.670.ZZM
	308/309/310	1.3	1.40	FGG.3B.565.ZZC	EGG.3B.665.ZZM
	312/314	0.9	1.10	FGG.3B.560.ZZC	EGG.3B.660.ZZM
	316/318	0.9	1.10	FGG.3B.560.ZZC	EGG.3B.660.ZZM
	320/322/324	0.7	0.80	FGG.3B.555.ZZC	EGG.3B.655.ZZM
	326/330	0.7	0.80	FGG.3B.555.ZZC	EGG.3B.655.ZZM
4B 4K	304	3.0	2.90	FGG.4B.580.ZZC	EGG.4B.680.ZZM
	306/307	2.0	2.40	FGG.4B.575.ZZC	EGG.4B.675.ZZM
	310	1.6	1.90	FGG.4B.570.ZZC	EGG.4B.670.ZZM
	312	1.3	1.40	FGG.4B.565.ZZC	EGG.4B.665.ZZM
	316/320	0.9	1.10	FGG.4B.560.ZZC	EGG.4B.660.ZZM
	324/330	0.9	1.10	FGG.4B.560.ZZC	EGG.4B.660.ZZM
	340/348	0.7	0.80	FGG.4B.555.ZZC	EGG.4B.655.ZZM
5B 5K	304	4.0	4.00	FGG.5B.582.ZZC	EGG.5B.682.ZZM
	310	3.0	2.90	FGG.5B.580.ZZC	EGG.5B.680.ZZM
	314/316	2.0	2.40	FGG.5B.575.ZZC	EGG.5B.675.ZZM
	320	1.6	1.90	FGG.5B.570.ZZC	EGG.5B.670.ZZM
	330/340/348	1.3	1.40	FGG.5B.565.ZZC	EGG.5B.665.ZZM
	350/354/364	0.9	1.10	FGG.5B.560.ZZC	EGG.5B.660.ZZM

	Types	ø A (mm)	ø C (mm)	Contact part number	
				Male	Female
0B 0K	302/303	0.9	0.80	FGG.0B.561.ZZC	EGG.0B.661.ZZM
	302/303	0.9	0.45	FGG.0B.562.ZZC	EGG.0B.662.ZZM
	304/305	0.7	0.45	FGG.0B.556.ZZC	EGG.0B.656.ZZM
0S	302	0.9	0.80	FGG.0B.561.ZZC	EGG.0B.661.ZZM
	302	0.9	0.45	FGG.0B.562.ZZC	EGG.0B.662.ZZM
	304	0.7	0.45	FGG.0B.556.ZZC	EGG.0B.656.ZZM
1B 1K	302/303	1.3	1.10	FGG.1B.566.ZZC	EGG.1B.666.ZZM
	304/305	0.9	0.80	FGG.1B.561.ZZC	EGG.1B.661.ZZM
	306/307/308	0.7	0.45	FGG.1B.556.ZZC	EGG.1B.656.ZZM
1S	302	1.3	1.10	FGG.1B.566.ZZC	EGG.1B.666.ZZM
	304	0.9	0.80	FGG.1B.561.ZZC	EGG.1B.661.ZZM
2B 2K	302	2.0	1.90	FGG.2B.576.ZZC	EGG.2B.676.ZZM
	303	1.6	1.40	FGG.2B.571.ZZC	EGG.2B.671.ZZM
	304/305	1.3	1.10	FGG.2B.566.ZZC	EGG.2B.666.ZZM
	306/307	1.3	1.10	FGG.2B.566.ZZC	EGG.2B.666.ZZM
	304/305	1.3	0.80	FGG.2B.567.ZZC	EGG.2B.667.ZZM
	306/307	1.3	0.80	FGG.2B.567.ZZC	EGG.2B.667.ZZM
	308/310	0.9	0.80	FGG.2B.561.ZZC	EGG.2B.661.ZZM
	308/310	0.9	0.45	FGG.2B.562.ZZC	EGG.2B.662.ZZM
	312/314/316	0.7	0.45	FGG.2B.556.ZZC	EGG.2B.656.ZZM
	318/319	0.7	0.45	FGG.2B.556.ZZC	EGG.2B.656.ZZM
2S	306	1.3	1.10	FGG.2B.566.ZZC	EGG.2B.666.ZZM
	306	1.3	0.80	FGG.2B.567.ZZC	EGG.2B.667.ZZM
3B 3K	303/304/309	2.0	1.90	FGG.3B.576.ZZC	EGG.3B.676.ZZM
	305/306/307	1.6	1.40	FGG.3B.571.ZZC	EGG.3B.671.ZZM
	308/309/310	1.3	1.10	FGG.3B.566.ZZC	EGG.3B.666.ZZM
	312/314	0.9	0.80	FGG.3B.561.ZZC	EGG.3B.661.ZZM
	316/318	0.9	0.80	FGG.3B.561.ZZC	EGG.3B.661.ZZM
	316/318	0.9	0.45	FGG.3B.562.ZZC	EGG.3B.662.ZZM
	320/322/324	0.7	0.45	FGG.3B.556.ZZC	EGG.3B.656.ZZM
	326/330	0.7	0.45	FGG.3B.556.ZZC	EGG.3B.656.ZZM
4B 4K	306/307	2.0	1.90	FGG.4B.576.ZZC	EGG.4B.676.ZZM
	310	1.6	1.40	FGG.4B.571.ZZC	EGG.4B.671.ZZM
	312	1.3	1.10	FGG.4B.566.ZZC	EGG.4B.666.ZZM
	316/320	0.9	0.80	FGG.4B.561.ZZC	EGG.4B.661.ZZM
	324/330	0.9	0.80	FGG.4B.561.ZZC	EGG.4B.661.ZZM
	340/348	0.7	0.45	FGG.4B.556.ZZC	EGG.4B.656.ZZM
5B 5K	314/316	2.0	1.90	FGG.5B.576.ZZC	EGG.5B.676.ZZM
	320	1.6	1.40	FGG.5B.571.ZZC	EGG.5B.671.ZZM
	330/340/348	1.3	1.10	FGG.5B.566.ZZC	EGG.5B.666.ZZM
	330/340/348	1.3	0.80	FGG.5B.567.ZZC	EGG.5B.667.ZZM
	350/354/364	0.9	0.80	FGG.5B.561.ZZC	EGG.5B.661.ZZM

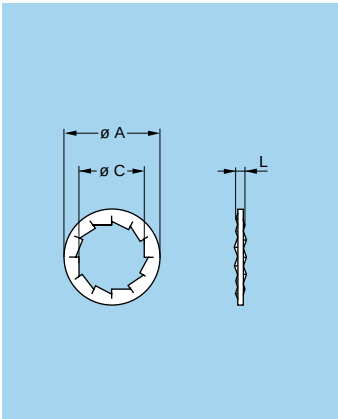

GBA Locking washers

Part number	Series	Dimensions (mm)		
		A	C	L
GBA.00.250.FN	00	9.5	7.1	1.0
GBA.0S.250.FN	0S-0B	12.5	9.1	1.0
GBA.1S.250.FN	1S-1B 1D	16.0	12.1	1.0
GBA.1E.250.FN	1E-1K	21.8	16.1	1.2
GBA.2S.250.FN	2S-2B 2C-2G	19.5	15.1	1.2
GBA.3S.250.FN	3S-3B	25.0	18.1	1.4
GBA.4S.250.FN	4S-4B	32.0	25.1	1.4

- Material: Nickel-plated bronze (3 µm)

Note: to order this accessory separately, use the above part numbers.

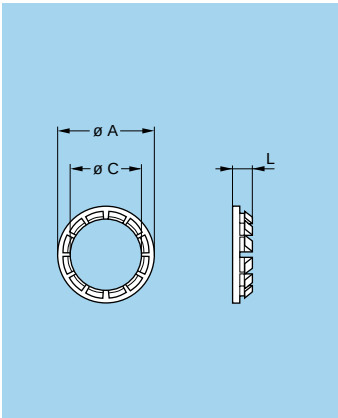

GBB Tapered washers

Part number	Series	Dimensions (mm)		
		A	C	L
GBB.00.250.LN	00	9	7.1	2.0
GBB.0S.250.LN	0S-0B	11	9.1	2.5
GBB.1S.250.LN	1S-1B	15	12.1	3.5
GBB.2S.250.LN	2S-2B 2C-2G	18	15.1	4.0
GBB.3S.250.LN	3S-3B	22	18.1	4.5
GBB.4S.250.LN	4S-4B	28	25.2	5.0
GBB.5S.250.LN	5S-5B	40	35.2	7.5

- Material: Nickel-plated brass (3 µm)

Note: sockets of series 5B and 5S are always supplied with a tapered washer. To order this accessory separately, use the above part numbers.

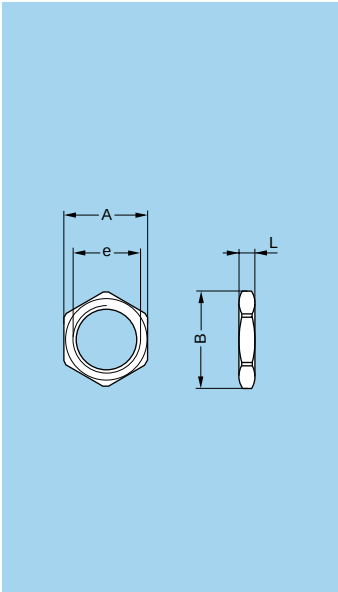

GEA Hexagonal nuts

Part number	Series	Dimensions (mm)			
		A	B	e	L
GEA.00.240.LN	00	9	10.2	M7 x 0.50	2.0
GEA.0S.240.LN	0S-0B	11	12.4	M 9 x 0.60	2.0
GEA.0S.241.LN	0S-0B	12	13.8	M10 x 0.75	2.5
GEA.0E.240.LN	0E-0K-0L 1S-1B	17	19.2	M14 x 1.00	2.5
GEA.1S.240.LN	1S-1B-1D	14	15.8	M12 x 1.00	2.5
GEA.1E.240.LN	1E-1K-1L 2S-2B	19	21.5	M16 x 1.00	3.0
GEA.2S.240.LN	2S-2B	17	19.2	M15 x 1.00	2.7
GEA.2E.240.LN	2E-2K-2L	24	27.0	M20 x 1.00	4.0
GEA.3S.240.LN	3S-3B	22	25.0	M18 x 1.00	3.0
GEA.3E.240.LN	3E-3K	30	34.0	M24 x 1.00	5.0
GEA.4S.240.LN	4S-4B	30	34.0	M25 x 1.00	5.0
GEA.4E.240.LN	4E-4K	36	40.5	M30 x 1.00	7.0

- Material:
  – Nickel-plated brass (3 µm)
  – Natural anodized aluminium alloy
  – Stainless steel

Note: to order this part separately, use the above part numbers. The last letters «LN» of the part number refer to the nut material and treatment. If a nut in aluminium alloy or stainless steel is desired, replace the last letters of the part number by «PT» or «AZ» respectively.

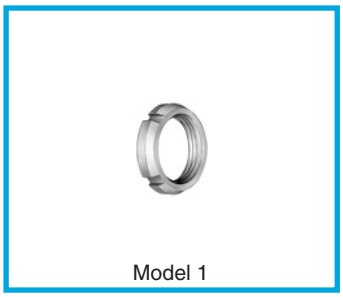
Model 1

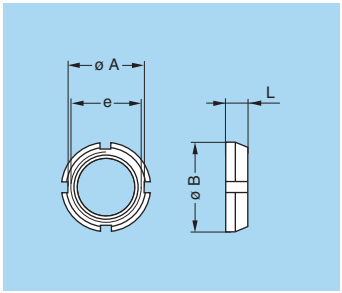

Model 2

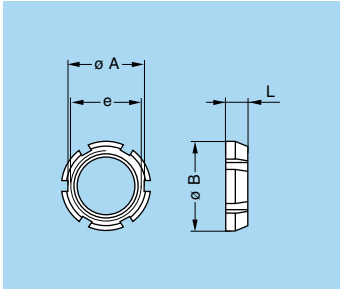

GEG Notched nut

Part number	Model	Dimensions (mm)			
		A	B	e	L
GEG.00.240.LC	1	8.6	10	M7 x 0.5	2.5
GEG.0S.240.LC	1	10.5	12	M9 x 0.6	2.5
GEG.0E.240.LC	1	15.8	18	M14 x 1.0	3.5
GEG.1S.240.LC	1	14.0	16	M12 x 1.0	3.5
GEG.1E.240.LC	2	17.5	20	M16 x 1.0	3.5
GEG.1S.242.LC	1	12.1	14	M11 x 0.5	3.5
GEG.2S.240.LC	2	17.5	20	M15 x 1.0	3.5
GEG.2S.241.LC	2	20.5	24	M19 x 1.0	3.5
GEG.2E.240.LC	2	22.5	25	M20 x 1.0	3.5

- Material: Chrome-plated brass (Ni 3 µm + Cr 0.3 µm)

Note: 00, 0B, 0S, 1B, 1S, 2B and 2S series fixed and free sockets for back panel mounting are always delivered with this notched nut.
To order this accessory separately, use the above part numbers.

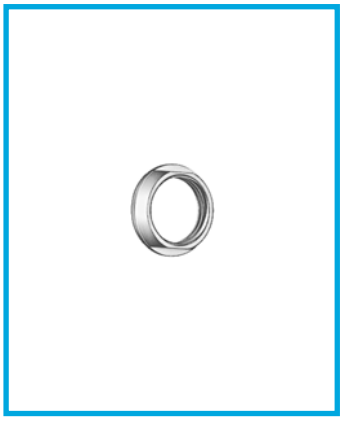

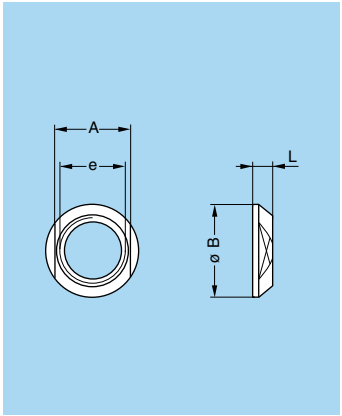

- Material: Chrome-plated brass (Ni 3 µm + Cr 0.3 µm)

Note: 3B, 3K, 3S, 3E, 4B, 4K, 4S, 4E, 5B, 5K, 5S, 5E, 6S and 6E series fixed and free sockets for back panel mounting are always delivered with a conical nut. To order this accessory separately, use the part numbers in the adjacent table.

GEC Conical nuts

Part number	Dimensions (mm)			
	A	B	e	L
GEC.00.240.LC	8	10.0	M7 x 0.5	2.5
GEC.0S.240.LC	10	12.0	M9 x 0.6	2.5
GEC.0E.240.LC	16	18.0	M14 x 1.0	3.0
GEC.1S.240.LC	13	16.0	M12 x 1.0	3.2
GEC.1S.241.LC	17	20.0	M16 x 1.0	4.0
GEC.1S.242.LC	12	14.0	M11 x 0.5	3.2
GEC.2S.240.LC	17	20.0	M15 x 1.0	3.8
GEC.2S.241.LC	20	24.0	M19 x 1.0	5.8
GEC.2E.240.LC	22	25.0	M20 x 1.0	5.0
GEC.3S.240.LC	20	24.0	M18 x 1.0	4.5
GEC.3E.240.LC	27	30.0	M24 x 1.0	4.5
GEC.4S.240.LC	27	30.0	M25 x 1.0	4.5
GEC.4K.241.LC	32	35.5	M30 x 1.0	5.0
GEC.5S.240.LC	37	41.0	M35 x 1.0	5.0

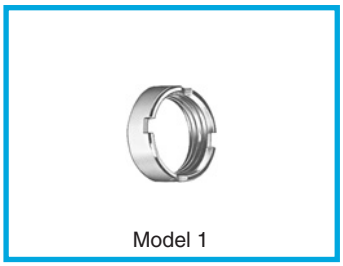
Model 1

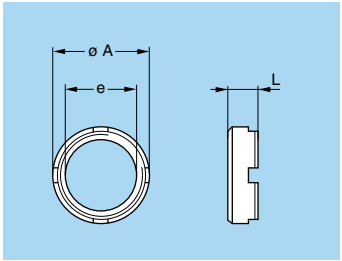

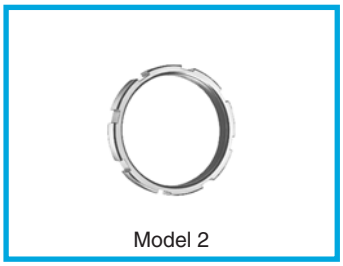
Model 2

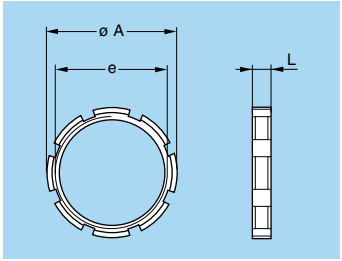

- Material: Nickel-plated brass (3 µm)

GEB Round nuts

Part number	Model	Dimensions (mm)		
		A	e	L
GEB.00.240.LN	1	9.0	M7 x 0.50	4.0
GEB.0S.240.LN	1	11.0	M9 x 0.60	4.0
GEB.0E.240.LN	1	18.0	M14 x 1.00	5.0
GEB.1S.240.LN	1	14.0	M12 x 1.00	5.0
GEB.1E.240.LN	1	20.0	M16 x 1.00	5.0
GEB.2S.240.LN	1	18.0	M15 x 1.00	5.5
GEB.2B.240.LN	1	17.5	M15 x 0.75	2.5
GEB.3S.240.LN	1	22.0	M18 x 1.00	5.5
GEB.4S.240.LN	1	28.0	M25 x 1.00	6.0
GEB.5S.240.LN	2	40.0	M35 x 1.00	8.0
GEB.5E.240.LN	2	54.0	M45 x 1.50	8.0
GEB.6S.241.LN	2	54.0	M48 x 1.50	8.0
GEB.6E.240.LN	2	65.0	M55 x 2.00	9.0

Note: 5B, 5K, 5S, 5E, 6S and 6E series sockets are always supplied with model 2 round nuts. To order this accessory separately, use the part numbers in the adjacent table.

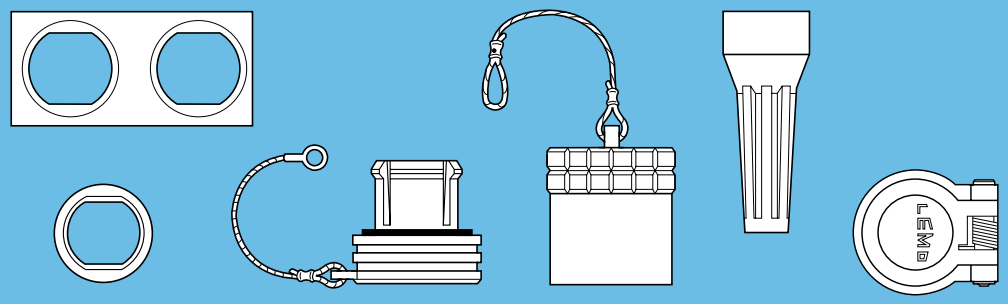

ACCESSORIES

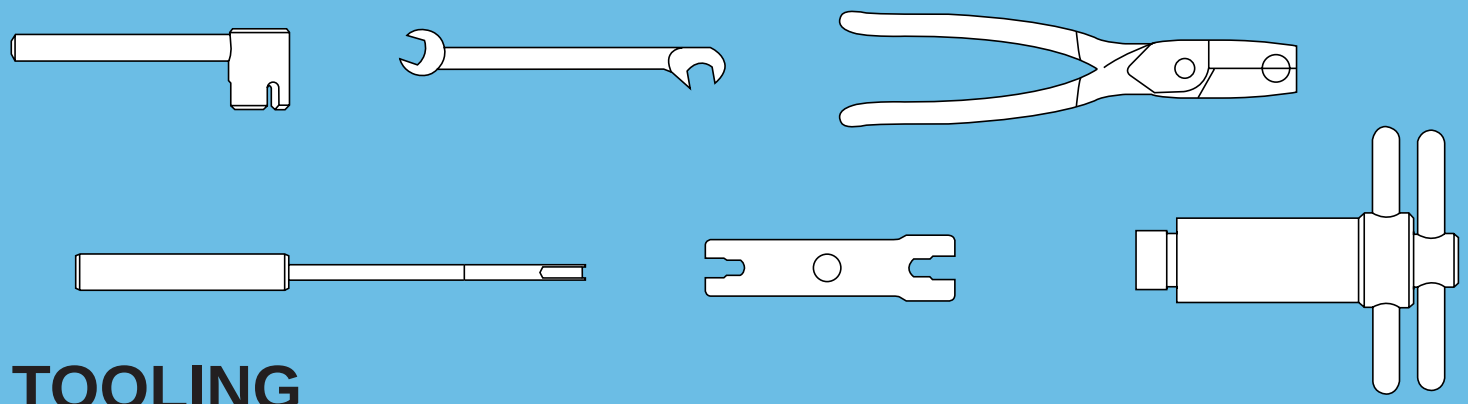

TOOLING

Accessories

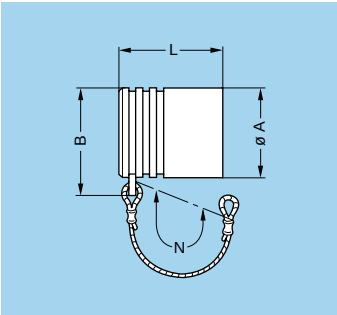

BFG Plug caps

Part number	Series	Dimensions (mm)			
		A	B	L	N
BFG.00.100 PCSG	00	7.5	9.8	10.0	60
BFG.0B.100.PCSG	0S-0B	9.5	12.0	12.2	85
BFG.1B.100.PCSG	1S-1B 1D	12.0	15.0	13.8	85
BFG.2B.100.PCSG	2S-2B	15.0	18.0	15.0	85
BFG.3B.100.PCSG	3S-3B	18.5	22.0	18.5	95

- Body material: Polyoxymethylene (POM) grey (or black)
- Cord material: Polyamide 6, grey (or black)
- Gasket material: Silicone rubber
- Maximum operating temperature: 100°C
- Watertightness: IP61 according to IEC 60529

Note: this cap is available only with an alignment key (G). Upon request this cap can be supplied in black and the last letter «G» of the part number should be replaced with «N».

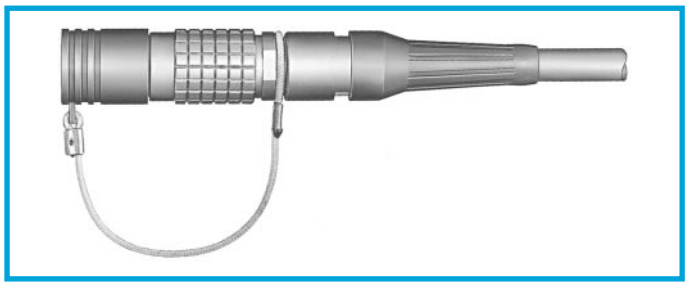

Fitting the cord

Slide the plug into the loop of the cord.
Place the loop into the groove in front of the collet nut and tighten the loop.

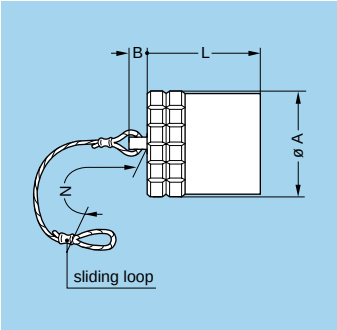

BFA Plug caps

Part number	Series	Dimensions (mm)			
		A	B	L	N
BFA.0E.100.NAS	0E	14.0	6	12.5	85
BFA.1E.100.NAS	1E	16.0	6	15.5	85
BFA.2E.100.NAS	2E	19.5	6	17.5	85
BFA.3E.100.NAS	3E	23.0	6	22.0	120
BFA.4E.100.NAS	4E	29.0	10	22.5	120
BFA.4S.100.NAS	4S	25.0	10	22.2	120
BFA.5E.100.NAS	5E	44.0	10	27.0	150
BFA.5S.100.NAS	5S	36.0	10	30.2	150
BFA.6S.100.NAS	6S	46.0	10	33.0	150

- Body material: Nickel-plated brass (Ni 3µm)
- Lanyard material: Stainless steel
- Crimp ferrule material: Nickel-plated brass + polyolefin
- O-ring material: Silicone rubber or FPM
- Maximum operating temperature: 135°C
- Watertightness: IP68 according to IEC 60529 for E series

Note: the last letter «S» of the part number stands for the material of the O-ring (silicone rubber). O-ring's made from FPM are also available; if required, replace the letter «S» by «V».

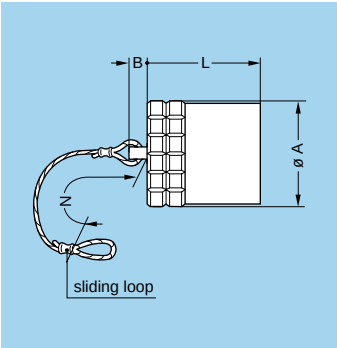

BFG Plug caps with key (G)

Part number	Series	Dimensions (mm)			
		A	B	L	N
BFG.0K.100.NAS	0K-0L	14.0	6	12.5	85
BFG.1K.100.NAS	1K-1L	16.0	6	15.5	85
BFG.2K.100.NAS	2K-2L	19.5	6	17.5	85
BFG.3K.100.NAS	3K	23.0	6	22.0	120
BFG.4B.100.NAS	4B	25.0	10	20.2	120
BFG.4K.100.NAS	4K	29.0	10	22.5	120
BFG.5B.100.NAS	5B	36.0	10	27.2	150
BFG.5K.100.NAS	5K	44.0	10	27.0	150
BFG.6E.100.NAS	6E	54.0	10	31.0	150

- Body material: Nickel-plated brass (Ni 3µm)
- Lanyard material: Stainless steel
- Crimp ferrule material: Nickel-plated brass + polyolefin
- O-ring material: Silicone rubber or FPM
- Maximum operating temperature: 135°C
- Watertightness: IP68 according to IEC 60529 for E and K series

Note: this cap is available only with an alignment key (G). The last letter «S» of the part number stands for the material of the O-ring (silicone rubber). O-ring's made from FPM are also available; if required, replace the letter «S» by «V».

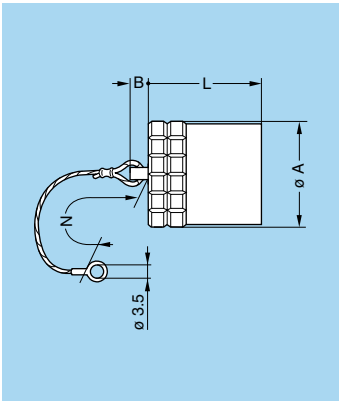

BHG Plug caps, nut fixing or flange

Part number	Series	Dimensions (mm)			
		A	B	L	N
BHG.0K.100.NAS	0K-0L	14.0	6	12.5	85
BHG.1K.100.NAS	1K-1L	16.0	6	15.5	85
BHG.2K.100.NAS	2K-2L	19.5	6	17.5	85
BHG.3K.100.NAS	3K	23.0	6	22.0	120
BHG.4B.100.NAS	4B	25.0	10	20.2	120
BHG.4K.100.NAS	4K	29.0	10	22.5	120
BHG.5B.100.NAS	5B	36.0	10	27.2	150
BHG.5K.100.NAS	5K	44.0	10	27.0	150
BHG.6E.100.NAS	6E	54.0	10	31.0	150

- Body material: Nickel-plated brass (Ni 3µm)
- Lanyard material: Stainless steel
- Crimp ferrule material: Nickel-plated brass + polyolefin
- O-ring material: Silicone rubber or FPM
- Maximum operating temperature: 135°C
- Watertightness: IP68 according to IEC 60529 for E and K series

Note: this cap is available only with an alignment key (G). The last letter «S» of the part number stands for the material of the O-ring (silicone rubber). O-ring's made from FPM are also available; if required, replace the letter «S» by «V».

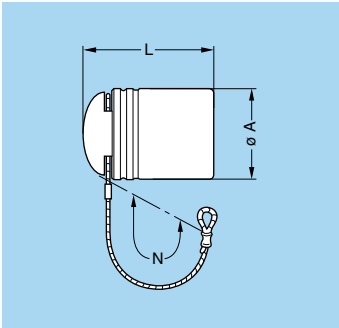

BFG Plug cap

Part number	Series	Dimensions (mm)		
		A	L	N
BFG.3K.100.EAN	3K	24	30	155

- Material: black EPDM
- Lanyard material: Stainless steel
- Crimp ferrule material: Stainless steel AISI 304 + polyolefin

Note: These caps are suitable for use with any alignment key configuration.

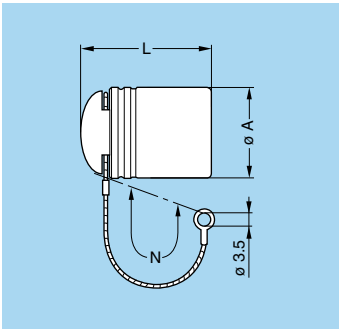

BHA Plug cap

Part number	Series	Dimensions (mm)		
		A	L	N
BHA.3K.100.EAN	3K	24	30	120

- Material: black EPDM
- Lanyard material: Stainless steel
- Crimp ferrule material: Stainless steel AISI 304 + polyolefin

Note: These caps are suitable for use with any alignment key configuration.

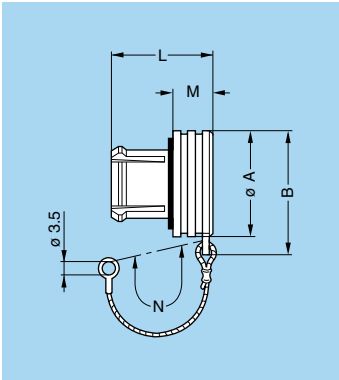

BRA Blanking caps for fixed sockets and free straight sockets

Part number	Series	Dimensions (mm)				
		A	B	L	M	N
BRA.00.200.PCSG	00	7.5	9.8	9.0	3.5	60
BRA.0B.200.PCSG	0S-0B	10.0	12.5	11.0	4.8	60
BRA.1B.200.PCSG	1S-1B 1D	14.0	17.0	13.5	5.6	60
BRA.2B.200.PCSG	2S-2B 2C-2G	18.0	21.0	14.5	6.0	60
BRA.3B.200.PCSG	3S-3B	22.0	25.5	17.0	7.0	60

- Body material: Polyoxymethylene (POM) grey (or black)
- Cord material: Polyamide 6, grey (or black)
- Gasket material: Silicone rubber
- Maximum operating temperature: 100°C
- Watertightness: IP61 according to IEC 60529

Note: these caps are suitable for use with any alignment key configuration. On request this cap can be supplied in black. If so, replace the last letter «G» of the part number by «N».

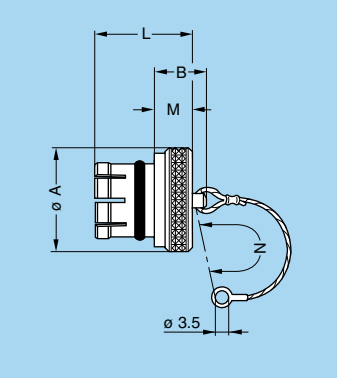

BRE Blanking caps for fixed sockets

Part number	Series	Dimensions (mm)				
		A	B	L	M	N
BRE.00.200.NAS	00	8	7.5	8.8	3.5	60
BRE.0S.200.NAS	0S-0B	10	9.5	10.5	4.5	85
BRE.1S.200.NAS	1S-1B 1D	14	11.0	12.5	5.0	85
BRE.2S.200.NAS	2S-2B	18	12.0	14.0	6.0	85
BRE.3S.200.NAS	3S-3B	22	14.0	18.0	8.0	120
BRE.4S.200.NAS	4S-4B	28	20.0	23.0	10.0	120
BRE.5S.200.NAS	5S-5B	40	22.0	30.0	12.0	150
BRE.6S.200.NAS	6S	54	22.0	30.0	12.0	150
BRE.6E.200.NAS	6E	57	24.0	31.5	14.0	150

- Body material: Nickel-plated brass (Ni 3 µm)
- Lanyard material: Stainless steel
- Crimp ferrule material: Nickel-plated brass + polyolefin
- O-ring material: Silicone rubber or FPM
- Maximum operating temperature: 135°C
- Watertightness: IP61 according to IEC 60529 for S series

Note: these caps are suitable for use with any alignment key configuration. The last letter «S» of the part number stands for the O-ring material (silicone rubber). O-ring's made from FPM are also available; if required, replace the letter «S» by «V».

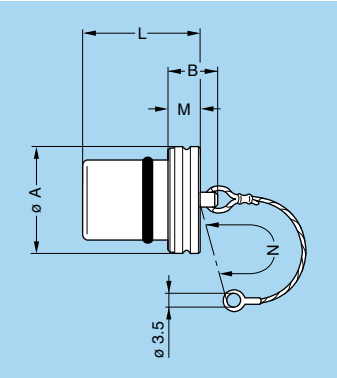

BRE Blanking caps for fixed sockets

Part number	Series	Dimensions (mm)				
		A	B	L	M	N
BRE.0K.200.NAS	0K-0E-0L	15.0	10	15.0	4	85
BRE.1K.200.NAS	1K-1E-1L	17.0	12	20.0	6	85
BRE.2K.200.NAS	2K-2E-2L	20.5	14	24.0	8	85
BRE.3K.200.NAS	3K-3E	24.0	14	28.0	8	120
BRE.4K.200.NAS	4K-4E	30.0	20	30.5	10	120
BRE.5K.200.NAS	5K-5E	44.0	22	37.0	12	150

- Body material: Nickel-plated brass (Ni 3 µm)
- Lanyard material: Stainless steel
- Crimp ferrule material: Nickel-plated brass + polyolefin
- O-ring material: Silicone rubber or FPM
- Maximum operating temperature: 135°C
- Watertightness: IP68 according to IEC 60529

Note: these caps are suitable for use with any alignment key configuration. The last letter «S» of the part number stands for the O-ring material (silicone rubber). O-ring's made from FPM are also available; if required, replace the letter «S» by «V».

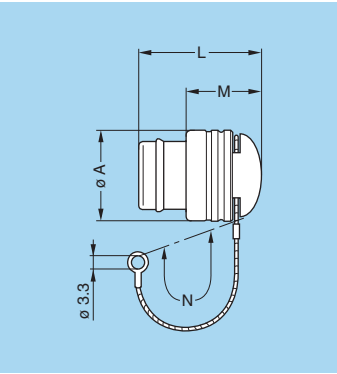

BRA Blanking caps for fixed sockets

Part number	Series	Dimensions (mm)			
		A	L	M	N
BRA.3K.200.EAN	3K	24	27	14.5	120
BRA.4K.200.EAN	4K	31	31	17.0	120

- Material: black EPDM
- Lanyard material: Stainless steel
- Crimp ferrule material: Stainless steel AISI 304 + polyolefin

Note: These caps are suitable for use with any alignment key configuration.

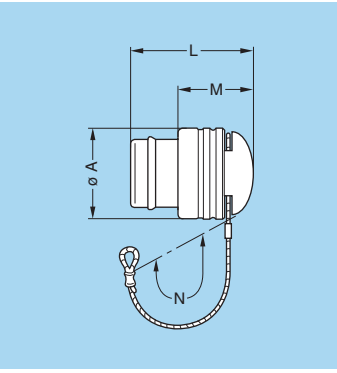

BRF Blanking caps for free sockets

Part number	Series	Dimensions (mm)			
		A	L	M	N
BRF.3K.200.EAN	3K	24	27	14.5	155

- Material: black EPDM
- Lanyard material: Stainless steel
- Crimp ferrule material: Stainless steel AISI 304 + polyolefin

Note: These caps are suitable for use with any alignment key configuration.

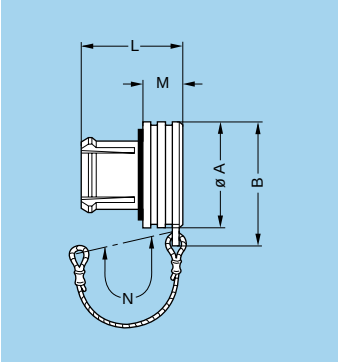

BRD Blanking caps for free sockets

Part number	Series	Dimensions (mm)				
		A	B	L	M	N
BRD.00.200.PCSG	00	7.5	9.8	9.0	3.5	85
BRD.0B.200.PCSG	0S-0B	10.0	12.5	11.0	4.8	85
BRD.1B.200.PCSG	1S-1B 1D	14.0	17.0	13.5	5.6	85
BRD.2B.200.PCSG	2S-2B	18.0	21.0	14.5	6.0	85
BRD.3B.200.PCSG	3S-3B	22.0	25.5	17.0	7.0	95

- Body material: Polyoxymethylene (POM) grey (or black)
- Cord material: Polyamide 6, grey (or black)
- Gasket material: Silicone rubber
- Maximum operating temperature: 100°C
- Watertightness: IP61 according to IEC 60529

Note: on request this cap is available in black. If required, replace the last letter «G» of the part number by «N».

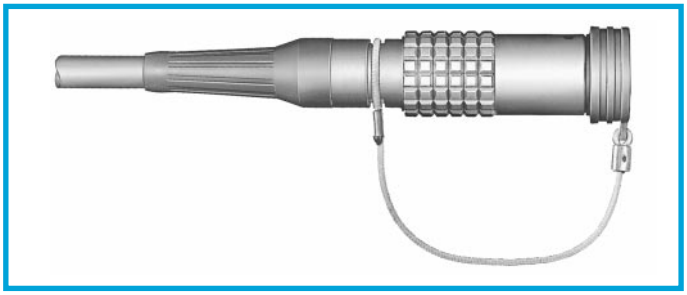

Fitting the cord

Slide the socket into the loop of the cord.
Place the loop into the groove in front of the collet nut.
Tighten the loop.

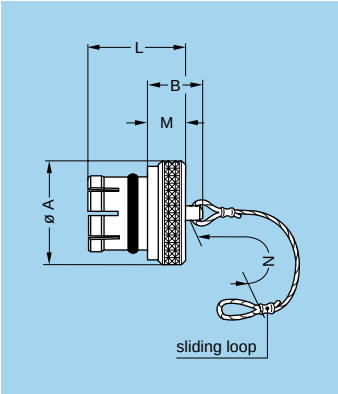

BRF Blanking caps for free sockets

Part number	Series	Dimensions (mm)				
		A	B	L	M	N
BRF.00.200.NAS	00	8	7.5	8.8	3.5	85
BRF.0S.200.NAS	0S-0B	10	9.5	10.5	4.5	85
BRF.1S.200.NAS	1S-1B 1D	14	11.0	12.5	5.0	85
BRF.2S.200.NAS	2S-2B	18	12.0	14.0	6.0	85
BRF.3S.200.NAS	3S-3B	22	14.0	18.0	8.0	120
BRF.4S.200.NAS	4S-4B	28	20.0	23.0	10.0	120
BRF.5S.200.NAS	5S-5B	40	22.0	30.0	12.0	150
BRF.6S.200.NAS	6S	54	22.0	30.0	12.0	150

- Body material: Nickel-plated brass (Ni 3 µm)
- Lanyard material: Stainless steel
- Crimp ferrule material: Nickel-plated brass + polyolefin
- O-ring material: Silicone rubber or FPM
- Maximum operating temperature: 135°C
- Watertightness: IP61 according to IEC 60529 for S series

Note: these caps are suitable for use with any alignment key configuration. The last letter «S» of the part number stands for the O-ring material (silicone rubber). O-ring's made from FPM are also available; if required, replace the letter «S» by «V».

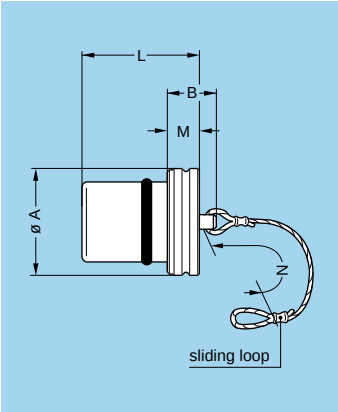

BRF Blanking caps for free sockets

Part number	Series	Dimensions (mm)				
		A	B	L	M	N
BRF.0K.200.NAS	0K-0E-0L	15.0	10	15.0	4	85
BRF.1K.200.NAS	1K-1E-1L	17.0	12	20.0	6	85
BRF.2K.200.NAS	2K-2E-2L	20.5	14	24.0	8	85
BRF.3K.200.NAS	3K-3E	24.0	14	28.0	8	120
BRF.4K.200.NAS	4K-4E	30.0	20	30.5	10	120
BRF.5K.200.NAS	5K-5E	44.0	22	37.0	12	150

Note: these caps are suitable for use with any alignment key configuration. The last letter «S» of the part number stands for the O-ring material (silicone rubber). O-ring's made from FPM are also available; if required, replace the letter «S» by «V».

- Body material: Nickel-plated brass (Ni 3 µm)
- Lanyard material: Stainless steel
- Crimp ferrule material: Nickel-plated brass + polyolefin

- O-ring material: Silicone rubber or FPM
- Maximum operating temperature: 135°C
- Watertightness: IP68 according to IEC 60529

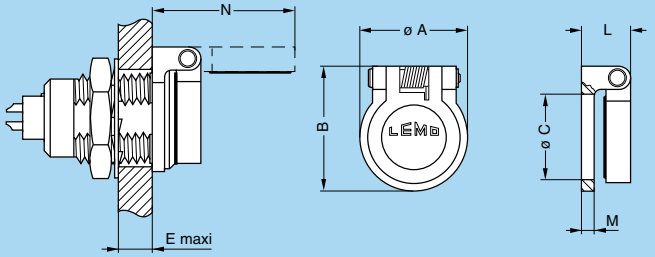

BRR Spring loaded dust caps for ERA, ERN and EG● sockets or PSA and PK● fixed sockets

Part number	Series	Dimensions (mm)						
		A	B	C	E	L	M	N
BRR.0S.200.PZSG	0S-0B	11.0	13.3	9.0	5.8	5.0	1.2	15.3
BRR.1S.200.PZSG	1S-1B 1D	14.2	17.1	12.0	6.0	6.3	1.5	20.3
BRR.2S.200.PZSG	2S-2B 2C-2G	18.6	22.4	15.2	6.5	8.2	2.0	26.2
BRR.3S.200.PZSG	3S-3B	22.5	26.5	18.2	9.0	8.8	2.5	30.8

Note: On request, this cap is available in black. If so replace the last letter «G» of the part number by «N».

- Body material: Polyoxymethylene (POM) grey (or black)
- Gasket material: Silicone rubber
- Spring material: Stainless steel
- Axes material: Nickel-plated brass
- Maximum operating temperature: 100°C
- Watertightness: IP61 according to IEC 60529

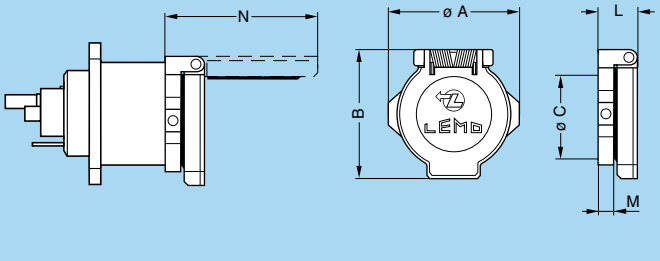

BRR Spring loaded dust cap for ED● and EB● fixed sockets

Part number	Series	Dimensions (mm)					
		A	B	C	L	M	N
BRR.3K.200.PZSG	3K	29	29	23	8.1	3	33.2

Note: Use Allen key (0.9 mm flat) to secure cap on connector.

- Cap material: Polyoxymethylene (POM) grey
- Body material: Nickel-plated brass
- Gasket material: Silicone rubber
- Spring material: Stainless steel
- Axes material: Nickel-plated brass
- Maximum operating temperature: 100°C
- Watertightness: IP61 according to IEC 60529

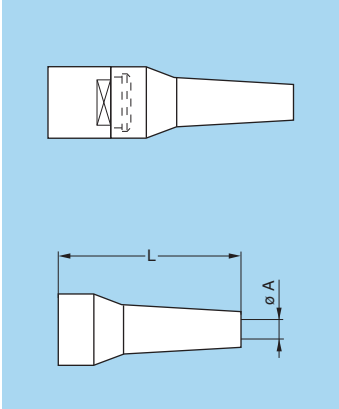

GM● Bend relief (Polyurethane)

A bend relief made from thermoplastic polyurethane elastomer (Desmopan 786) can be fitted over LEMO plugs and sockets that are supplied with nut for fitting such bend relief. They are available in nine different colours that match with the GRA insulating washers (see page 144).
Use the part numbers shown below to order this accessory separately.

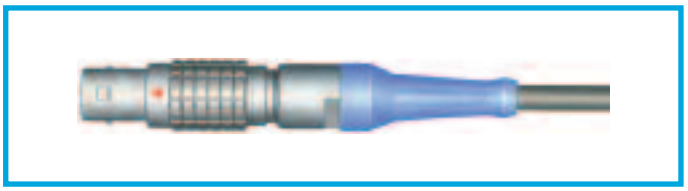

Main characteristics

- Material: Polyurethane elastomer
- Temperature range in dry atmosphere: -40°C +80°C

Part number	Dimensions (mm)				Series
	Bend relief		Cable ø		
	A	L	max.	min.	
GMA.00.012.DG	1.2	22	1.4	1.1	00
GMA.00.018.DG	1.8	22	2.1	1.8	
GMB.00.025.DG	2.5	22	2.8	2.5	
GMB.00.028.DG	2.8	22	3.1	2.8	
GMB.00.032.DG	3.2	22	3.5	3.2	
GMD.00.025.DG	2.5	22	2.8	2.5	
GMD.00.028.DG	2.8	22	3.1	2.8	
GMD.00.032.DG	3.2	22	3.5	3.2	
GMA.0B.025.DG	2.5	24	2.9	2.5	0B
GMA.0B.030.DG	3.0	24	3.4	3.0	
GMA.0B.035.DG	3.5	24	3.9	3.5	0S
GMA.0B.040.DG	4.0	24	4.4	4.0	
GMA.0B.045.DG	4.5	24	5.2	4.5	0E-0K-0L
GMA.1B.025.DG	2.5	30	2.9	2.5	1B-1D
GMA.1B.030.DG	3.0	30	3.4	3.0	
GMA.1B.035.DG	3.5	30	3.9	3.5	
GMA.1B.040.DG	4.0	30	4.4	4.0	1S
GMA.1B.045.DG	4.5	30	4.9	4.5	
GMA.1B.054.DG	5.4	30	6.0	5.4	1E-1K-1L
GMA.1B.065.DG	6.5	30	7.0	6.5	

Part number	Dimensions (mm)				Series
	Bend relief		Cable ø		
	A	L	max.	min.	
GMA.2B.040.DG	4.0	36	4.5	4.0	2B
GMA.2B.045.DG	4.5	36	5.0	4.5	
GMA.2B.050.DG	5.0	36	5.5	5.0	2S
GMA.2B.060.DG	6.0	36	6.5	6.0	2E-2K-2L
GMA.2B.070.DG	7.0	36	7.7	7.0	
GMA.2B.080.DG	7.8	36	8.8	7.8	2C-2G
GMA.3B.050.DG	4.5	42	5.2	4.5	3S
GMA.3B.060.DG	6.0	42	6.9	6.0	3B
GMA.3B.070.DG	7.0	42	7.9	7.0	
GMA.3B.080.DG	8.0	42	8.9	8.0	3E-3K
GMA.3B.090.DG	9.0	42	10.0	9.0	4S
GMA.4B.080.DG	8.0	60	9.0	8.0	4S
GMA.4B.010.DG	10.0	60	10.9	10.0	4B
GMA.4B.011.DG	11.0	60	11.9	11.0	
GMA.4B.012.DG	12.0	60	13.0	12.0	4E-4K
GMA.4B.013.DG	13.5	60	14.5	13.5	

Note: The «GMD» are thin bend reliefs (for very flexible cables).
The last letter «G» of the part number indicates the grey colour of the bend relief. For ordering a bend relief with another colour, see table on page 142 and replace the letter «G» by the letter of the required colour.
See also detailed information for each series: B series on page 54: K series on page 54; S series on page 107; E series on page 107.

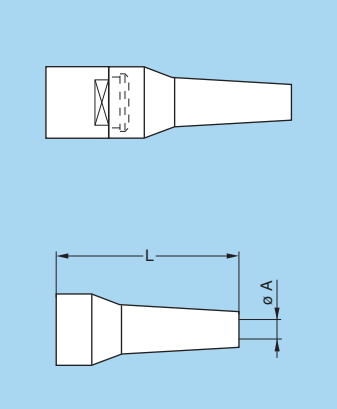

GMA Bend relief (Silicone)

A bend relief has been designed for connectors used in applications at high temperature or requiring vapour sterilization.
These bend reliefs are different from previous ones as for their material, a silicone elastomer which is noted for its retention of flexibility over a wide temperature range. They are available in nine colours.
Use the part numbers shown below to order this accessory separately.

Main characteristics

- Material: Silicone elastomer VMQ
- Temperature range in dry atmosphere: -60°C +200°C
- Temperature range in water steam: +140°C

Part number	Dimensions (mm)				Series
	Bend relief		Cable ø		
	A	L	max.	min.	
GMA.0B.025.RG	2.5	27	2.9	2.5	0B
GMA.0B.030.RG	3.0	27	3.4	3.0	
GMA.0B.035.RG	3.5	27	3.9	3.5	0S
GMA.0B.040.RG	4.0	27	4.4	4.0	
GMA.0B.045.RG	4.5	27	5.2	4.5	0E-0K-0L
GMA.1B.025.RG	2.5	34	2.9	2.5	1B-1D
GMA.1B.030.RG	3.0	34	3.4	3.0	
GMA.1B.035.RG	3.5	34	3.9	3.5	
GMA.1B.040.RG	4.0	34	4.4	4.0	1S
GMA.1B.045.RG	4.5	34	5.0	4.5	
GMA.1B.051.RG	5.1	34	5.6	5.1	
GMA.1B.057.RG	5.7	34	6.2	5.7	1E-1K-1L
GMA.1B.063.RG	6.3	34	7.0	6.3	

Part number	Dimensions (mm)				Series
	Bend relief		Cable ø		
	A	L	max.	min.	
GMA.2B.040.RG	4.0	41	4.4	4.0	2B
GMA.2B.045.RG	4.5	41	5.0	4.5	
GMA.2B.051.RG	5.1	41	5.6	5.1	2S
GMA.2B.057.RG	5.7	41	6.2	5.7	
GMA.2B.063.RG	6.3	41	7.0	6.3	2E-2K-2L
GMA.2B.071.RG	7.1	41	7.9	7.1	2C-2G
GMA.2B.080.RG	8.0	41	9.0	8.0	

Note: the last letter «G» of the part number indicates the grey colour of the bend relief. For ordering a bend relief with another colour, see table on page 142 and replace the letter «G» by the letter of the required colour.
See also detailed information for each series: B series on page 54: K series on page 54; S series on page 107; E series on page 107.

Note: the selection of pigments, which should remain stable at high temperature, is limited by the new regulations. For this reason, some colours will be a shade different from those used for Desmopan bend reliefs. The selected solutions represent the best possible compromise.

Ref.	Colour
A	blue
B	white
G	grey
J	yellow
M	brown

Ref.	Colour
N	black
R	red
S	orange
V	green

GM● Overall bend relief for plugs and sockets

Overall bend reliefs, type GMF for plugs and GMP for sockets offer optimum protection against mechanical damage and give a protection index of IP65 according to IEC 60529 (mated position). These bend reliefs slide easily over the connector shell and are positioned by slightly pressing the bend relief backnut.
The special design of the bend relief for plug provides for easy use of the push-pull self-latching system.

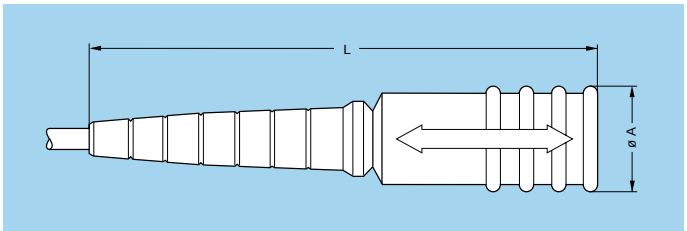

GMF Bend relief for straight plug

Part number	Series	Dimensions (mm)			
		Bend relief		Cable ø	
		A	L	max.	min.
GMF.0B.035.060EN	0S-0B	11.0	60.5	3.5	1.0
GMF.1B.062.072EN	1S-1B	16.0	72.0	6.2	2.5
GMF.2B.082.095EN	2S-2B	22.0	95.0	8.2	5.0

- Material: Elastomer rubber black colour
- Operating temperature: -30°C to +120°C

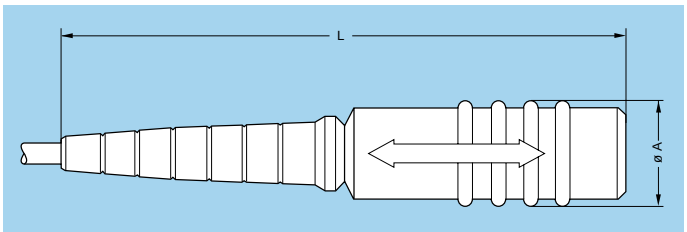

GMP Bend relief for free socket

Part number	Series	Dimensions (mm)			
		Bend relief		Cable ø	
		A	L	max.	min.
GMP.0B.035.069EN	0S-0B	11.0	69.0	3.5	1.0
GMP.1B.062.079EN	1S-1B	16.0	80.0	6.2	2.5
GMP.2B.082.102EN	2S-2B	21.0	102.5	8.2	5.0

- Material: Elastomer rubber black colour
- Operating temperature: -30°C to +120°C

– The overall bend relief shall be installed over plug or free socket fitted with a nut for bend relief.
– The typical applications are shown below.
– The overall bend relief can be cut at different length depending on cable diameter.

Plug-free socket

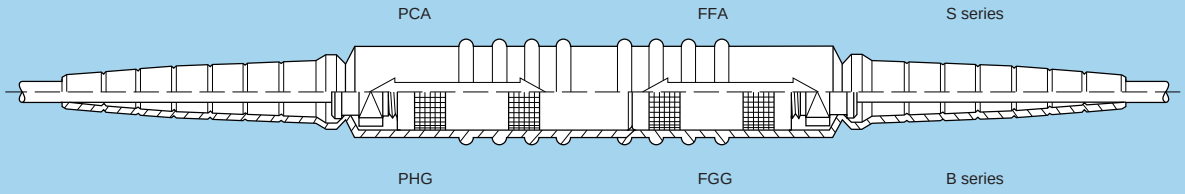

Plug-fixed socket

Optimum protection is offered only when using front panel mounting fixed sockets

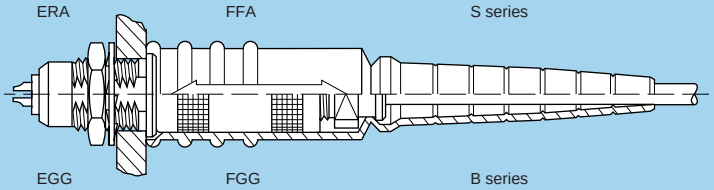

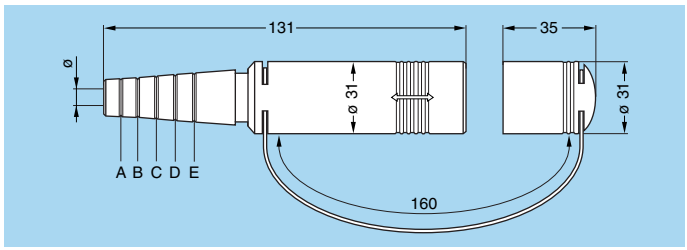

GMF Bend relief with cap for plug

Part number	Series	For models	Cut	admissible ø (mm) min.	admissible ø (mm) max.
GMF.4K.080.EANZ	4E	FFA	–	8.0	8.9
			A	9.0	9.9
			B	10.0	11.4
	4K	FGG	C	11.5	12.9
			D	13.0	14.9
			E	15.0	16.5

- Material: Black EPDM

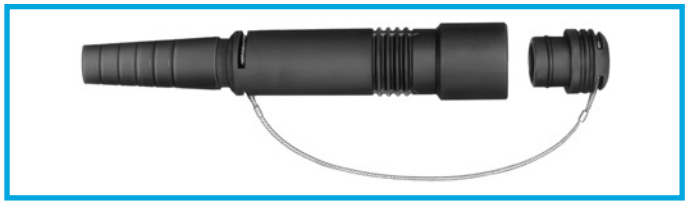

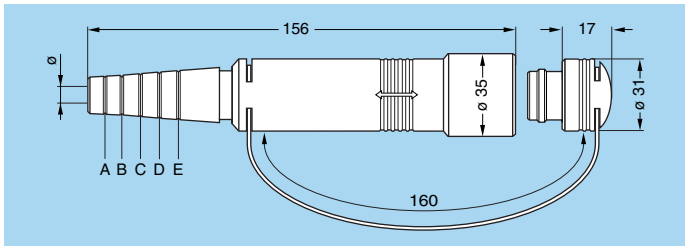

GMP Bend relief with cap for free socket

Part number	Series	For models	Cut	admissible ø (mm) min.	admissible ø (mm) max.
GMP.4K.080.EANZ	4E	PCA	–	8.0	8.9
			A	9.0	9.9
			B	10.0	11.4
	4K	PHG	C	11.5	12.9
			D	13.0	14.9
			E	15.0	16.5

- Material: Black EPDM

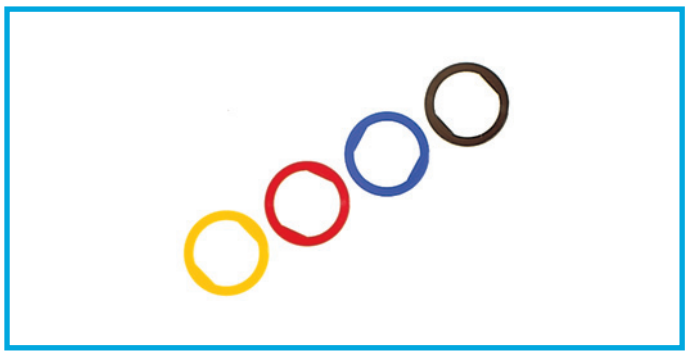

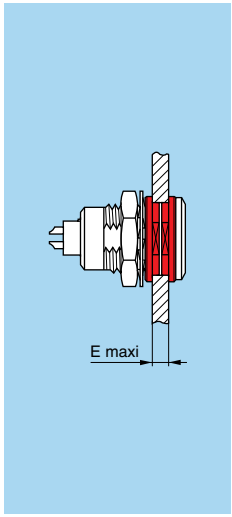

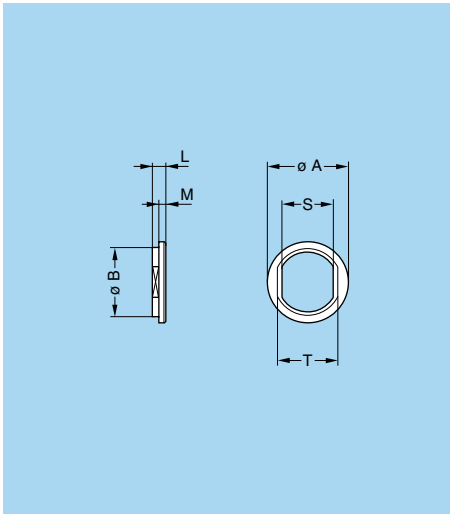

- Material: Polyamide
- Maximum operating temperature: 90° C

GRA Insulating washers

Sockets or plugs mounted on panels can be fitted with insulating washers. The nine colours available combined with those for the bend reliefs makes colour coding possible.

Part number	Series	Dimensions (mm) A	B	E	L	M	S	T
GRA.00.269.GG	00	10.0	8.8	4.5	1.8	1.0	6.4	8.0
GRA.0S.269.GG	0S-0B	12.0	10.8	6.0	1.8	1.0	8.3	9.9
GRA.1S.269.GG	1S-1B	16.0	13.8	6.5	1.8	1.0	10.6	12.2
GRA.2S.269.GG	2S-2B	21.1	17.9	7.3	2.3	1.3	13.6	16.2
GRA.3S.269.GG	3S-3B	25.0	21.8	10.3	2.2	1.2	16.7	20.2
GRA.4S.269.GG	4S-4B	31.9	28.7	10.5	2.5	1.5	23.6	27.1

Note: insulating washers for series 5B are available on request.

Caution: these insulating washers can be used with fixed and free sockets with across flat dimension S1 equivalent to the S dimension of the washer.

Ref.	Colour	Ref.	Colour
A	blue	N	black
B	white	R	red
G	grey	S	orange
J	yellow	V	green
M	brown		

Note: the last letter «G» of the part number indicates the colour grey for the insulating washer. To obtain an insulating washer of another colour, refer to the table above and change the letter «G» of the part number to the corresponding letter of the colour required.
For the panel cut-out, please consult chapter «Panel cut-out» on page 153.

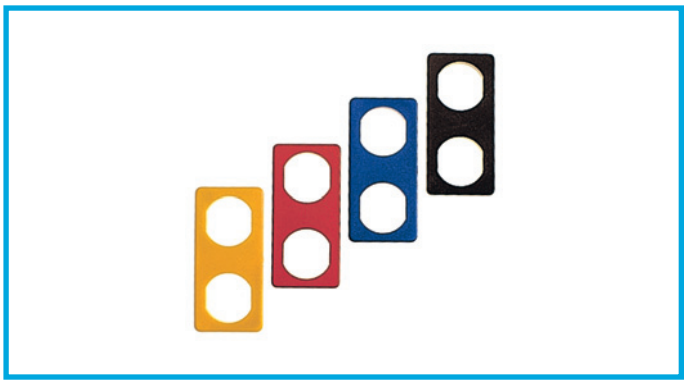

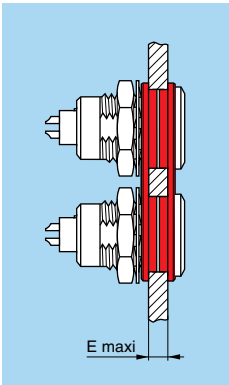

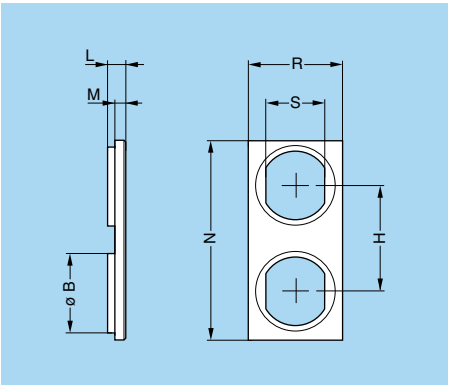

- Material: Polyamide
- Maximum operating temperature: 90° C

GRC Double panel washers

Double panel washers have been designed to make the drilling of panel holes easier for mounting fixed and free sockets. The combination of the nine different colours of the double panel washers and of the bend reliefs makes colour coding possible.

Part number	Series	Dimensions (mm)							
		B	E	H	L	M	N	R	S
GRC.0S.260.HG	0S-0B	10.9	5	14	2.5	1.5	26.5	12.5	8.3
GRC.1B.260.HG	1S-1B	13.9	5	20	3.3	1.8	34.5	14.5	10.6

Caution: these double panel washers can be used with fixed or free sockets with across flat dimension S1 equivalent to the S dimension of the washer.

Ref.	Colour
A	blue
B	white
G	grey
J	yellow
M	brown

Ref.	Colour
N	black
R	red
S	orange
V	green

Note: the last letter «G» of the washer's part number indicates the colour grey. For other colours, refer to the above table and replace letter «G» by the one corresponding to the colour required.
For the panel cut-out, please consult chapter «Panel cut-out» on page 153.

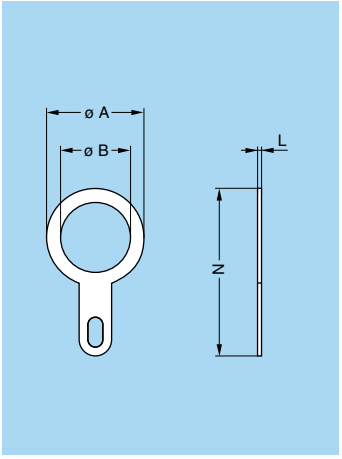

- Material: CuSnZn plated brass (2 µm)

GCA Earthing washer

Part number	Series	Dimensions (mm)			
		A	B	L	N
GCA.00.255.LT	00	9.5	7.1	0.4	18.2
GCA.0S.255.LT	0S-0B	13.0	9.1	0.4	22.0
GCA.0E.255.LT	0E-0K	17.0	14.1	0.5	27.5
GCA.1S.255.LT	1S-1B	17.0	12.2	0.5	27.5
GCA.1E.255.LT	1E-1K	20.0	16.2	0.5	32.0
GCA.2S.255.LT	2S-2B	20.0	15.2	0.5	32.0
GCA.2E.255.LT	2E-2K	25.0	20.2	0.5	39.0
GCA.3S.255.LT	3S-3B	25.0	18.2	0.5	39.0
GCA.4S.255.LT	4S-4B	35.0	25.6	0.6	50.0
GCA.4E.255.LT	4E-4K	35.0	30.6	0.6	50.0
GCA.5S.255.LT	5S-5B	42.0	35.1	0.3	57.5

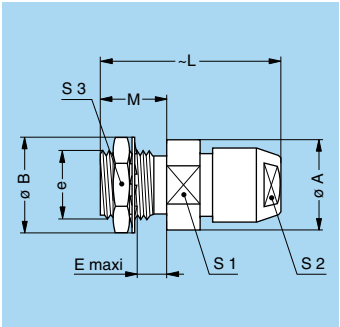

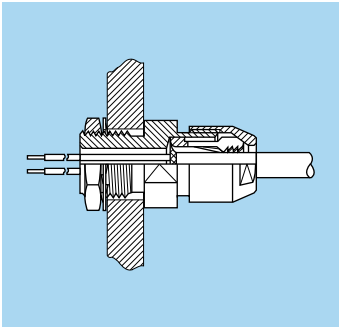

GSC Lead-through with cable collet

Part number	Dimensions (mm)								
	A	B	e	E	L	M	S1	S2	S3
GSC.00.290.CD●●	6.5	8.1	M5x0.5	1.5	16	4.0	5	6	7
GSC.1S.290.ND●●	12.0	12.5	M9x0.6	5.0	26	7.5	11	9	11
GSC.3S.290.ND●●	17.0	19.5	M15x1.0	8.1	30	12.0	–	14	17

Note: ●● = collet cable diameter of the B series. For cable diameter refer to page 52.
The cable collet system stands for both screened and unscreened cables. It can be delivered with a nut for fitting a bend relief it you add a «Z» at the end of the part number.

Tooling

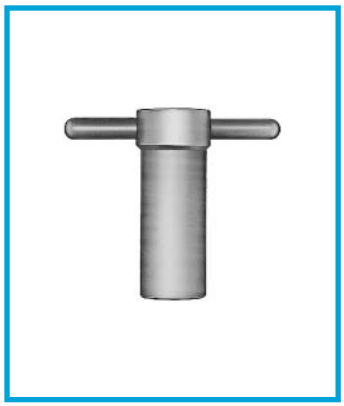

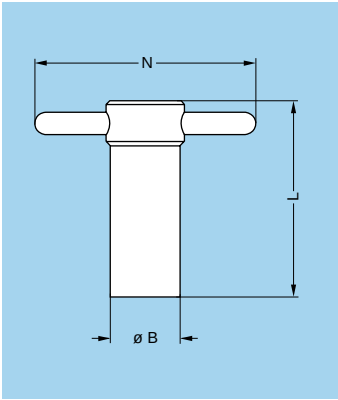

DCG Spanners for hexagonal nuts

Part number	Dimensions (mm)			Part number of the nut
	B	L	N	
DCG.91.149.0TN	14	40	50	GEA.00.240.LN
DCG.91.161.1TN	16	45	52	GEA.0S.240.LN
DCG.91.201.4TN	20	52	65	GEA.1S.240.LN
DCG.91.231.7TN	23	62	68	GEA.2S.240.LN
DCG.91.282.2TN	28	76	73	GEA.3S.240.LN

- Material: blackened steel

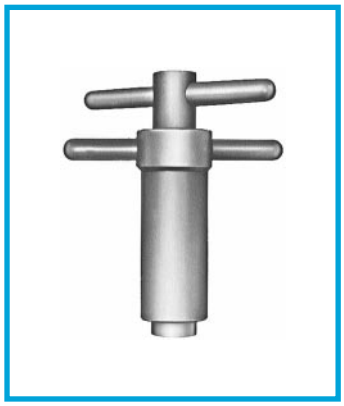

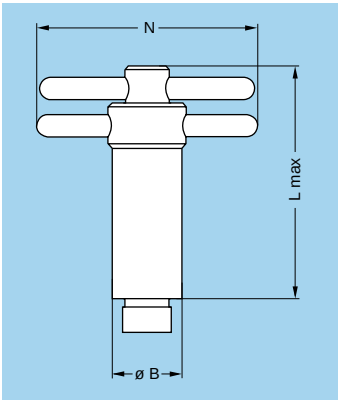

DCA Spanners for hexagonal nuts with locator for flats on socket thread

Part number	Dimensions (mm)			Part number of the nut
	B	L	N	
DCA.91.149.0TN	14	65	50	GEA.00.240.LN
DCA.91.161.1TN	16	73	52	GEA.0S.240.LN
DCA.91.201.4TN	20	85	65	GEA.1S.240.LN
DCA.91.231.7TN	23	100	68	GEA.2S.240.LN
DCA.91.282.2TN	28	120	73	GEA.3S.240.LN

- Material: blackened steel

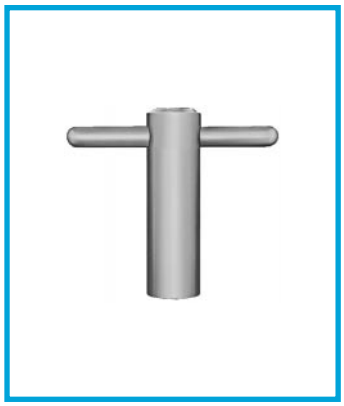

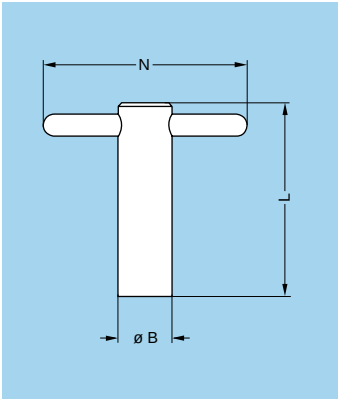

DCB Spanners for round nuts

Part number	Dimensions (mm)			Part number of the nut
	B	L	N	
DCB.91.119.0TN	11	40	50	GEB.00.240.LN
DCB.91.131.1TN	13	45	50	GEB.0S.240.LN
DCB.91.161.4TN	16	52	65	GEB.1S.240.LN
DCB.91.201.8TN	20	62	65	GEB.2S.240.LN
DCB.91.242.2TN	24	76	70	GEB.3S.240.LN

- Material: blackened steel

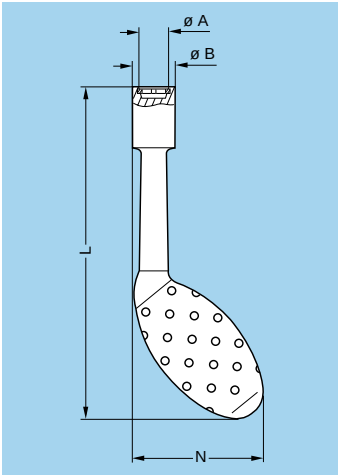

DCH Spanners for conical nut

Part number	Dimensions (mm)				Part number of the nut
	A	B	L	N	
DCH.91.101.PN	10.1	12.8	124	48.3	GEC.00.240.LC
DCH.91.121.PN	12.1	14.8	124	49.3	GEC.0S.240.LC
DCH.91.161.PN	16.1	21.0	124	51.9	GEC.1S.240.LC
DCH.91.201.PN	20.1	22.8	129	53.5	GEC.2S.240.LC

- Material: dark grey polyurethane

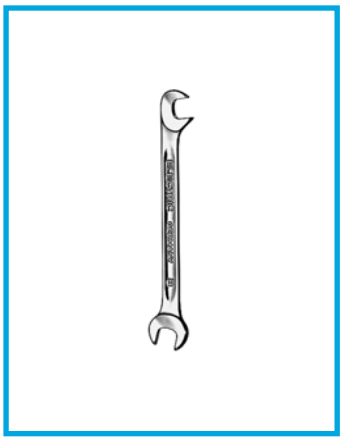

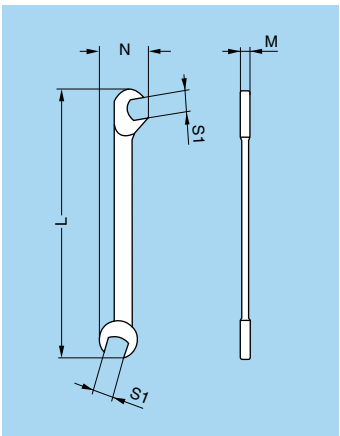

DCP Flat spanners for collet nut

Part number	Dimensions (mm)			
	L	M	N	S1
DCP.99.040.TC	70	0.95	10.5	4.0
DCP.99.045.TC	70	2.00	10.5	4.5
DCP.99.050.TC	78	2.00	12.6	5.0
DCP.99.055.TC	78	2.00	12.6	5.5
DCP.99.060.TC	78	2.00	12.6	6.0

- Material: chrome-plated steel

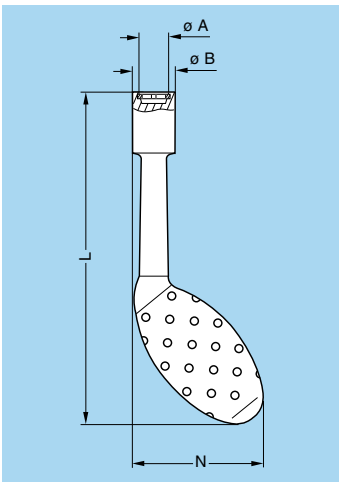

DCH Spanners for notched nuts

Part number	Dimensions (mm)				Part number of the nut
	A	B	L	N	
DCH.91.101.PA	10.1	12.8	124	48.3	GEG.00.240.LC
DCH.91.121.PA	12.1	14.8	124	49.3	GEG.0S.240.LC
DCH.91.181.PA	18.1	22.8	129	53.1	GEG.0E.240.LC
DCH.91.161.PA	16.1	21.0	124	51.2	GEG.1S.240.LC
DCH.91.201.PA	20.1	22.8	129	53.5	GEG.1E.240.LC
DCH.91.141.PA	14.1	18.6	124	51.2	GEG.1S.242.LC
DCH.91.201.PA	20.1	22.8	129	53.5	GEG.2S.240.LC
DCH.91.241.PA	24.1	30.8	134	52.6	GEG.2S.241.LC
DCH.91.251.PA	25.1	32.8	134	55.5	GEG.2E.240.LC

- Material: blue polyurethane

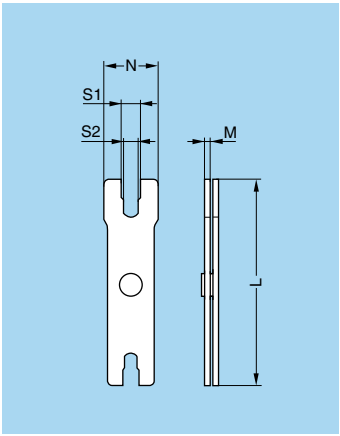

DCP Set of flat spanners for collet nuts

Part number	Series	Dimensions (mm)				
		L	M	N	S1	S2
DCP.91.001.TN	0B	95	2.5	21	8.1	7.1
	1B	95	2.5	25	10.1	9.1
DCP.91.023.TN	2B-2K	115	3.0	30	13.1	12.1
	3B-3K	115	3.0	35	15.1	14.1
DCP.91.045.TN	4B	130	3.5	40	21.2	20.2
	5B	130	3.5	45	31.2	30.2

- Material: blackened steel

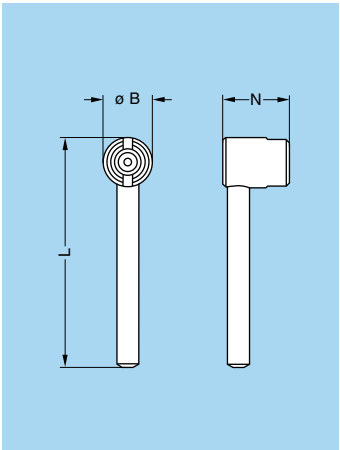

DCL Spanners for assembling plugs with 2 latches

Part number	Series	Dimensions (mm)		
		B	L	N
DCL.91.105.0TK	00	10	45	13.5
DCL.91.127.0TK	0S	12	47	17.0
DCL.91.149.0TK	1S	14	52	19.0

- Material: blackened steel

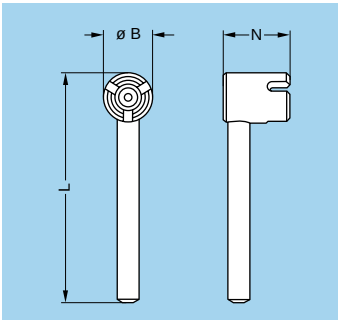

DCN Spanners for assembling plugs with 3 latches

Part number	Series	Dimensions (mm)		
		B	L	N
DCN.91.905.0TK	00	9	42	12
DCN.91.125.0TK	0S	12	47	17
DCN.91.149.0TK	1S	14	53	19
DCN.91.171.2TK	2S-2C	17	63	20
DCN.91.201.5TK	3S	20	74	22

- Material: blackened steel

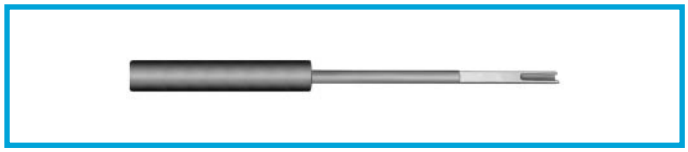

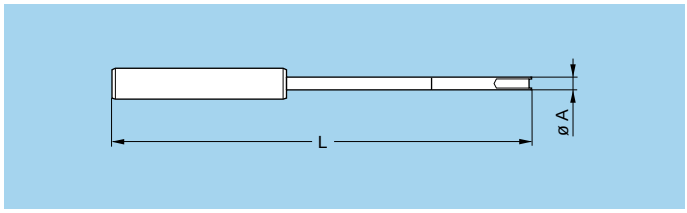

DCL Assembly tool for FVB.00.303.NLA plugs

Part number	Series	Dim. (mm)	
		A	L
DCL.91.516.5TK	00	5	165

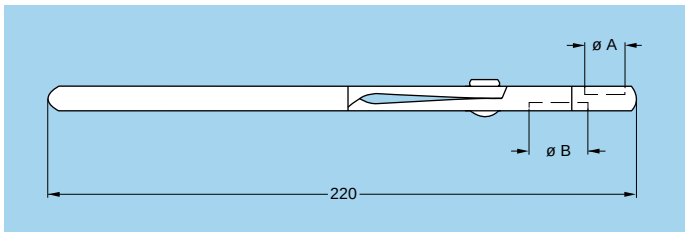

DPF Pliers for assembling plugs (series K, E and L)

Part number	Series	Dimensions (mm)	
		A	B
DPF.91.001.TA	0E-0K-0L	10	–
	1E-1K-1L	–	12
DPF.91.023.TA	2E-2K-2L	15	–
	3E-3K	–	18

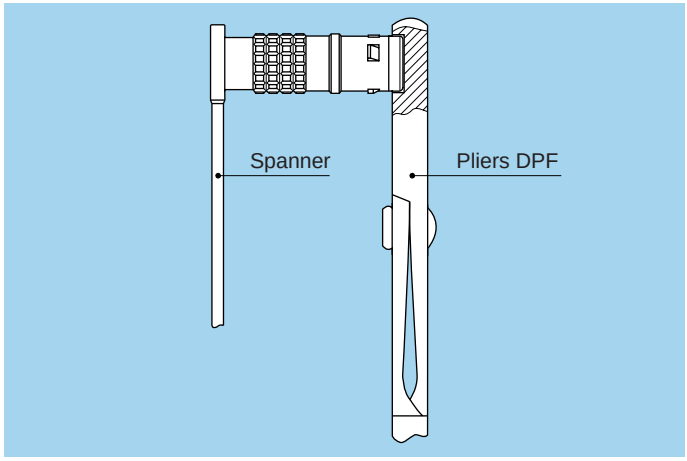

Example for use

The plug end must be held in the pliers whilst the nut is tightened with the flat spanner.

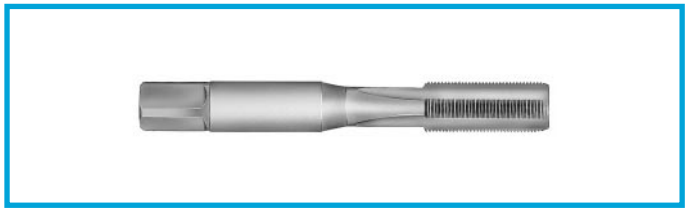

DTA Taps

Part number	Series	Thread
DTA.99.700.5Z	00	M7 x 0.5
DTA.99.900.6Z	0S-0B	M9 x 0.6

Crimping tools for electrical contacts

Fig. A

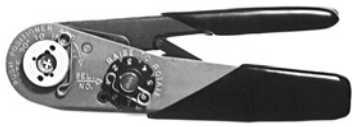

Fig. B

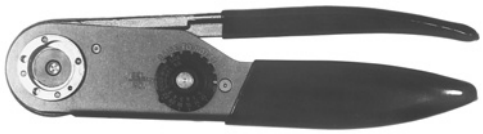

Manual crimping tools

Supplier	Part number		
	contact ø 0.5-0.7 0.9-1.3 (Fig. A)	contact ø 1.6-2.0 (Fig. B)	contact ø 3.0-4.0 (Fig. B)
LEMO	DPC.91.701.V[1)]	DPC.91.101.A[2)]	DPC.91.102.V
DANIELS	MH860[1)]	AF8[2)]	M300BT
ASTRO	616336[1)]	615708[2)]	–

[1)] According to specification MIL-C-22520/7-01.
[2)] According to specification MIL-C-22520/1-01.

Pneumatic crimping tools

Supplier	Part number
LEMO	DPC.91.701.C
BALMAR	85230
BUCHANAN	621101

According to specification MIL-C-22520/7-01.
For LEMO contacts ø 0.5-0.7-0.9-1.3 mm

male

female

These positioners are suitable for use with both manual and pneumatic crimping tools according to the MIL-C-22520/7-01 standard.

Fig. 1

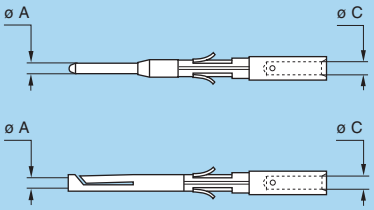

Fig. 2

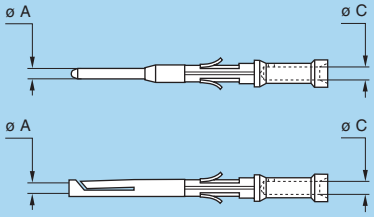

Note: a wide variation of strand number and diameter combinations are quoted as being AWG, some of which do not have a large enough cross section to guarantee a crimp as per either MIL-C-22520/1-01 or /7-01. Our technical department is at your disposal to study and propose a solution to all your applications.

Note: see table on page 51 for connector selection and the table on page 131 for contact selection.

DCE Positioners for crimp contacts ø 0.5-0.7-0.9 and 1.3 mm

	Connector + Contact					Positioners part number	
	Type	ø A	ø C	Fig.	Conductor AWG	For male contact	For female contact
00	302 303 304	0.5	0.45	1	28-30-32	DCE.91.050.0VC	DCE.91.050.0VM
0B 0K 0S	302[1)] 303	0.9	1.10	1	20-22-24	DCE.91.090.BVC	DCE.91.090.BVM
		0.9	0.80	2	22-24-26		
		0.9	0.45	2	28-30-32	DCE.91.090.AVC	DCE.91.090.AVM
	304[1)] 305	0.7	0.80	1	22-24-26	DCE.91.070.BVC	DCE.91.070.BVM
		0.7	0.45	2	28-30-32		
	306/307 309	0.5	0.45	1	28-30-32	DCE.91.050.BVC	DCE.91.050.BVM
1B 1K 1S	302[1)] 303	1.3	1.40	1	18-20	DCE.91.131.BVC	DCE.91.131.BVM
		1.3	1.10	2	20-22-24		
	304[1)] 305	0.9	1.10	1	20-22-24	DCE.91.091.BVC	DCE.91.091.BVM
		0.9	0.80	2	22-24-26		
	306/307 308	0.7	0.80	1	22-24-26	DCE.91.071.BVC	DCE.91.071.BVM
		0.7	0.45	2	28-30-32		
	310/314 316	0.5	0.45	1	28-30-32	DCE.91.051.BVC	DCE.91.051.BVM
2B 2K 2S	304/305 306[1)] 307	1.3	1.40	1	18-20	DCE.91.132.BVC	DCE.91.132.BVM
		1.3	1.10	2	20-22-24		
		1.3	0.80	2	22-24-26	DCE.91.132.CVC	DCE.91.132.CVM
	308/310	0.9	1.10	1	20-22-24	DCE.91.092.BVC	DCE.91.092.BVM
		0.9	0.80	2	22-24-26		
		0.9	0.45	2	28-30-32	DCE.91.092.AVC	DCE.91.092.AVM
	312/314 316/318 319	0.7	0.80	1	22-24-26	DCE.91.072.BVC	DCE.91.072.BVM
		0.7	0.45	2	28-30-32		

Note: [1)] only these types are available in S series.

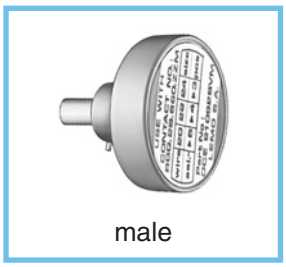

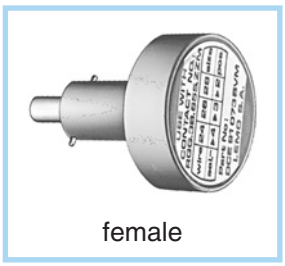

These positioners are suitable for use with both manual and pneumatic crimping tools according to the MIL-C-22520/7-01 standard.

DCE Positioners for crimp contacts 0.5-0.7-0.9 and 1.3 mm diameter

	Connector + Contact					Positioners part number	
	Type	ø A	ø C	Fig.	Conductor AWG	For male contact	For female contact
3B 3K	308/309 310	1.3	1.40	1	18-20	DCE.91.133.BVC	DCE.91.133.BVM
		1.3	1.10	2	20-22-24		
	312/314 316/318	0.9	1.10	1	20-22-24	DCE.91.093.BVC	DCE.91.093.BVM
		0.9	0.80	2	22-24-26		
	320/322 324/326 330	0.7	0.80	1	22-24-26	DCE.91.073.BVC	DCE.91.073.BVM
		0.7	0.45	2	28-30-32		
4B 4K	312	1.3	1.40	1	18-20	DCE.91.134.BVC	DCE.91.134.BVM
		1.3	1.10	2	20-22-24		
	316/320 324/330	0.9	1.10	1	20-22-24	DCE.91.094.BVC	DCE.91.094.BVM
		0.9	0.80	2	22-24-26		
	340/348	0.7	0.80	1	22-24-26	DCE.91.074.BVC	DCE.91.074.BVM
		0.7	0.45	2	28-30-32		
5B 5K	330/340 348	1.3	1.40	1	18-20	DCE.91.135.BVC	DCE.91.135.BVM
	350/354 364	0.9	1.10	1	20-22-24	DCE.91.095.BVC	DCE.91.095.BVM
		0.9	0.80	2	22-24-26		

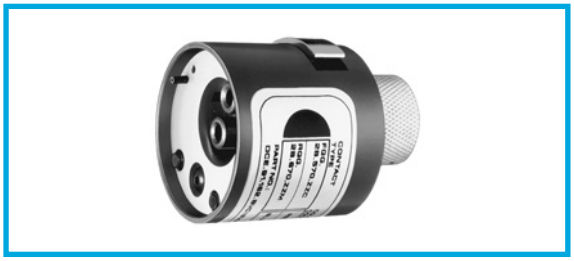

Note: these turrets can be used with manual crimping tool according to MIL-C-22520/1-01 standard.

DCE Turret for crimp contacts 1.6-2.0-3.0 and 4.0 mm diameter

	Connector + Contact					Positioners
	Type	ø A	ø C	Fig.	Conductor AWG	Part number
2B 2K	302	2.0	2.4	1	12-14-16	DCE.91.202.BVCM
		2.0	1.9	2	14-16-18	
	303	1.6	1.9	1	14-16-18	DCE.91.162.BVCM
		1.6	1.4	2	18-20-22	
3B 3K	302	3.0	2.9	1	10-12-14	DCE.91.303.BVCM
	303/304 309	2.0	2.4	1	12-14-16	DCE.91.203.BVCM
		2.0	1.9	2	14-16-18	
	305/306 307	1.6	1.9	1	14-16-18	DCE.91.163.BVCM
		1.6	1.4	2	18-20-22	
4B 4K	304	3.0	2.9	1	10-12-14	DCE.91.304.BVCM
	306/307	2.0	2.4	1	12-14-16	DCE.91.204.BVCM
		2.0	1.9	2	14-16-18	
	310	1.6	1.9	1	14-16-18	DCE.91.164.BVCM
		1.6	1.4	2	18-20-22	
5B 5K	304	4.0	4.0	1	10-12	DCE.91.405.BVCM
	310	3.0	2.9	1	10-12-14	DCE.91.305.BVCM
	314/316	2.0	2.4	1	12-14-16	DCE.91.205.BVCM
		2.0	1.9	2	14-16-18	
	320	1.6	1.9	1	14-16-18	DCE.91.165.BVCM
		1.6	1.4	2	18-20-22	

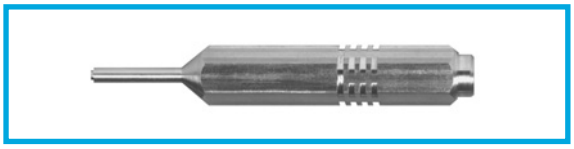

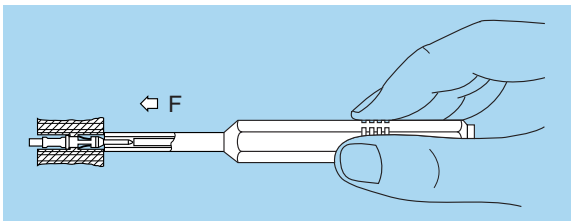

DCK Retention testing tools for crimp contacts 0.5-0.7-0.9 and 1.3 mm diameter

Contact ø A	Test force (N)	Testing tool part number	
		For male contact	For female contact
0.5	8	DCK.91.050.8LRC	DCK.91.050.8LRM
0.7	10	DCK.91.071.0LRC	DCK.91.071.0LRM
0.9	14	DCK.91.091.4LRC	DCK.91.091.4LRM
1.3	25	DCK.91.132.5LRC	DCK.91.132.5LRM

DCF Automatic extraction tools for crimp contacts (not valid for FA● and FW● models)

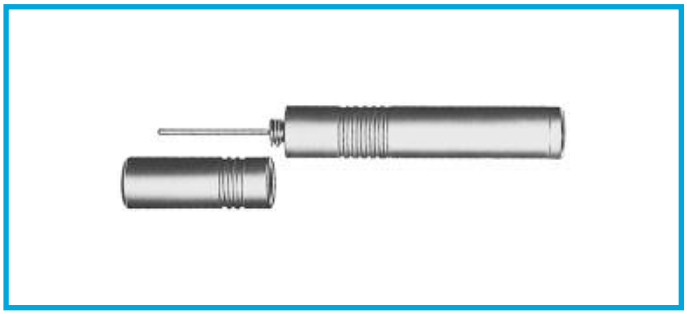

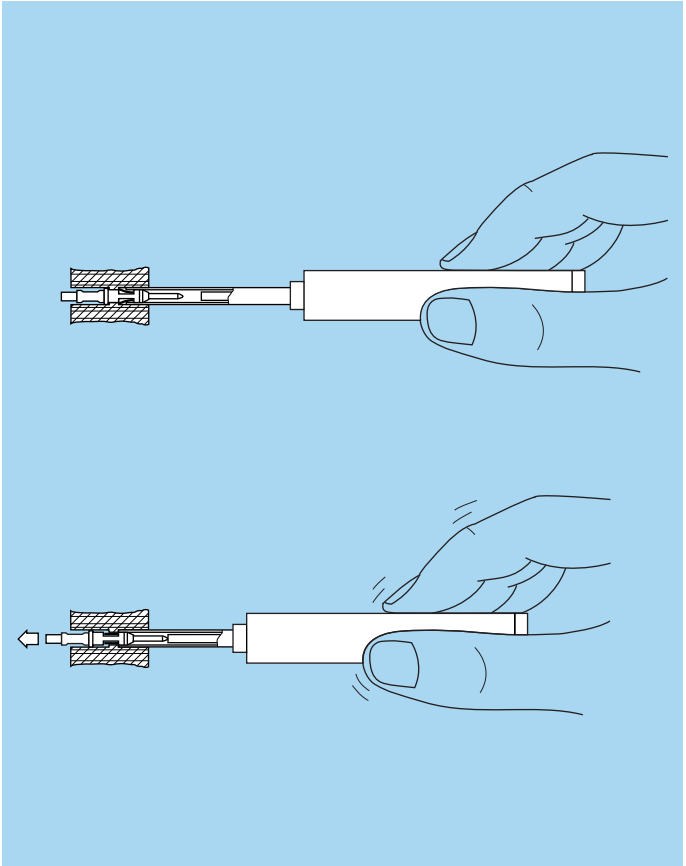

	Connector		Extractors part number
	Type	Contact ø A	For male and female contacts
00	302/303/304	0.5	DCF.91.050.2LT
0B 0K	302/303	0.9	DCF.91.090.2LT
	304/305	0.7	DCF.92.070.3LT
	306/307/309	0.5	DCF.91.050.2LT
1B 1K	302/303	1.3	DCF.91.131.2LT
	304/305	0.9	DCF.91.090.2LT
	306/307/308	0.7	DCF.91.070.2LT
	310/314/316	0.5	DCF.91.050.2LT
2B 2K	302	2.0	DCC.91.202.5LA [1]
	303	1.6	DCF.91.162.2LT
	304/305/306/307	1.3	DCF.91.131.2LT
	308/310	0.9	DCF.91.090.2LT
	312/314/316/318/319	0.7	DCF.91.070.2LT [2]
3B 3K	302	3.0	DCF.91.303.5LT
	303/304/309	2.0	DCC.91.202.5LA [1]
	305/306/307	1.6	DCF.91.163.5LT
	308/309/310	1.3	DCF.91.133.5LT
	312/314/316/318	0.9	DCF.91.093.5LT
	320/322/324/326/330	0.7	DCF.91.073.5LT
4B 4K	304	3.0	DCF.91.303.5LT
	306/307	2.0	DCC.91.202.5LA [1]
	310	1.6	DCF.91.163.5LT
	312	1.3	DCF.91.133.5LT
	316/320/324/330	0.9	DCF.91.093.5LT
	340/348	0.7	DCF.91.073.5LT
5B 5K	304	4.0	DCF.91.405.5LT
	310	3.0	DCF.91.303.5LT
	314/316	2.0	DCC.91.202.5LA [1]
	320	1.6	DCF.91.163.5LT
	330/340/348	1.3	DCF.91.133.5LT
	350/354/364	0.9	DCF.91.093.5LT

Note: [1] this model is thumb-operated. S Series available on request.
[2] For inverted contacts, please use DCF.92.070.3LT instead.

DCF Automatic extraction tools for crimp contacts (for FA● and FW● models)

	Contact ø A (mm)	Extractors part number For male and female contacts
0B/0K to 3B/3K	1.6	DCF.92.162.3LT
	1.3	DCF.92.131.3LT
	0.9	DCF.92.090.3LT
	0.7	DCF.92.070.3LT

Note: extractor for FA● of the 4B/4K and 5B/5K still need to be determinated.

Panel cut-outs

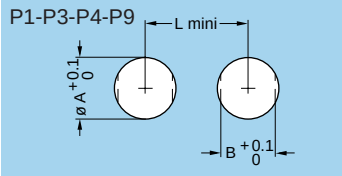

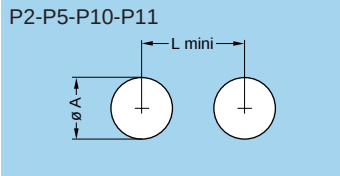

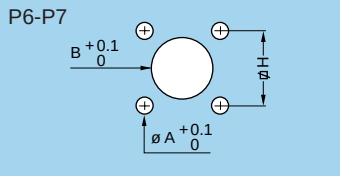

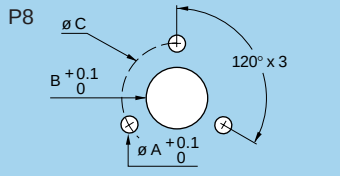

B series

Series	P1			P2		P3			P4			P5		P6			P8			P9			P10	
	ø A	B	L	ø A	L	ø A	B	L	ø A	B	L	ø A[2]	L	ø A	B	H	ø A	B	C	ø A	B	L	ø A	L
00	7.1	6.4	12.5	7.1	11.5	–	–	–	–	–	–	–	–	–	–	–	–	–	–	7.1	–	12	–	–
0B	9.1	8.3	14.5	9.1	13.5	14.1	12.6	20.1	10.1	9.1	15.0	8.30	10.5	–	–	–	–	–	–	9.1	8.3	15	–	–
1B	12.1	10.6	18.5	–	–	16.1	14.6	22.0	14.1	12.6	21.0	11.17	14.0	–	–	–	–	–	–	12.1	10.6	19	11.1	17
2B	15.1	13.6	22.5	–	–	19.2	17.1	28.0	16.1	15.1	23.0	13.95	18.0	–	–	–	–	–	–	15.1	13.6	23	–	–
3B	18.2	16.6	27.0	–	–	–	–	–	20.2	18.6	29.5	–	–	–	–	–	–	–	–	18.2	16.6	27	–	–
4B	25.2	23.6	36.0	–	–	–	–	–	25.2	23.6	36.1	–	–	–	–	–	–	–	–	25.2	23.6	36	–	–
5B	35.2[1]	33.6	44.0	–	–	–	–	–	35.2	33.6	47.1	–	–	3.3	35.2	34	2.8	35.2	47	35.2	33.6	47	–	–

Note:
[1] for using the tapered washer a round hole ø 36 mm apply. [2] tolerance: $^{+0.02}_{0}$

Cut-out types

Model	Type	Model	Type	Model	Type	Model	Type	Model	Type
ECG	P1	ENG	P1	HCG	P3	PFG	P1	YHG	P9
EEG	P1	ENY	P1	HEG	P9	PKG	P1		
EGG	P1	ESG	P1/P2	HGG	P9	R●●	P4		
EFG	P2	EXG	P2/P10	HHG	P9	S●●	P4/P9[3]		
EHG	P1	EYG	P1/P10	HMG	P9	XBG	P2		
EJG	P5	FAG	P1	HNG	P9	XPF	P2		
EKG	P1	FWG	P9	PEG	P1	XRB	P2		

Note: [3] in series 1B use P9.

Mounting nut torque

Series	Torque (Nm)	
	Metal shell	Plastic shell[4]
00	1.0	0.4
0B	2.5	0.4
1B	4.5	0.7
2B	6.0	0.8
3B	9.0	1.0
4B	12.0	5.0
5B	17.0	–

Note: [4] these values apply when metal shell are mounted with insulating washer.

S series

Series	P1			P2		P3			P4			P5		P6			P7			P10		P11	
	ø A	B	L	ø A	L	ø A	B	L	ø A	B	L	ø A[2]	L	ø A	B	H	ø A	B	H	ø A	L	ø A	L
00	7.1	6.4	12.5	7.1	11.5	–	–	–	–	–	–	–	–	–	–	–	–	–	–	–	–	–	–
0S	9.1	8.3	14.5	9.1	13.5	12.1	10.6	20.0	10.1	9.1	15	–	–	–	–	–	–	–	–	–	–	9.1	16
1S	12.1	10.6	18.5	12.1	19.0	14.1	12.6	21.0	12.1	10.6	18	11.92	15.5	3.3	12.1	12.7	2.7	11.1	12.4	11.1	17	12.1	19
2S	15.1	13.6	22.5	15.1	21.5	16.1	14.6	22.0	16.1	15.1	23	–	–	3.3	15.1	15.5	–	–	–	–	–	–	–
3S	18.2	16.6	27.0	18.2	27.0	20.2	18.6	30.0	20.2	18.6	29	–	–	3.3	18.2	18.0	–	–	–	–	–	–	–
4S	25.2	23.6	36.0	25.2	34.0	25.2	23.6	36.0	25.2	23.6	36	–	–	–	–	–	–	–	–	–	–	–	–
5S	35.2[1]	33.6	44.0	35.2	44.0	35.2	33.6	47.0	35.2	33.6	47	–	–	4.4	35.2	36.8	–	–	–	–	–	–	–
6S	48.3	45.6	58.0	48.3	58.0	48.3	45.6	60.0	48.3	45.6	60	–	–	–	–	–	–	–	–	–	–	–	–

Note:
[1] for using the tapered washer a round hole ø 36 mm apply. [2] tolerance: $^{+0.02}_{0}$

Cut-out types

Model	Type	Model	Type	Model	Type	Model	Type
EBC	P6	ERA	P1	EWB	P3	PSP	P1
EBD	P6	ERC	P1	FAA	P1/P2[3]	PSS	P1
EBS	P7	ERD	P1	HCP	P3[4]	RAD	P1/P2[5]
ECP	P1	ERN	P1	HGP	P3	SWH	P4
EEP	P1	ERS	P2	HGW	P11		
EHP	P2/P1	EXP	P2/P10	PSA	P1		

1 N = 0.102 kg

Note: [3] in series 6S use P2. [4] use only ø A in 1S series.
[5] in series 4S and 5S use P2.

Mounting nut torque

Series	Torque (Nm)	
	Metal shell	Plastic shell[6]
0S	2.5	0.4
1S	4.5	0.7
2S	6.0	0.8
3S	9.0	1.0
4S	12.0	5.0
5S	17.0	–
6S	22.0	–

Note: [6] these values apply when metal shell are mounted with insulating washer.

K series

Series	P1			P6			P7		
	ø A	B	L	ø A	B	H	ø A	B	H
0K	14.1	12.6	20.5	–	–	–	–	–	–
1K	16.1	14.6	22.5	–	–	–	–	–	–
2K	20.2	18.6	29.0	–	–	–	–	–	–
3K	24.2	22.6	35.5	3.5	22.6	20.6	3.5	23.1	23.0
4K	30.2	28.6	43.0	3.5	28.6	27.0	3.5	30.1	29.0
5K	45.2	42.6	57.0	4.5	42.6	38.0	4.5	45.1	44.0

Cut-out types

Model	Type	Model	Type	Model	Type
EBG	P7	EVG	P1	PEG	P1
EDG	P7[2)]	FAG	P1	PKG	P1
EEG	P1	FXG	P6	S●●	P1
EGG	P1	HEG	P1		
EHG	P1	HGG	P1		
ENG	P1	PBG	P7[3)]		

Mounting nut torque

Series	Torque (Nm)
0K	5
1K	7
2K	9
3K	12
4K	17
5K	22

1 N = 0.102 kg

Note: [2)] for this model dimension B = 18.1. [3)] for this model dimension B = 19.1.

E and L series

Series	P1			P6		
	ø A	B	L	ø A	B	H
0E-0L	14.1	12.6	20.5	–	–	–
1E-1L	16.1	14.6	22.5	–	–	–
2E-2L	20.2	18.6	29.0	2.9	15.1	11.8x20.4
3E	24.2	22.6	35.5	–	–	–
4E	30.2	28.6	43.0	–	–	–
5E	45.2	42.6	57.0	–	–	–
6E	55.3	52.1	68.0	–	–	–

Cut-out types E series

Model	Type	Model	Type
EBR	P6	HGP	P1
EEP	P1	PSA	P1
EHP	P1	PSP	P1
ERA	P1	SWH	P1
ERB	P1		
ERC	P1		
FAA	P1		

Cut-out types L series

Model	Type
EEG	P1
EGG	P1
FAG	P1
HGG	P1
PKG	P1

Mounting nut torque

Series	Torque (Nm)
0E-0L	5
1E-1L	7
2E-2L	9
3E	12
4E	17
5E	22
6E	27

1 N = 0.102 kg

Panel cut-out for mounting with insulating washer (S-B series)

GRA

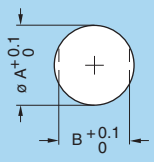

Series	Dim. (mm)	
	ø A	B
00	8.9	8.1
0S-0B	10.9	10.0
1S-1B	13.9	12.3
2S-2B	18.0	16.3
3S-3B	21.9	20.3
4S-4B	29.1	27.4

Panel cut-out for mounting with double panel washer (S-B series)

GRC

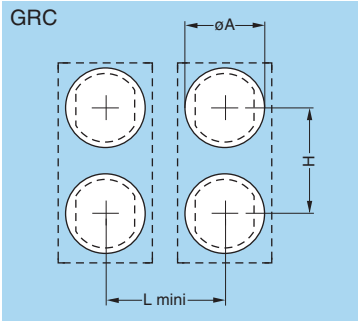

Series	Dimensions (mm)		
	ø A	H	L
0S-0B	11	14	13.5
1S-1B	14	20	17.0

Note: for nut tightening torques please refer to the corresponding series in the table on page 152.

PCB drilling pattern

Fixed socket with straight print contact (B-K series) P15

302

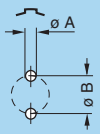

Series	Dimensions	
	A	B
00	0.6	1.2
0B-0K	0.8	2.2
1B-1K	0.8	2.8
2B-2K	0.8	4.4

303

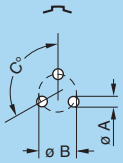

Series	Dimensions		
	A	B	C
00	0.6	1.35	120°
0B-0K	0.8	2.30	120°
1B-1K	0.8	3.00	120°
2B-2K	0.8	4.60	120°
3B-3K	0.8	5.60	120°

304

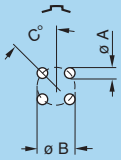

Series	Dimensions		
	A	B	C
00	0.6	1.6	45°
0B-0K	0.6	2.5	45°
1B-1K	0.8	3.1	45°
2B-2K	0.8	5.0	45°
3B-3K	0.8	6.2	45°

305

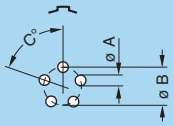

Series	Dimensions		
	A	B	C
0B-0K	0.6	2.8	72°
1B-1K	0.8	3.4	72°
2B-2K	0.8	5.2	72°
3B-3K	0.8	6.7	72°

306

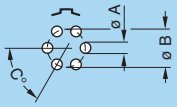

Series	Dimensions		
	A	B	C
0B-0K	0.6	3.0	60°
1B-1K	0.8	3.7	60°

306

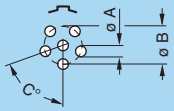

Series	Dimensions		
	A	B	C
2B-2K	0.8	5.6	72°
3B-3K	0.8	7.1	72°

307

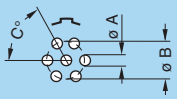

Series	Dimensions		
	A	B	C
0B-0K	0.6	3.00	60°
1B-1K	0.8	3.70	60°
2B-2K	0.8	5.80	60°
3B-3K	0.8	7.08	60°

308

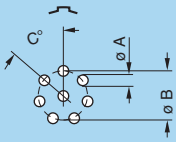

Series	Dimensions		
	A	B	C
1B-1K	0.8	3.8	51°26’

308

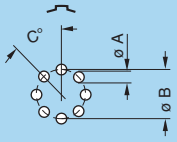

Series	Dimensions		
	A	B	C
2B-2K	0.8	6.4	45°
3B-3K	0.8	7.5	45°

309

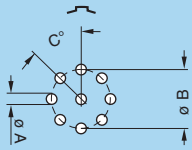

Series	Dimensions		
	A	B	C
0B-0K	0.6	3.2	45°
3B-3K	0.8	7.5	45°

310

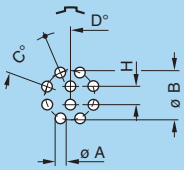

Series	Dimensions				
	A	B	C	D	H
1B-1K	0.6	3.95	45°	22°30'	1.40
2B-2K	0.8	6.30	45°	22°30'	2.15
3B-3K	0.8	7.90	45°	22°30'	2.80

312

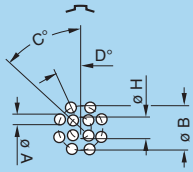

Series	Dimensions				
	A	B	C	D	H
2B-2K	0.8	6.50	45°	22°30’	2.80
3B-3K	0.8	8.20	45°	22°30’	3.40

314

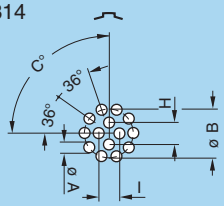

Series	Dimensions				
	A	B	C	H	I
1B-1K	0.6	4.4	90°	1.90	1.80
2B-2K	0.8	6.5	90°	2.65	2.65
3B-3K	0.8	8.2	90°	3.40	3.40

316

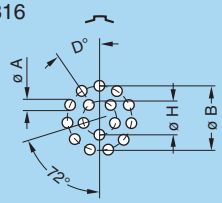

Series	Dimensions			
	A	B	D	H
1B-1K	0.6	4.4	32°44’	2.00

316

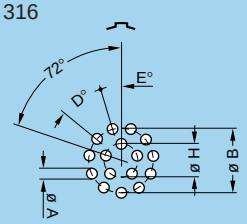

Series	Dimensions				
	A	B	D	E	H
2B-2K	0.8	6.6	32°44'	16°22'	3.10
3B-3K	0.8	8.4	32°44'	16°22'	3.86
4B-4K	0.6	10.5	32°44'	16°22'	5.00

318

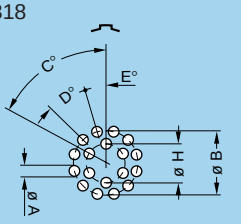

Series	Dimensions					
	A	B	C	D	E	H
2B-2K	0.8	6.7	60°	30°	15°	3.50
3B-3K	0.8	8.4	60°	30°	15°	4.34

319

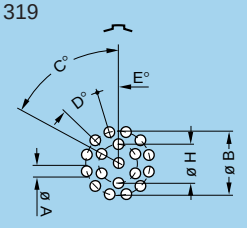

Series	Dimensions					
	A	B	C	D	E	H
2B-2K	0.8	6.7	60°	30°	15°	3.5

320

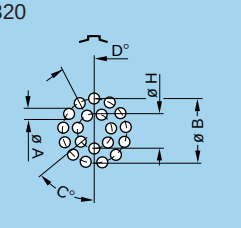

Series	Dimensions				
	A	B	C	D	H
3B-3K	0.6	8.62	51°26'	27°42'	4.78
4B-4K	0.6	11.00	51°26'	27°42'	6.00

322

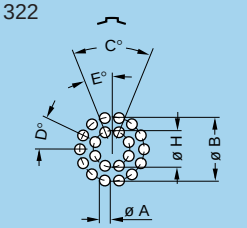

Series	Dimensions					
	A	B	C	D	E	H
3B-3K	0.6	8.8	45°	25°43'	22°30'	5

324

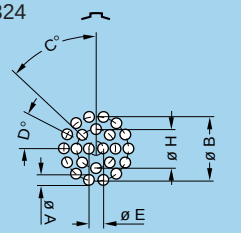

Series	Dimensions					
	A	B	C	D	E	H
3B-3K	0.6	8.8	45°	25°43'	1.8	5.30
4B-4K	0.6	11.1	45°	25°43'	2.2	6.65

2B-2K.326

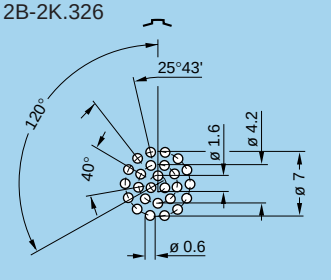

3B-3K.326

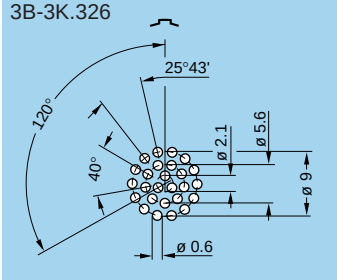

3B-3K.330

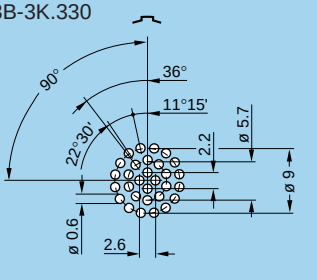

4B-4K.330

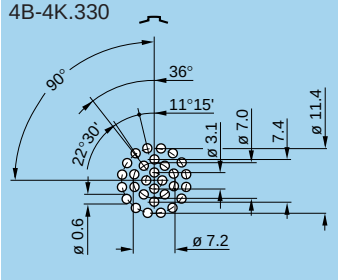

2B-2K.332

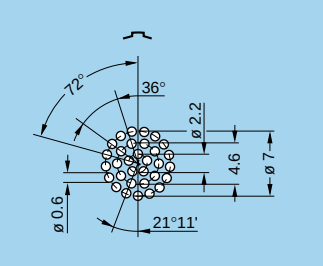

4B-4K.340

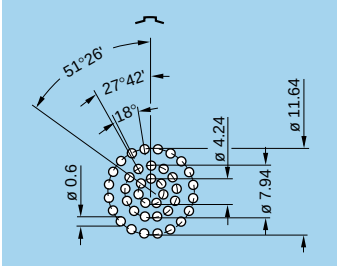

4B-4K.348

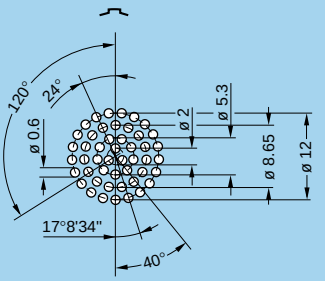

5B-5K.350

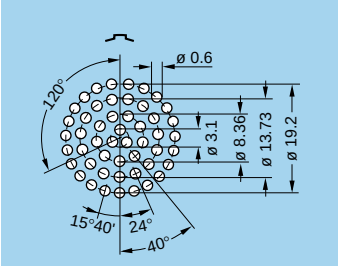

5B-5K.354

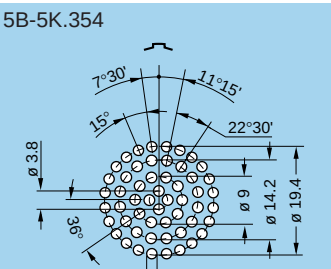

5B-5K.364

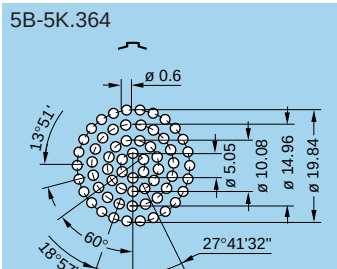

Note: all views are from the side of the socket.

Length of straight print contacts (for socket E●●)

	Type	Dimensions ø C	Dimensions L
00	302	0.5	3.0
	303	0.5	3.0
	304	0.5	3.0
0B 0K	302/303	0.7	3.2
	304/305	0.5	3.2
	306/307/309	0.5	3.2
1B 1K	302/303/304/305	0.7	3.0
	306/307/308	0.7	3.0
	310/314/316	0.5	4.0
2B 2K	302/303/304/305/306/307	0.7	3.0
	308/310/312/314/316/318/319	0.7	3.0
	326/332	0.5	3.0
3B 3K	303/304/305/306/307	0.7	3.0
	308/309/310/312/314/316/318	0.7	3.0
	320/322/324/326/330	0.5	5.0
4B 4K	316/320	0.5	5.0
	324/330	0.5	5.0
	340/348	0.5	5.0
5B 5K	348	0.7	5.0
	350	0.5	5.0
	354	0.5	5.0
	364	0.5	5.0

Length of straight print contacts (for socket EZG/EYG/XPF)

	Type	Models EZG/EYG ø C	Models EZG/EYG L	Models XPF ø C	Models XPF L
0B	302/303	0.7	4.5	–	–
	304/305	0.5	4.5	0.7	3.0
	306/307/309	0.5	3.0	–	–
1B	302/303/304/305	0.7	3.8	–	–
	306/307/308	0.7	3.8	–	–
	310/314/316	0.5	3.8	–	–
2B	302/303/304/305	0.7	5.5	–	–
	306/307/308/310	0.7	5.5	–	–
	312/314/316/318/319	0.7	5.5	–	–

E●●

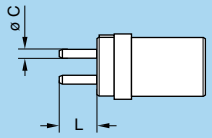

EZG/EYG/XPF

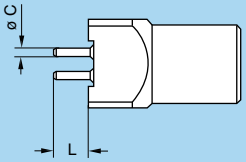

Note: This table does not apply for socket H●●; socket EH● and plugs FA●/FW●.

Fixed socket for printed circuit (B series) P16

Holes for fixing the housing

EYG-EZG

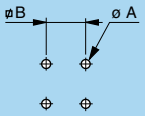

Series	Dimensions A	Dimensions B
00	0.8[1)]	5.08
0B	1.7[2)]	7.62
1B	1.7[2)]	7.62
2B	1.7[2)]	10.16

XPF.0B

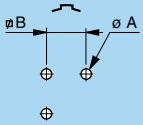

Series	Dimensions A	Dimensions B
0B	1.7	5.08

Note: Mounting torque for screws: 0.1 Nm.
[1)] to solder. [2)] to screw.

Fixed socket with elbow print contact (B-K series) P17

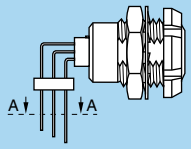

302

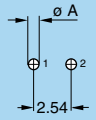

Series	Dim. A
00	0.6
0B-0K	0.7
1B-1K	0.9
2B-2K	0.9

303

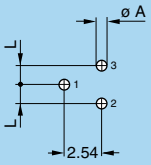

Series	Dim. A	Dim. L
00	0.6	1.27
0B-0K	0.7	1.27
1B-1K	0.9	1.27
2B-2K	0.9	2.54

304

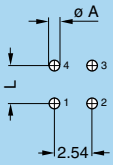

Series	Dim. A	Dim. L
00	0.6	2.54
0B-0K	0.7	2.54
1B-1K	0.7	2.54
2B-2K	0.9	3.50

0B-0K.305

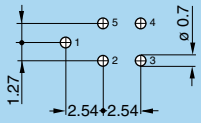

1B-1K.305

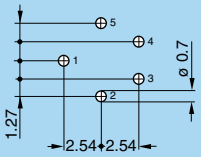

2B-2K.305

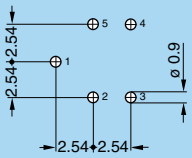

0B-0K / 1B-1K.306

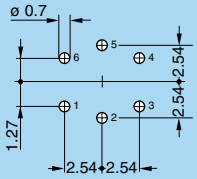

2B-2K / 3B-3K.306

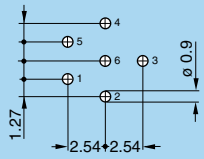

0B-0K / 1B-1K.307

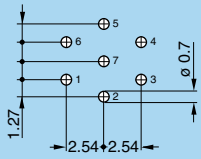

2B-2K.307

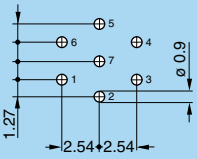

1B-1K.308

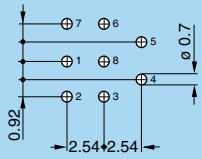

2B-2K / 3B-3K.308

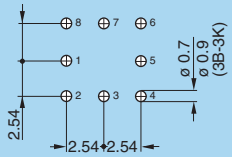

1B-1K / 2B-2K / 3B-3K.310

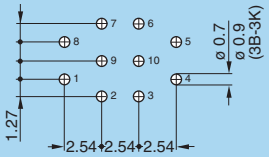

2B-2K / 3B-3K.312

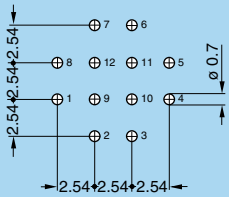

1B-1K / 2B-2K.314

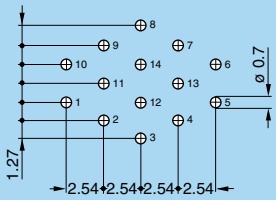

3B-3K.314

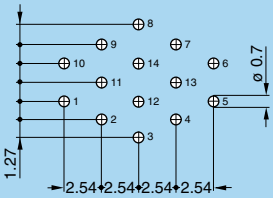

2B-2K / 3B-3K.316

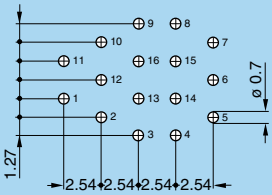

2B-2K.318

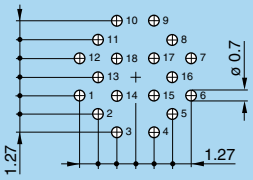

3B-3K.318

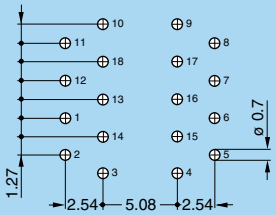

2B-2K.319

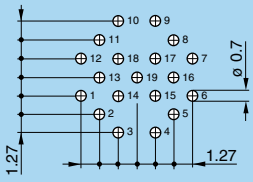

3B-3K.320

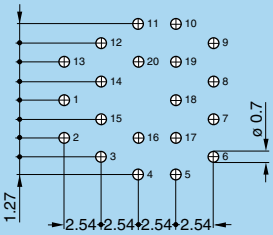

3B-3K.324

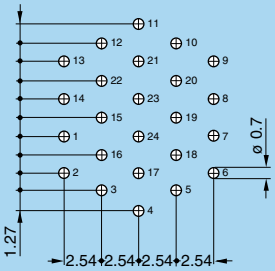

3B-3K.330

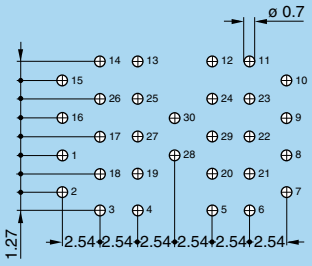

Elbow socket (90°) for printed circuit (B series) P18 P19 P20

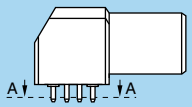

P18 - EPG.00.302 - XBG.00.302
XRB.00.302[1)]

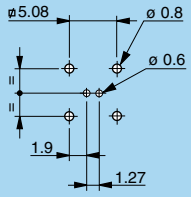

P18 - EPG.00.303[2)] - XBG.00.303[2)]
XRB.00.303[1)]

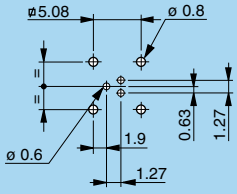

P18 - EPG.00.304 - XBG.00.304
XRB.00.304[1)]

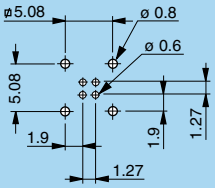

P19 - EPG-EXG (0B/1B.302)
Solder mount

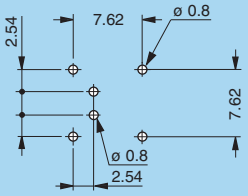

P19 - EPG-EXG (0B/1B.302)
Screw mount

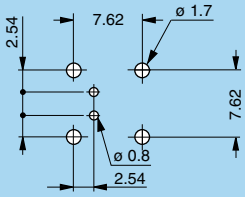

P19 - EPG-EXG (0B/1B.303)
Solder mount

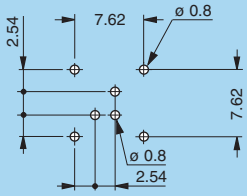

P19 - EPG-EXG (0B/1B.303)
Screw mount

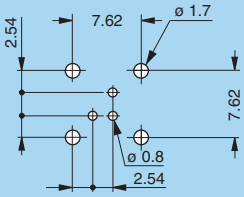

P19 - EPG-EXG (0B/1B.304)
Solder mount

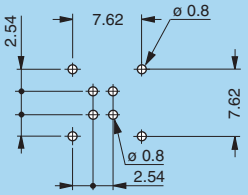

P19 - EPG-EXG (0B/1B.304)
Screw mount

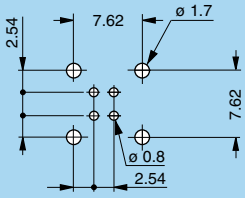

P19 - EPG-EXG (0B/1B.305)
Solder mount

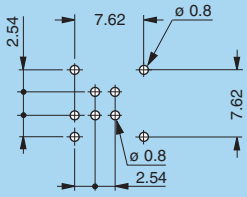

P19 - EPG-EXG (0B/1B.305)
Screw mount

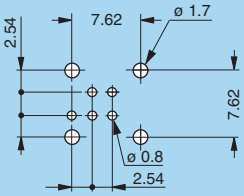

P19 - EPG-EXG (0B/1B.306)
Solder mount

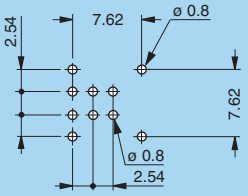

P19 - EPG-EXG (0B/1B.306)
Screw mount

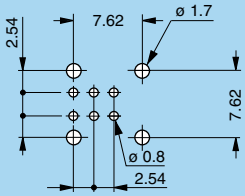

P19 - EPG-EXG (0B/1B.307)
Solder mount

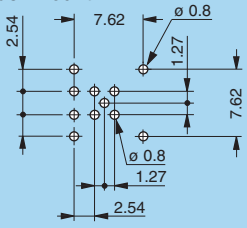

P19 - EPG-EXG (0B/1B.307)
Screw mount

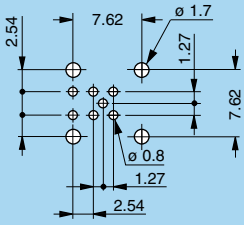

P19 - EPG-EXG (1B.308)
Solder mount

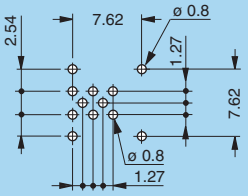

P19 - EPG-EXG (1B.308)
Screw mount

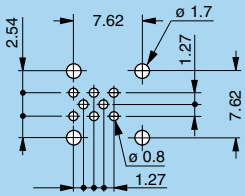

P19 - EPG-EXG (0B.309)
Solder mount

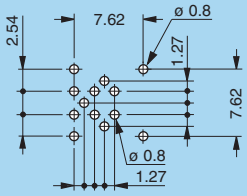

P19 - EPG-EXG (0B.309)
Screw mount

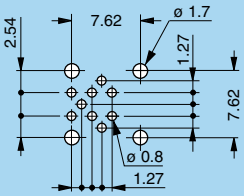

P19 - EPG-EXG (1B.310)
Solder mount

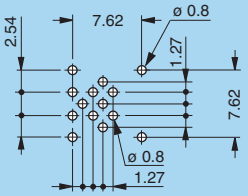

P19 - EPG-EXG (1B.310)
Screw mount

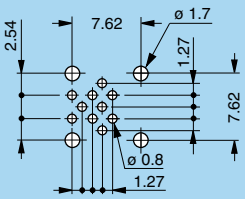

P20 - EPG.1B.314

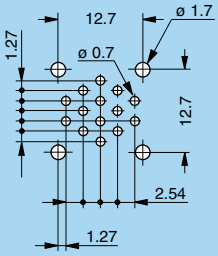

Note: [1)] for the XRB.00 series the holes for shell fixing are different (see p. 30).
[2)] the dimensions for the EPG.00.303.HLN and XBG.00.303.HLN models are given on page 23. For other models please contact factory.

Fixed socket with straight print contact (S-E series) P21

302

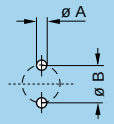

Series	Dimensions	
	A	B
0S-0E	0.6	2.2
1S-1E	0.8	3.0

303

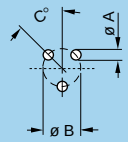

Series	Dimensions		
	A	B	C
0S-0E	0.6	2.8	45°
1S-1E	0.8	3.5	45°
2S-2E	0.8	5.5	60°

304

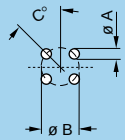

Series	Dimensions		
	A	B	C
0S-0E	0.6	2.8	45°
1S-1E	0.8	3.5	45°
2S-2E	0.8	5.0	45°

305

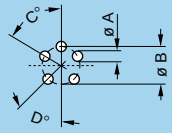

Series	Dimensions			
	A	B	C	D
1S-1E	0.8	3.5	60°	45°
2S-2E	0.8	5.5	60°	60°

306

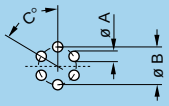

Series	Dimensions		
	A	B	C
1S-1E	0.8	3.5	60°
2S-2E	0.8	5.5	60°
3S-3E	0.8	6.5	60°

307

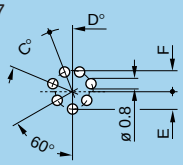

Series	Dimensions			
	C	D	E	F
2S-2E	45°	22°30'	2.75	3.25
3S-3E	45°	22°30'	3.25	3.90

308

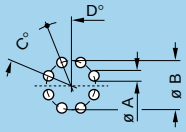

Series	Dimensions			
	A	B	C	D
2S-2E	0.8	6.5	45°	22°30'
3S-3E	0.8	7.8	45°	22°30'

310

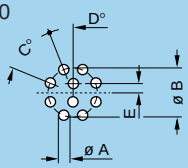

Series	Dimensions				
	A	B	C	D	E
2S-2E	0.8	6.5	45°	22°30'	1.25
3S-3E	0.8	7.8	45°	22°30'	1.50

3S-3E.312

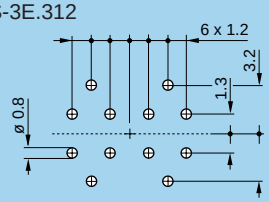

3S-3E.313

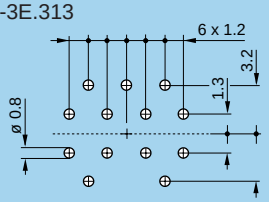

3S-3E.314

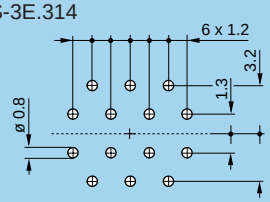

3S-3E.316

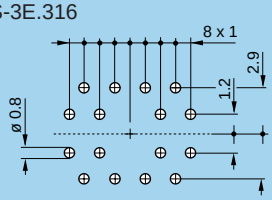

3S-3E.318

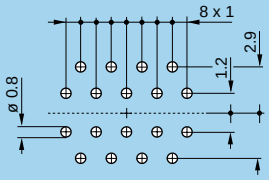

Note: all views are from the side of the socket.

Length of straight print contacts (for socket E••)

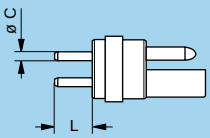

	Type	Dimensions	
		ø C	L
0S 0E	302	0.7	3.0
	303	0.5	3.0
	304	0.5	3.0
1S 1E	302	0.7/1.5	3.0/5.0
	303/304/305	0.7	3.0
	305/306	0.5	3.0

	Type	Dimensions	
		ø C	L
2S 2E	303/304/305	0.7	3.0
	306/307	0.7	3.0
	308/310	0.7	3.0
3S 3E	305/306/307/308/310	0.7	3.0
	312/313/314	0.7	3.0
	316/318	0.7	3.0

Note: This table does not apply for HGP and EHP sockets and for FAA plugs.

Elbow socket (90°) for printed circuit (S series) P22 P23

P22 - EPL - EXP
Solder mount

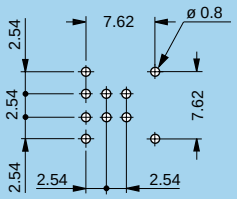

P22 - EPL - EXP
Screw mount

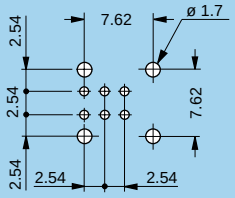

P23 - EPL.00.113

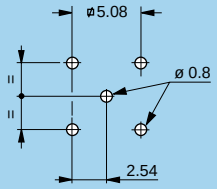

P23 - EPL.0S.116

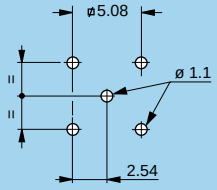

Note: all dimensions are in millimetres.

Fixed socket with elbow print contact (S-E series) P24

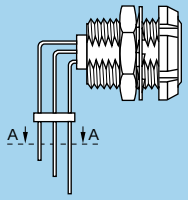

302

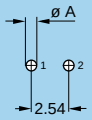

Series	Dim.
	A
0S-0E	0.7
1S-1E	0.9

303

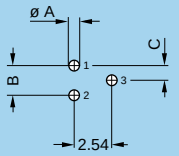

Series	Dimensions		
	A	B	C
0S-0E	0.7	2.00	1.00
1S-1E	0.7	2.48	1.24

304

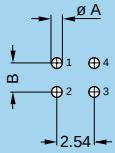

Series	Dimensions	
	A	B
0S-0E	0.7	2.00
1S-1E	0.7	3.50
2S-2E	0.9	3.50

305

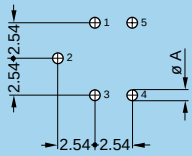

Series	Dim.
	A
1S-1E	0.7
2S-2E	0.9

306

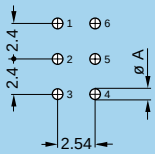

Series	Dim.
	A
1S-1E	0.7
2S-2E	0.9

2S-2E.307

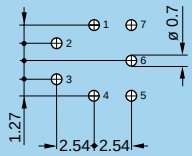

2S-2E.308

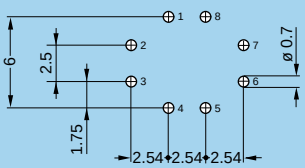

2S-2E / 3S-3E.310

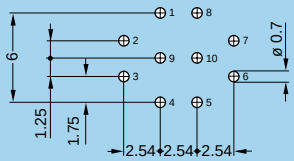

3S-3E.312

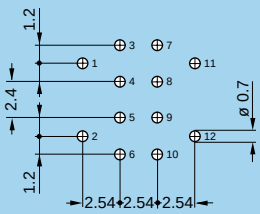

3S-3E.314

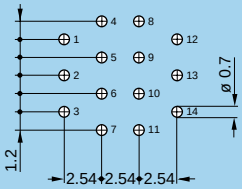

3S-3E.316

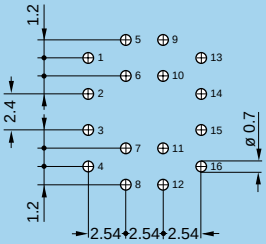

Cable assembly (B, K, S and E series)

Cable stripping lengths (B series)

M1 **straight plugs and sockets with cable collet, clamping type D or M (solder or crimp contacts)**

M3 **elbow plugs (90°) with cable collet, clamping type D or M (solder or crimp contacts)**

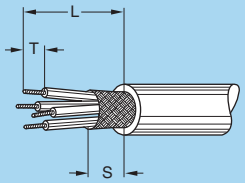

Connector		ø contact A (mm)	Cable stripping lengths (mm)											
			M1						M3					
			Solder			Crimp			Solder			Crimp		
Series	Type		L	S	T	L	S	T	L	S	T	L	S	T
00	302/303/304	0.5	7.0	4	2.5	10.0	4	3.0	9.5	4	2.5	12.5	4	3.0
0B[1]	302/303	0.9	14.5	7	3.5	17.0	7	4.0	19.5	7	3.5	22.0	7	4.0
	304/305	0.7	14.5	7	3.5	17.0	7	4.0	19.5	7	3.5	22.0	7	4.0
	306/307/309[2]	0.5	14.0	7	2.5	18.0	7	3.0	19.0	7	2.5	23.0	7	3.0
1B[1]	302/303	1.3	14.0	8	3.5	18.0	8	4.0	25.0	8	3.5	28.0	8	4.0
	304/305	0.9	14.0	8	3.0	18.0	8	4.0	25.0	8	3.0	28.0	8	4.0
	306/307/308	0.7	14.0	8	3.0	18.0	8	4.0	25.0	8	3.0	28.0	8	4.0
	310/314/316	0.5	16.5	8	2.5	–	–	–	27.5	8	2.5	–	–	–
2B	302	2.0	19.0	9	4.0	22.0	9	5.5	30.0	9	4.0	33.0	9	5.5
	303	1.6	19.0	9	3.5	22.0	9	5.5	30.0	9	3.5	33.0	9	5.5
	304/305/306/307	1.3	18.0	9	3.5	20.0	9	4.0	29.0	9	3.5	31.0	9	4.0
	308/310	0.9	17.0	9	3.0	20.0	9	4.0	28.0	9	3.0	31.0	9	4.0
	312/314/316/318/319	0.7	17.0	9	3.0	20.0	9	4.0	28.0	9	3.0	31.0	9	4.0
	326/332	0.5	17.0	9	2.5	–	–	–	28.0	9	2.5	–	–	–
3B	302	3.0	24.0	10	4.5	28.0	10	5.5	35.0	10	4.5	39.0	10	5.5
	303/304	2.0	23.0	10	4.0	27.0	10	5.5	34.0	10	4.0	38.0	10	5.5
	305/306/307	1.6	23.0	10	3.5	27.0	10	5.5	34.0	10	3.5	38.0	10	5.5
	308/310	1.3	22.0	10	3.5	25.0	10	4.0	33.0	10	3.5	36.0	10	4.0
	309	1.3	22.0	10	3.5	25.0	10	4.0	33.0	10	3.5	36.0	10	4.0
		2.0			4.0			5.5			4.0			5.5
	312/314/316/318	0.9	21.0	10	3.0	25.0	10	4.0	32.0	10	3.0	36.0	10	4.0
	320/322/324/326/330	0.7	21.0	10	3.0	25.0	10	4.0	32.0	10	3.0	36.0	10	4.0
4B	304	3.0	33.0	12	4.5	36.0	12	5.5	41.0	12	4.5	45.0	12	5.5
	306/307	2.0	32.0	12	4.0	36.0	12	5.5	41.0	12	4.0	45.0	12	5.5
	310	1.6	32.0	12	3.5	36.0	12	5.5	39.0	12	3.5	43.0	12	5.5
	312	1.3	32.0	12	3.5	36.0	12	4.0	39.0	12	3.5	43.0	12	4.0
	316/320/324/330	0.9	32.0	12	3.0	34.0	12	4.0	39.0	12	3.0	43.0	12	4.0
	340/348	0.7	32.0	12	3.0	34.0	12	4.0	39.0	12	3.0	43.0	12	4.0
5B[1]	302	6.0	42.0	18	7.5	–	–	–	70.0	18	7.5	–	–	–
	304	4.0	47.0	18	5.5	50.0	18	7.0	75.0	18	5.5	78.0	18	7.0
	310	3.0	47.0	18	4.5	50.0	18	7.0	75.0	18	4.5	78.0	18	7.0
	314/316	2.0	46.0	18	4.0	49.0	18	5.5	74.0	18	4.0	77.0	18	5.5
	320	1.6	46.0	18	3.5	49.0	18	5.5	74.0	18	3.5	77.0	18	5.5
	330/340/348	1.3	45.0	18	3.5	48.0	18	4.0	74.0	18	3.5	77.0	18	4.0
	350/354/364	0.9	45.0	18	3.0	48.0	18	4.0	74.0	18	3.0	77.0	18	4.0

M4 **straight plug, short version, clamping type D or M (solder or crimp contacts)**

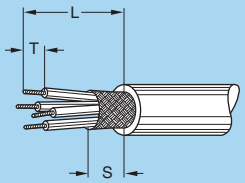

Connector		ø contact A (mm)	Cable stripping lengths (mm)					
			M4					
			Solder			Crimp		
Series	Type		L	S	T	L	S	T
0B	302/303	0.9	9.5	8	3.0	13.0	8	4.0
	304/305	0.7	9.5	8	3.0	13.0	8	4.0
	306/307/309[2]	0.5	10.0	8	2.5	13.5	8	3.0

Note: the tolerances on these dimensions are: L: ± 0.5 mm; S: ± 0.5 mm; T: ± 0.2 mm.
[1] In 0B and 1B series, «L» and «S» dimensions shall be increased by 2 mm for the largest collet (D56 in 0B series; D76 in 1B series).
In 5B series, «L» and «S» dimensions shall be increased by 13 mm for the largest collet (D25).
[2] Crimp contacts are available only for connectors fitted with male contacts.

M2 **straight plug, long version, clamping type D or M (solder or crimp contacts)**

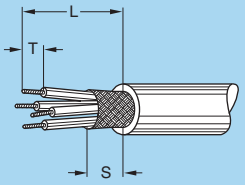

Connector		ø contact A (mm)	Cable stripping lengths (mm)					
			M2					
			Solder			Crimp		
Series	Type		L	S	T	L	S	T
1B[1]	302/303	1.3	39.0	8	3.5	43.0	8	4.0
	304/305	0.9	39.0	8	3.0	43.0	8	4.0
	306/307/308	0.7	39.0	8	3.0	43.0	8	4.0
	310/314/316	0.5	42.0	8	2.5	–	–	–
2B	302	2.0	49.0	9	4.0	53.0	9	5.5
	303	1.6	49.0	9	3.5	53.0	9	5.5
	304/305/306/307	1.3	48.0	9	3.5	50.0	9	4.0
	308/310	0.9	47.0	9	3.0	49.0	9	4.0
	312/314/316/318/319	0.7	47.0	9	3.0	49.0	9	4.0
	326/332	0.5	47.0	9	2.5	–	–	–

Note:
[1] In 0B and 1B series, «L» and «S» dimensions shall be increased by 2 mm for the largest collet (D56 in 0B series; D76 in 1B series).
In 5B series, «L» and «S» dimensions shall be increased by 13 mm for the largest collet (D25).
The tolerances on these dimensions are: L: ± 0.5 mm; S: ± 0.5 mm; T: ± 0.2 mm

Cable stripping lengths (K series)

M1 **straight plugs and sockets with cable collet, clamping type C (solder or crimp contacts)**

M3 **elbow plug (90°) with cable collet, clamping type C (solder or crimp contacts)**

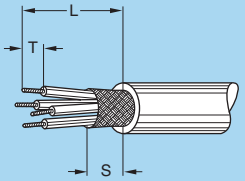

Connector		ø contact A (mm)	Cable stripping lengths (mm)											
			M1						M3					
			Solder			Crimp			Solder			Crimp		
Series	Type		L	S	T	L	S	T	L	S	T	L	S	T
0K	302/303	0.9	9.5	6	3.5	12.0	6	4.0	22.5	6	3.5	25.0	6	4.0
	304/305	0.7	9.5	6	3.5	12.0	6	4.0	22.5	6	3.5	25.0	6	4.0
	306/307/309[1]	0.5	9.0	6	2.5	13.0	6	4.0	22.0	6	2.5	26.0	6	4.0
1K	302/303	1.3	10.5	7	3.5	14.5	7	4.0	27.0	7	3.5	31.0	7	4.0
	304/305	0.9	10.5	7	3.0	14.5	7	4.0	27.0	7	3.0	31.0	7	4.0
	306/307/308	0.7	10.5	7	3.0	14.5	7	4.0	27.0	7	3.0	31.0	7	4.0
	310/314/316	0.5	13.0	7	2.5	–	–	–	29.5	7	2.5	–	–	–
2K	302	2.0	16.5	8	4.0	19.5	8	5.5	36.0	8	4.0	39.0	8	5.5
	303	1.6	16.5	8	3.5	19.5	8	5.5	36.0	8	3.5	39.0	8	5.5
	304/305/306/307	1.3	15.5	8	3.5	17.5	8	4.0	35.0	8	3.5	37.0	8	4.0
	308/310	0.9	14.5	8	3.0	17.5	8	4.0	34.0	8	3.0	37.0	8	4.0
	312/314/316/318/319	0.7	14.5	8	3.0	17.5	8	4.0	34.0	8	3.0	37.0	8	4.0
	326/332	0.5	14.5	8	2.5	–	–	–	34.0	8	2.5	–	–	–
3K	302	3.0	19.0	10	4.5	23.0	10	5.5	48.0	10	4.5	53.0	10	5.5
	303/304	2.0	18.0	10	4.0	22.0	10	5.5	48.0	10	4.0	52.0	10	5.5
	305/306/307	1.6	18.0	10	3.5	22.0	10	5.5	48.0	10	3.5	52.0	10	5.5
	308/310	1.3	17.0	10	3.5	20.0	10	4.0	47.0	10	3.5	50.0	10	4.0
	309	1.3	17.0	10	3.5	20.0	10	4.0	47.0	10	3.5	50.0	10	4.0
		2.0			4.0			5.5			4.0			5.5
	312/314/316/318	0.9	16.0	10	3.0	20.0	10	4.0	46.0	10	3.0	50.0	10	4.0
	320/322/324/326/330	0.7	16.0	10	3.0	20.0	10	4.0	46.0	10	3.0	50.0	10	4.0
4K	304	3.0	22.0	11	4.5	25.0	11	5.5	52.0	11	4.5	55.0	11	5.5
	306/307	2.0	21.0	11	4.0	25.0	11	5.5	51.0	11	4.0	55.0	11	5.5
	310	1.6	21.0	11	3.5	25.0	11	5.5	51.0	11	3.5	55.0	11	5.5
	312	1.3	21.0	11	3.5	25.0	11	4.0	51.0	11	3.5	55.0	11	4.0
	316/320/324/330	0.9	21.0	11	3.0	23.0	11	4.0	51.0	11	3.0	53.0	11	4.0
	340/348	0.7	21.0	11	3.0	23.0	11	4.0	51.0	11	3.0	53.0	11	4.0
5K	302	6.0	24.0	14	7.5	–	–	–	–	–	–	–	–	–
	304	4.0	29.0	14	5.5	32.0	14	7.0	–	–	–	–	–	–
	310	3.0	29.0	14	4.5	32.0	14	7.0	–	–	–	–	–	–
	314/316	2.0	28.0	14	4.0	31.0	14	5.5	–	–	–	–	–	–
	320	1.6	28.0	14	3.5	31.0	14	5.5	–	–	–	–	–	–
	330/340/348	1.3	27.0	14	3.5	30.0	14	4.0	–	–	–	–	–	–
	350/354/364	0.9	27.0	14	3.0	30.0	14	4.0	–	–	–	–	–	–

Note: [1] crimp contacts are available only for connectors fitted with male contacts.
The tolerances on these dimensions are: L: ± 0.5 mm; S: ± 0.5 mm; T: ± 0.2 mm.

Cable stripping lengths (K series)

M2 **straight plug and socket with oversize cable collet, clamping type K (solder or crimp contacts)**

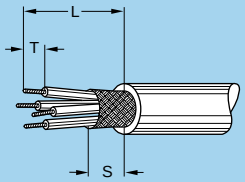

Connector		ø contact A (mm)	Cable stripping lengths (mm)					
			M2					
			Solder			Crimp		
Series	Type		L	S	T	L	S	T
1K	302/303	1.3	24.5	8	3.5	28.5	8	4.0
	304/305	0.9	24.5	8	3.0	28.5	8	4.0
	306/307/308	0.7	24.5	8	3.0	28.5	8	4.0
	310/314/316	0.5	27.0	8	2.5	–	–	–
2K	302	2.0	29.5	10	4.0	32.5	10	5.5
	303	1.6	29.5	10	3.5	32.5	10	5.5
	304/305/306/307	1.3	28.5	10	3.5	30.5	10	4.0
	308/310	0.9	27.5	10	3.0	30.5	10	4.0
	312/314/316/318/319	0.7	27.5	10	3.0	30.5	10	4.0
	326/332	0.5	27.5	10	2.5	–	–	–
3K	302	3.0	37.0	11	4.5	41.0	11	5.5
	303/304	2.0	36.0	11	4.0	40.0	11	5.5
	305/306/307	1.6	36.0	11	3.5	40.0	11	5.5
	308/310	1.3	35.0	11	3.5	38.0	11	4.0
	309	1.3	35.0	11	3.5	38.0	11	4.0
		2.0			4.0			5.5
	312/314/316/318	0.9	34.0	11	3.0	38.0	11	4.0
	320/322/324/326/330	0.7	34.0	11	3.0	38.0	11	4.0
4K	304	3.0	45.0	14	4.5	48.0	14	5.5
	306/307	2.0	44.0	14	4.0	48.0	14	5.5
	310	1.6	44.0	14	3.5	48.0	14	5.5
	312	1.3	44.0	14	3.5	48.0	14	4.0
	316/320/324/330	0.9	44.0	14	3.0	46.0	14	4.0
	340/348	0.7	44.0	14	3.0	46.0	14	4.0

Note:
the tolerances on these dimensions are: L: ± 0.5 mm
S: ± 0.5 mm
T: ± 0.2 mm

Cable stripping lengths for unipole connectors (S series)

M1 **straight plugs and sockets with cable collet, clamping type C (solder contacts)**

M3 **elbow plugs (90°) with cable collet, clamping type C (solder contacts)**

M5 **straight plugs and sockets with cable crimping type E (crimp contacts)**

M6 **elbow plugs (90°) with cable crimping type E (crimp contacts)**

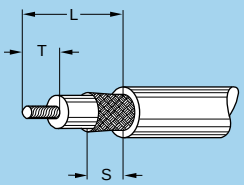

Connector		ø contact A (mm)	Cable stripping lengths (mm)											
			M1			M5			M3			M6		
			Solder			Crimp			Solder			Crimp		
Series	Type		L	S	T	L	S	T	L	S	T	L	S	T
00	113	1.3	9	4	4	19	5	7	7	4	2	17	5	7
0S	116	1.6	11	5	4	–	–	–	8	5	2	–	–	–
1S	120	2.0	13	8	5	–	–	–	13	8	2	–	–	–
	130	3.0	13	8	5	–	–	–	13	8	2	–	–	–
2S	130	3.0	18	9	6	–	–	–	15	9	2	–	–	–
	140	4.0	18	9	6	–	–	–	15	9	2	–	–	–
3S	140	4.0	21	9	7	–	–	–	19	9	2	–	–	–
	160	6.0	21	9	9	–	–	–	19	9	2	–	–	–
4S	140	4.0	25	9	7	–	–	–	23	9	2	–	–	–
	160	6.0	25	9	9	–	–	–	23	9	2	–	–	–
5S	112	12.0	12	15	12	–	–	–	–	–	–	–	–	–

Cable stripping lengths for unipole connectors (S series)

M2 **straight plugs and sockets with oversize cable collet, clamping type K (solder contacts)**

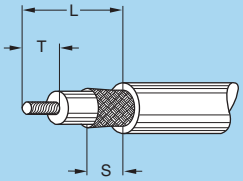

Connector		ø contact A (mm)	Cable stripping lengths (mm)		
			M2		
			Solder		
Series	Type		L	S	T
00	113	1.3	16	4	4
0S	116	1.6	19	5	4
1S	120	2.0	25	8	5
	130	3.0	25	8	5
2S	130	3.0	34	9	6
	140	4.0	34	9	6
3S	140	4.0	39	9	7
	160	6.0	39	9	9
4S	140	4.0	50	9	7
	160	6.0	50	9	9

Cable stripping lengths for multipole connectors (S series)

M1 **straight plugs and sockets with cable collet, clamping type C (solder or crimp contacts)**

M3 **elbow plugs (90°) with cable collet, clamping type C (solder or crimp contacts)**

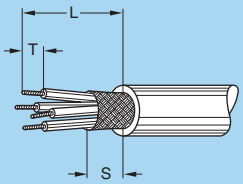

Connector		ø contact A (mm)	Cable stripping lengths (mm)											
			M1						M3					
			Solder			Crimp			Solder			Crimp		
Series	Type		L	S	T	L	S	T	L	S	T	L	S	T
0S	302	0.9	10	5	3.5	15	5	4.0	10	5	3.5	15	5	4.0
	303/304	0.7	10	5	3.5	15	5	4.0	10	5	3.5	15	5	4.0
1S	302	1.3	13	8	3.0	17	8	4.0	13	8	3.0	17	8	4.0
	303/304	0.9	13	8	3.0	17	8	4.0	13	8	3.0	17	8	4.0
	305	0.9	13	8	3.0	17	8	4.0	13	8	3.0	17	8	4.0
		0.7	13	8	2.5	17	8	4.0	13	8	2.5	17	8	4.0
	306	0.7	13	8	2.5	17	8	4.0	13	8	2.5	17	8	4.0
2S	302	1.6	18	9	4.5	22	9	5.5	18	9	4.5	22	9	5.5
	303/304/305/306	1.3	18	9	4.0	22	9	4.0	18	9	4.0	22	9	4.0
	307	1.3	18	9	4.0	22	9	4.0	18	9	4.0	22	9	4.0
		0.9	18	9	4.0	22	9	4.0	18	9	4.0	22	9	4.0
	308/310	0.9	18	9	4.0	22	9	4.0	18	9	4.0	22	9	4.0
3S	302/303/304	2.0	21	9	5.0	–	–	–	–	–	–	–	–	–
	305	2.0	21	9	5.0	–	–	–	–	–	–	–	–	–
		1.3	21	9	4.0	–	–	–	–	–	–	–	–	–
	306/307/308/310	1.3	21	9	4.0	–	–	–	–	–	–	–	–	–
	312/313/314/316/318	0.9	21	9	4.0	–	–	–	–	–	–	–	–	–
4S	302	4.0	25	9	7.0	–	–	–	–	–	–	–	–	–
	303/304	3.0	25	9	6.0	–	–	–	–	–	–	–	–	–
	305	3.0	25	9	6.0	–	–	–	–	–	–	–	–	–
		2.0	25	9	5.0	–	–	–	–	–	–	–	–	–
	306	2.0	25	9	5.0	–	–	–	–	–	–	–	–	–
	307	2.0	25	9	5.0	–	–	–	–	–	–	–	–	–
		1.3	25	9	4.0	–	–	–	–	–	–	–	–	–
	308/309/310	1.3	25	9	4.0	–	–	–	–	–	–	–	–	–
	312/313/314	1.3	25	9	4.0	–	–	–	–	–	–	–	–	–
	316/318/320/322/324	0.9	25	9	4.0	–	–	–	–	–	–	–	–	–

Cable stripping lengths for multipole connectors (S series)

M1 **straight plugs and sockets with cable collet, clamping type C (solder contacts)**

M3 **elbow plugs (90°) with cable collet, clamping type C (solder contacts)**

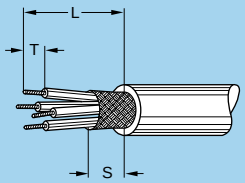

Connector		ø contact A (mm)	Cable stripping lengths (mm)					
			M1			M3		
			Solder			Solder		
Series	Type		L	S	T	L	S	T
5S	302	6.0	35	22	9.0	35	22	9.0
	303	6.0	35	22	9.0	35	22	9.0
		4.0	35	22	7.0	35	22	7.0
	304	4.0	35	22	7.0	35	22	7.0
	305	4.0	35	22	7.0	35	22	7.0
		3.0	35	22	6.0	35	22	6.0
	306/308	3.0	35	22	6.0	35	22	6.0
	310/312	2.0	35	22	7.0	35	22	7.0
	314	3.0	35	22	6.0	35	22	6.0
		2.0	35	22	7.0	35	22	7.0
	316	2.0	35	22	7.0	35	22	7.0
	318	3.0	35	22	6.0	35	22	6.0
		1.6	35	22	4.5	35	22	4.5
	320	1.6	35	22	4.5	35	22	4.5
	322	3.0	35	22	6.0	35	22	6.0
		1.6	35	22	4.5	35	22	4.5
	324	1.6	35	22	4.5	35	22	4.5
	330/336/340/344/348	1.3	35	22	4.0	35	22	4.0
6S	304	8.0	37	15	10.0	37	15	10.0
	312/318	4.0	37	15	7.0	37	15	7.0
	320/324	3.0	37	15	6.0	37	15	6.0
	330/336/348	2.0	37	15	7.0	37	15	7.0
	360	1.6	37	15	4.5	37	15	4.5
	364/372	1.3	37	15	4.0	37	15	4.0
	106	0.9	37	15	4.0	37	15	4.0

Cable stripping lengths for multipole connectors (S series)

M4 **straight plug with cable collet, clamping type D or M (solder or crimp contacts)**

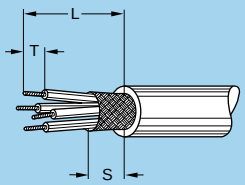

Connector		ø contact A (mm)	Cable stripping lengths (mm)					
			M4					
			Solder			Crimp		
Series	Type		L	S	T	L	S	T
2S	302	1.6	48	9	4.5	52	9	5.5
	303/304/305/306	1.3	48	9	4.0	52	9	4.0
	307	1.3	48	9	4.0	52	9	4.0
		0.9	48	9	4.0	52	9	4.0
	308/310	0.9	48	9	4.0	52	9	4.0

Cable stripping lengths for multipole connectors (S series)

M2 **straight plugs and sockets with oversize cable collet, clamping type K (solder or crimp contacts)**

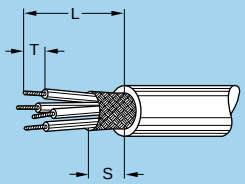

Connector		ø contact A (mm)	Cable stripping lengths (mm)					
			M2					
			Solder			Crimp		
Series	Type		L	S	T	L	S	T
0S	302	0.9	19	5	3.0	23	5	4.0
	303/304	0.7	19	5	2.5	23	5	4.0
1S	302	1.3	25	8	3.0	28	8	4.0
	303/304	0.9	25	8	3.0	28	8	4.0
	305	0.9	25	8	3.0	28	8	4.0
		0.7	25	8	2.5	28	8	4.0
	306	0.7	25	8	2.5	28	8	4.0
2S	302	1.6	34	9	4.5	38	9	5.5
	303/304/305/306	1.3	34	9	4.0	38	9	4.0
	307	1.3	34	9	4.0	38	9	4.0
		0.9	34	9	4.0	38	9	4.0
	308/310	0.9	34	9	4.0	38	9	4.0
3S	302/303/304	2.0	39	9	5.0	–	–	–
	305	2.0	39	9	5.0	–	–	–
		1.3	39	9	4.0	–	–	–
	306/307/308/310	1.3	39	9	4.0	–	–	–
	312/313/314/316/318	0.9	39	9	4.0	–	–	–
4S	302	4.0	50	9	7.0	–	–	–
	303/304	3.0	50	9	6.0	–	–	–
	305	3.0	50	9	6.0	–	–	–
		2.0	50	9	5.0	–	–	–
	306	2.0	50	9	5.0	–	–	–
	307	2.0	50	9	5.0	–	–	–
		1.3	50	9	4.0	–	–	–
	308/309/310	1.3	50	9	4.0	–	–	–
	312/313/314	1.3	50	9	4.0	–	–	–
	316/318/320/322/324	0.9	50	9	4.0	–	–	–
5S	302	6.0	70	22	9.0	–	–	–
	303	6.0	70	22	9.0	–	–	–
		4.0	70	22	7.0	–	–	–
	304	4.0	70	22	7.0	–	–	–
	305	4.0	70	22	7.0	–	–	–
		3.0	70	22	6.0	–	–	–
	306/308	3.0	70	22	6.0	–	–	–
	310/312	2.0	70	22	7.0	–	–	–
	314	3.0	70	22	6.0	–	–	–
		2.0	70	22	7.0	–	–	–
	316	2.0	70	22	7.0	–	–	–
	318	3.0	70	22	6.0	–	–	–
		1.6	70	22	4.5	–	–	–
	320	1.6	70	22	4.5	–	–	–
	322	3.0	70	22	6.0	–	–	–
		1.6	70	22	4.5	–	–	–
	324	1.6	70	22	4.5	–	–	–
	330/336/340/344/348	1.3	70	22	4.0	–	–	–

Cable stripping lengths for unipole connectors (E series)

M1 **straight plugs and sockets with cable collet, clamping type C (solder contacts)**

M3 **elbow plugs (90°) with cable collet, clamping type C (solder contacts)**

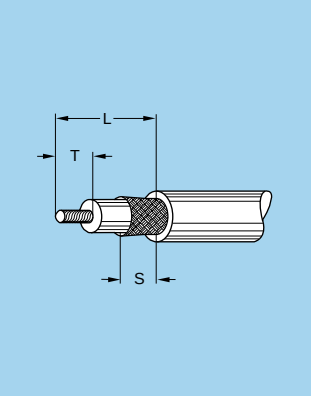

Connector		ø contact A (mm)	Cable stripping lengths (mm)					
			M1			**M3**		
			Solder			Solder		
Series	Type		L	S	T	L	S	T
0E	116	1.6	9	5	4	20	5	4
1E	120	2.0	12	8	5	25	8	5
	130	3.0	13	8	5	25	8	5
2E	130	3.0	16	9	6	33	9	6
	140	4.0	15	9	6	33	9	6
3E	140	4.0	19	9	7	40	9	7
	160	6.0	20	9	9	40	9	9
4E	160	6.0	23	9	9	50	9	9
5E	112	12.0	12	15	12	–	–	–

Cable stripping lengths for unipole connectors (E series)

M2 **straight plugs and sockets with oversize cable collet, clamping type K (solder contacts)**

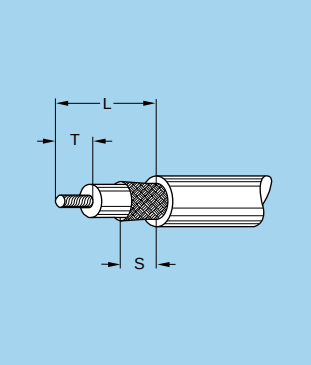

Connector		ø contact A (mm)	Cable stripping lengths (mm)		
			M2		
			Solder		
Series	Type		L	S	T
1E	120	2.0	25	8	5
	130	3.0	26	8	5
2E	130	3.0	28	9	6
	140	4.0	27	9	6
3E	140	4.0	36	9	7
	160	6.0	37	9	9
4E	160	6.0	50	9	9

Cable stripping lengths for multipole connectors (E series)

M1 **straight plugs and sockets with cable collet, clamping type C (solder or crimp contacts)**

M3 **elbow plugs (90°) with cable collet, clamping type C (solder or crimp contacts)**

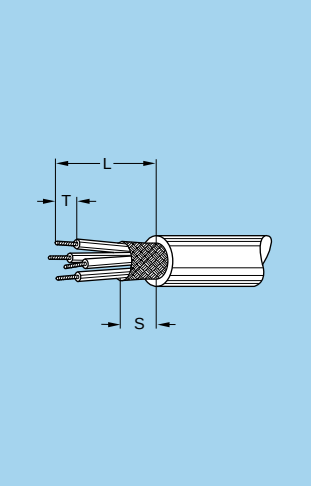

Connector		ø contact A (mm)	Cable stripping lengths (mm)											
			M1						**M3**					
			Solder			Crimp			Solder			Crimp		
Series	Type		L	S	T	L	S	T	L	S	T	L	S	T
0E	302	0.9	8	5	3.0	12	5	4.0	19	5	3.0	23	5	4.0
	303/304	0.7	8	5	2.5	12	5	4.0	19	5	2.5	23	5	4.0
1E	302	1.3	11	8	3.0	15	8	4.0	24	8	3.0	28	8	4.0
	303/304	0.9	11	8	3.0	15	8	4.0	24	8	3.0	28	8	4.0
	305	0.9	11	8	3.0	15	8	4.0	24	8	3.0	28	8	4.0
		0.7	11	8	2.5	15	8	4.0	24	8	2.5	28	8	4.0
	306	0.7	11	8	2.5	15	8	4.0	24	8	2.5	28	8	4.0
2E	302	1.6	15	9	4.5	19	9	5.5	33	9	4.5	37	9	5.5
	303/304/305/306	1.3	15	9	4.0	19	9	4.0	33	9	4.0	37	9	4.0
	307	1.3	15	9	4.0	19	9	4.0	33	9	4.0	37	9	4.0
		0.9	15	9	4.0	19	9	4.0	33	9	4.0	37	9	4.0
	308/310	0.9	15	9	4.0	19	9	4.0	33	9	4.0	37	9	4.0

Cable stripping lengths for multipole connectors (E series)

M1 **straight plugs and sockets with cable collet, clamping type C (solder contacts)**

M3 **elbow plugs (90°) with cable collet, clamping type C (solder contacts)**

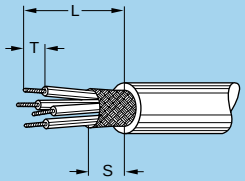

Connector		ø contact A (mm)	Cable stripping lengths (mm)					
			M1			**M3**		
			Solder			Solder		
Series	Type		L	S	T	L	S	T
3E	302/303/304	2.0	18	9	5.0	39	9	5.0
	305	2.0	18	9	5.0	39	9	5.0
		1.3	18	9	4.0	39	9	4.0
	306/307/308/310	1.3	18	9	4.0	39	9	4.0
	312/313/314/316/318	0.9	18	9	4.0	39	9	4.0
4E	302	4.0	23	9	7.0	50	9	7.0
	303/304	3.0	23	9	6.0	50	9	6.0
	305	3.0	23	9	6.0	50	9	6.0
		2.0	23	9	5.0	50	9	5.0
	306	2.0	23	9	5.0	50	9	5.0
	307	2.0	23	9	5.0	50	9	5.0
		1.3	23	9	4.0	50	9	4.0
	308/309/310/312/314	1.3	23	9	4.0	50	9	4.0
	316/318/320/322/324	0.9	23	9	4.0	50	9	4.0
5E	302	6.0	48	15	9.0	–	–	–
	303	6.0	48	15	9.0	–	–	–
		4.0	48	15	7.0	–	–	–
	304	4.0	48	15	7.0	–	–	–
	305	4.0	48	15	7.0	–	–	–
		3.0	48	15	6.0	–	–	–
	306/308	3.0	48	15	6.0	–	–	–
	310/312	2.0	48	15	7.0	–	–	–
	314	3.0	48	15	6.0	–	–	–
		2.0	48	15	7.0	–	–	–
	316	2.0	48	15	7.0	–	–	–
	318	3.0	48	15	6.0	–	–	–
		1.6	48	15	4.5	–	–	–
	320	1.6	48	15	4.5	–	–	–
	322	3.0	48	15	6.0	–	–	–
		1.6	48	15	4.5	–	–	–
	324	1.6	48	15	4.5	–	–	–
	330/336/340/344/348	1.3	48	15	4.0	–	–	–
6E	303	6.0	70	30	9.0	–	–	–
	304	8.0	70	30	10.0	–	–	–
	312	5.0	70	30	8.0	–	–	–
	316/320/324	3.0	70	30	6.0	–	–	–
	330/332	2.0	70	30	7.0	–	–	–
	336	1.3	70	30	4.0	–	–	–
		5.0	70	30	8.0	–	–	–
	340/348	2.0	70	30	7.0	–	–	–
	360/362	1.6	70	30	4.5	–	–	–
	364/372	1.3	70	30	4.0	–	–	–
	106	0.9	70	30	4.0	–	–	–

Cable stripping lengths for multipole connectors (E series)

M2 **straight plugs and sockets with oversize cable collet, clamping type K (solder or crimp contacts)**

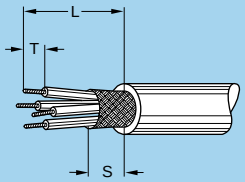

Connector		ø contact A (mm)	Cable stripping lengths (mm)					
			M2					
			Solder			Crimp		
Series	Type		L	S	T	L	S	T
1E	302	1.3	24	8	3.0	28	8	4.0
	303/304	0.9	24	8	3.0	28	8	4.0
	305	0.9	24	8	3.0	28	8	4.0
		0.7	24	8	2.5	28	8	4.0
	306	0.7	24	8	2.5	28	8	4.0
2E	302	1.6	27	9	4.5	31	9	5.5
	303/304/305/306	1.3	27	9	4.0	31	9	4.0
	307	1.3	27	9	4.0	31	9	4.0
		0.9	27	9	4.0	31	9	4.0
	308/310	0.9	27	9	4.0	31	9	4.0
3E	302/303/304	2.0	35	9	5.0	–	–	–
	305	2.0	35	9	5.0	–	–	–
		1.3	35	9	4.0	–	–	–
	306/307/308/310	1.3	35	9	4.0	–	–	–
	312/313/314/316/318	0.9	35	9	4.0	–	–	–
4E	302	4.0	50	9	7.0	–	–	–
	303/304	3.0	50	9	6.0	–	–	–
	305	3.0	50	9	6.0	–	–	–
		2.0	50	9	5.0	–	–	–
	306	2.0	50	9	5.0	–	–	–
	307	2.0	50	9	5.0	–	–	–
		1.3	50	9	4.0	–	–	–
	308/309/310/312/314	1.3	50	9	4.0	–	–	–
	316/318/320/322/324	0.9	50	9	4.0	–	–	–

Cable stripping lengths for multipole connectors (L series)

M1 **straight plugs and sockets with cable collet, clamping type C (solder or crimp contacts)**

M3 **elbow plugs (90°) with cable collet, clamping type C (solder or crimp contacts)**

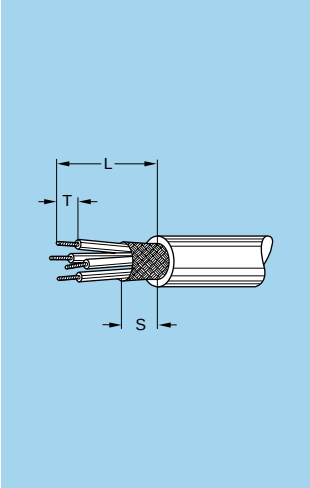

Connector		ø contact A (mm)	Cable stripping lengths (mm)											
			M1						**M3**					
			Solder			Crimp			Solder			Crimp		
Series	Type		L	S	T	L	S	T	L	S	T	L	S	T
0L	302	0.9	10.5	6	3.0	12.0	6	4.0	23.5	6	3.0	25.0	6	4.0
	303/304	0.7	10.5	6	2.5	12.0	6	4.0	23.5	6	2.5	25.0	6	4.0
1L	302	1.3	12.5	7	3.0	14.5	7	4.0	29.0	7	3.0	31.0	7	4.0
	303/304	0.9	12.5	7	3.0	14.5	7	4.0	29.0	7	3.0	31.0	7	4.0
	305	0.9	12.5	7	3.0	14.5	7	4.0	29.0	7	3.0	31.0	7	4.0
		0.7	12.5	7	2.5	14.5	7	4.0	29.0	7	2.5	31.0	7	4.0
	306	0.7	12.5	7	2.5	14.5	7	4.0	29.0	7	2.5	31.0	7	4.0
2L	302	1.6	18.0	8	4.5	19.5	8	5.5	37.5	8	4.5	39.0	8	5.5
	303/304/305/306	1.3	17.0	8	4.0	17.5	8	4.0	36.5	8	4.0	37.0	8	4.0
	307	1.3	17.0	8	4.0	17.5	8	4.0	36.5	8	4.0	37.0	8	4.0
		0.9	16.0	8	4.0	17.5	8	4.0	35.5	8	4.0	37.0	8	4.0
	308/310	0.9	16.0	8	4.0	17.5	8	4.0	35.5	8	4.0	37.0	8	4.0

Cable stripping lengths for multipole connectors (L series)

M2 **straight plugs and sockets with oversize cable collet, clamping type K (solder or crimp contacts)**

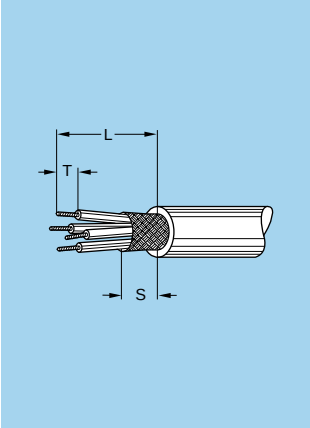

Connector		ø contact A (mm)	Cable stripping lengths (mm)					
			M2					
			Solder			Crimp		
Series	Type		L	S	T	L	S	T
1L	302	1.3	26.5	8	3.0	28.5	8	4.0
	303/304	0.9	26.5	8	3.0	28.5	8	4.0
	305	0.9	26.5	8	3.0	28.5	8	4.0
		0.7	26.5	8	2.5	28.5	8	4.0
	306	0.7	26.5	8	2.5	28.5	8	4.0
2L	302	1.6	31.0	10	4.5	32.5	10	5.5
	303/304/305/306	1.3	30.0	10	4.0	30.5	10	4.0
	307	1.3	30.0	10	4.0	30.5	10	4.0
		0.9	29.0	10	4.0	30.5	10	4.0
	308/310	0.9	29.0	10	4.0	30.5	10	4.0

Technical characteristics

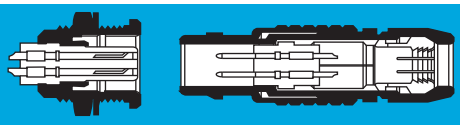

Outer shell

Brass

In most cases, LEMO connectors have a brass outer shell which is suitable for most general purpose applications, including civilian and military. The brass outer shells have a chrome nickel-plated surface which ensures very good protection against industrial atmosphere, salt air and most corrosive agents.

Alternative protective coatings are available to satisfy other specific environmental conditions:
– electrolytic nickel
– nickel-gold
– nickel-black chrome. After the black chrome treatment, the part is coated with a protective organic film.

Stainless steel

For applications where there are severe environmental conditions that may rapidly damage the surface finish, we recommend using stainless steel. The AISI 303 stainless steel is a material for general use adapted to most applications requiring a product made entirely of stainless metal.

For the nuclear industry where elements are subject to radiation and to vaporous nitric acid, we offer AISI 304 stainless steel.

Grade AISI 316L is recommended for medical applications, highly demanding with regard to non-corrosiveness. This material is also used for connector shells soldered by electronic beam onto a device made of the same stainless steel.
These parts have no surface treatment.

Aluminium alloy

The aluminium alloy outer shells find numerous applications where light weight is a predominant factor; such as in the aeronautics and space industries, and for portable and mobile equipment.
These materials have high mechanical strength and excellent resistance to corrosion. The shell surface is protected by anodizing which is available in six colours: blue, yellow, black, red, green, and natural.

Plastic materials

Some connector model shells can be made of plastic. This solution offers optimum electrical insulating properties particularly suitable for medical applications. Black Polyoxymethylene (POM) is particularly adapted to products of the 00 or S series.
Grey or white polysulfone (PSU) and beige PEEK offers excellent mechanical properties and is suitable for gas or vapour sterilization.
Some models of the 2B and 3B series are available with an outer shell of cream-coloured polyphenylsulfone (PPSU). We recommend this material particularly for applications where products are to withstand hundreds of vapour sterilization cycles.

Bridge plug or plugs with parallel sockets are made of polyamide (PA.6) available in 9 colours: blue, white, grey, yellow, brown, black, red, orange and green.

Some elbow socket shells for printed circuits are overmoulded in polyphenilene sulfide (PPS).

Other metallic components

In general, most metallic components are manufactured in brass. However, bronze or beryllium copper are used where good elasticity is required (for example: earthing crown). Depending on the application, these parts have electrolytic nickel or nickel-gold plating.
These parts can also be manufactured in stainless steel.

Sealing gasket

In general, sealing gaskets are made of silicone rubber MQ/MVQ. However, for vacuumtight sockets and couplers, gaskets are made of fluorosilicone rubber (FPM).

Sealing resin

An epoxy resin is used to seal both watertight and vacuumtight socket and coupler models.

Materials and Treatments

Component	Material (Standard)	Surface treatment (µm)										Notes
		chrome			nickel		gold			black chr.		
		Cu	Ni	Cr	Cu	Ni	Cu	Ni	Au	Ni	Cr	
Outer shell, collet nut, conical nut or notched nut and oversized collet	Brass (UNS C 38500)	0.5	3	0.3	0.5	3	0.5	3	0.5	1	2	
	Stainless steel (AISI 303, 304 or 316L)	without treatment										
	Aluminium alloy (AA 6262A or AA 6023)	–	–	–	–	5	–	–	–	–	–	1)
	Aluminium alloy (AA 6262A or AA 6023)	anodized										
	POM (Delrin® or Ertacetal®), Polyoxymethylene, black	–										2)
	PEEK, Polyether ethercetone, beige	–										3)
	PSU (Udel®), Polysulfone, grey or white	–										4)
	PPSU (Radel®), Polyphenylsulfone, cream	–										4)
	PA.6 (Grilon®), Polyamid	–										5)
	PPS (Ryton®), Polyphenilene sulfide, brown	–										6)
Earthing crown	Bronze (UNS C 54400) or special brass	–	–	–	0.5	3	0.5	3	1.0	–	–	7)
	Beryllium Copper (UNS C 17300)	–	–	–	0.5	3	0.5	3	1.0	–	–	8)
	Stainless steel (AISI 416 or 316L)	without treatment										9)
Latch sleeve	Special brass	0.5	3	0.3	0.5	3	0.5	3	0.5	–	–	
	Stainless steel (AISI 416 or 316L)	without treatment										9)
Locking washer	Bronze (UNS C 52100)	–	–	–	0.5	3	0.5	3	0.5	–	–	
Hexagonal or round nut	Brass (UNS C 38500)											
	Stainless steel (AISI 303, 304 or 316L)	without treatment										10)
	Aluminium alloy (AA 6262A or AA 6023)	anodized natural										10)
Other metallic components	Brass (UNS C 38500)	–	–	–	0.5	3	0.5	3	0.5	–	–	
	Stainless steel (AISI 303, 304 or 316L)	without treatment										
O-ring and gaskets	Silicone MQ/MVQ or FPM/FKM (Viton®)	–										11)
Sealing resin	Epoxy (Araldite® or Stycast®)	–										

Notes:
standards for surface treatment are as follows:
– chrome-plated: FS QQ-C-320B
– nickel-plated: FS QQ-N-290A, or MIL DTL 32119
– gold-plated: ISO 27874
– black chrome: MIL-C-14538C with a minimum of 10 µm of lacquer protection

1) anthracite colour (other colours upon request)
2) for FFP, PCP and ERN models of the 0S to 3S series
3) for FFP, PCP and ERN models of the 0S to 3S series and FGG and ENG models of the 1B, 3B and 4B series
4) for the FGY and ENY models of the 2B and 3B series
5) for bridge plugs of the B series
6) for S and B series elbow sockets for printed circuits
7) gold-plating for unipole types
8) used in 00 series free and fixed sockets and couplers
9) AISI 416 steel is used with shells made of AISI 303 or 304
10) delivered with free and fixed sockets with aluminium alloy or stainless steel shell
11) FPM/FKM (Viton®) o-ring and gaskets are installed upon special request. However standard for vacuumtight models.

Technical characteristics of plastic materials

Type	Standard	Units	POM	PEEK	PSU	PPSU	PPS	PA.6	Silicone	FPM	Epoxy
Density	ASTM D 792	–	1.4	1.3-1.4	1.24	1.3	1.67	1.14	~1.2	~1.9	1.58
Tensile strength (at 23°C)	ASTM D 638/ ISO R527	MPa	70-80	92-142	70	70	121	55	> 9	> 12	16
Flexurale strength (at 23°C)	ASTM D 790/ ISO R178	MPA	–	170	106	91	179	75	–	–	24
Dielectric strength	ASTM D 149/IEC 60243	kV/mm	60	19-25	17-20	15	17	35	18-30	–	15
Volume resis. at 50% HR and 23°C	ASTM D 257/IEC 60093	Ω • cm	10^{15}	10^{16}	$5x10^{16}$	–	10^{16}	10^{15}	10^{14}	–	10^{14}
Surface resistivity	ASTM D 257	Ω	10^{13}	10^{15}	–	–	–	–	–	–	–
Thermal conductivity	ASTM C 177	W/K • m	0.31	0.25	0.26	–	0.3	–	–	–	0.8
Comparative tracking index	IEC 60112	V	CTI 600	CTI 150	CTI 150	–	CTI 200	CTI 600	–	–	CTI>600
Maxi. continuous service temperature	UL 746	°C	90	250	140	180	220	80	200	200	80
Min. continuous service temperature	UL 746	°C	-50	-55	-60	-50	-60	-40	-50	-20	-20
Max. short-time service temperature	–	°C	140	300	160	200	250	150	> 250	300	120
Water absorption in 24h at 23°C	ASTM D 570/ISO R62A	%	0.85	0.12	0.3	0.37	< 0.05	> 3	–	–	0.25
Radiation resistance	–	Gy1)	$8x10^3$	10^7	10^5	–	> 10^7	$5x10^3$	10^5	$8x10^4$	$2x10^6$
Flammability rating	ASTM D 635/UL 94 2)	–	HB	V-0/3.2	V-0/4.4	V-0/1.6	V-0/5V	V-2	–	–	V-0/4
Resistance to steam sterilization	–	–	bad	excel.	good	excel.	excel.	bad	good	good	bad

Notes: 1) 1 Gy (Gray) = 100 rad. 2) Depends on material thickness (in mm).

ASTM = American Society for Testing Material
ISO = International Standards Organisation
UL = Underwriters Laboratories
IEC = International Electrotechnical Commission

Mechanical latching characteristics

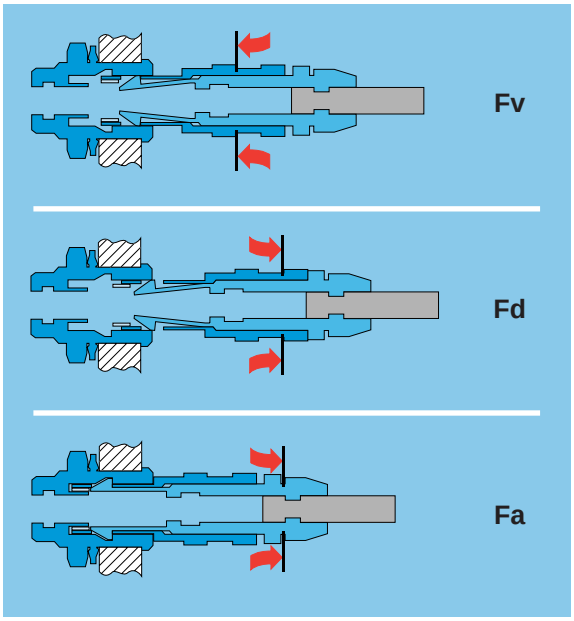

F_v: average latching force.

F_d: average unmating force with axial pull on the outer shell.

F_a: average pull force with axial pull on the collet nut

Standard series

Force (N)	Series									
	00	0S	1D	1S	2C	2S	3S	4S	5S	6S
Fv	9	14	14	15	12	17	20	40	60	70
Fd	7	9	11	10	12	11	14	25	40	55
Fa	120	140	300	250	400	350	500	650	750	900

Watertight series

Force (N)	Series									
	0E	0L	1E	1L	2E	2L	3E	4E	5E	6E
Fv	14	14	16	16	20	20	32	65	85	100
Fd	9	9	10	10	13	13	25	40	60	75
Fa	250	250	300	300	400	400	550	700	800	900

Keyed series

Force (N)	Series							
	00	0B	1B	2B	2G	3B	4B	5B
Fv	9	10	14	15	12	17	39	48
Fd	7	8	11	12	12	14	38	38
Fa	120	250	300	400	400	550	700	800

Keyed watertight series

Force (N)	Series					
	0K	1K	2K	3K	4K	5K
Fv	14	16	20	32	65	85
Fd	9	10	13	25	40	60
Fa	250	300	400	550	700	800

Notes: 1N = 0.102 kg.

Notes: forces were measured on outer shells **not fitted with contacts**.
Mechanical endurance: 5000 cycles.
Mechanical endurance represents the number of cycles after which the latching system is still effective (1 cycle = 1 latching/unlatching at 300 cycles per hour). The values were measured according to the standard IEC 60512-7 test 13a.

Electromagnetic compatibility (EMC) and shielding efficiency

The electromagnetic compatibility of a device can only be ensured by meeting a number of basic rules with the design of the device and by carefully selecting components, cables and connectors.

Electrical and electronic devices are to be designed to ensure the following:

a) reduce the emission of generated electromagnetic disturbance to a level where radios and telecommunication and other devices can properly function;
b) electromagnetic immunity against electromagnetic disturbance so that they can properly function.

When selecting a connector, screen or shielding efficiency and low resistance to electric continuity between the cable and the connector should be considered.
The design of LEMO connectors with metal shell and earthing crown guarantee optimum shielding efficiency in all applications where electromagnetic compatibility (EMC) is critical.
The performance of a connector is measured through shielding efficiency, a value that represents the ratio between the electromagnetic field on the outside and the inside of the shell. Our measurements are carried out according to the IEC 60169-1-3 standard.

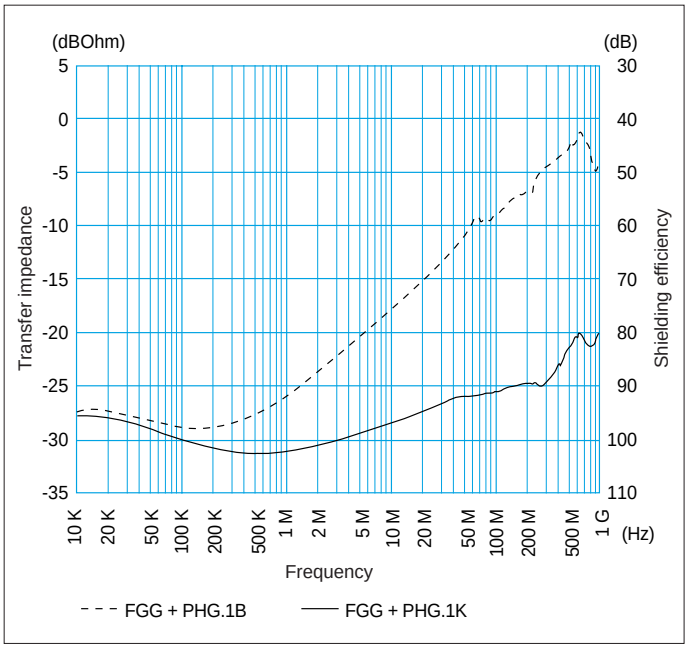

The performance of S and B series connectors is comparable to the results of measurements carried out on a pair of FGG + PHG.1B connectors.

The performance of E and K series connectors is comparable to the results of measurements carried out on a pair of FGG + PHG.1K connectors.

Shell electrical continuity:
(measured according to IEC 60512-2 test 2f)

Test current: 1A
A = Ammeter
mV = Millivoltmeter
G = Generator

R_1 Values with earthing crown and latch sleeve or inner-sleeve nickel-plated.

R_2 Values with gold-plated earthing crown and nickel-plated latch sleeve or inner sleeve.

Standard series

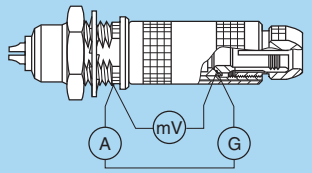

Series	R_1 (mΩ)	R_2 (mΩ)
00	3.5	2.8
0S	2.8	1.6
1D	2.5	1.1
1S	2.2	1.5
2C	–	–

Series	R_1 (mΩ)	R_2 (mΩ)
2S	1.8	1.2
3S	1.6	1.2
4S	1.4	1.0
5S	1.4	1.0
6S	1.0	0.5

Keyed series

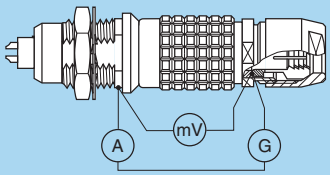

Series	R_1 (mΩ)	R_2 (mΩ)
00	3.5	2.8
0B	3.5	1.3
1B	2.5	1.1
2B	2.2	0.9

Series	R_1 (mΩ)	R_2 (mΩ)
2G	–	–
3B	2.2	0.7
4B	1.5	0.5
5B	1.5	0.3

Watertight series
Keyed watertight series

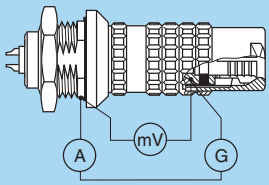

Series	R_1 (mΩ)	R_2 (mΩ)
0E-0K-0L	2.8	1.6
1E-1K-1L	2.2	1.5
2E-2K-2L	1.8	1.2
3E-3K	1.6	1.2
4E-4K	1.4	1.0
5E-5K	1.4	1.0
6E	1.0	0.5

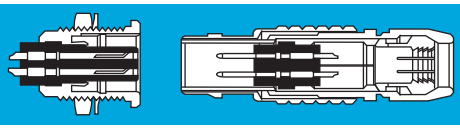

Insulator

Plastic material used by LEMO for manufacturing insulators is selected according to the electric and thermal properties required for the various connector types. Characteristics examined for the two connector types are:
– Dielectric strength;
– Comparative tracking index;
– Surface and volume resistivity;
– Continuous service temperature;
– Water absorption;
– Radiation resistance;
– Flammability rating
– Resistance to hydrocarbon.

Mechanical and Electrical Properties

Mechanical characteristics of thermoplastics, such as PA 6.6, and PEEK, are improved by the addition of glass fibres. By adding glass fibres in the resin the performance of this material (mechanical strength and radiation resistance) is enhanced and water absorption rate is reduced. From an electric point of view, the addition of glass fibres improves dielectric strength.

Selection of the insulator

A number of thermoplastics have common characteristics, some of them are identical with other insulating materials. In this case, the insulator material is selected according to the specific difference in features to provide all the required parameters for the given type.

Radiation resistance

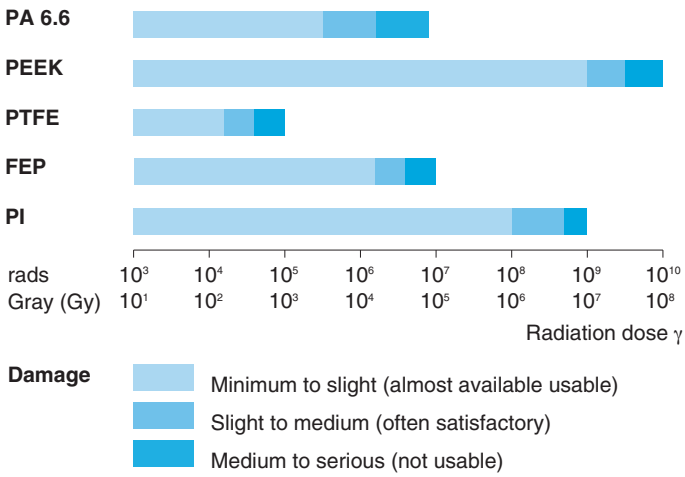

Note: technical data in this chapter provide general information on plastics used by LEMO as electrical insulators. LEMO reserves the right to propose new materials with better technical characteristics, and to withdraw, without notice, any material mentioned in the present catalogue or any other publications edited by LEMO S.A. and/or its subsidiaries. LEMO SA and its subsidiaries use only plastic granules, powder or bars supplied by specialized companies, and thus cannot in any case take responsibility with regard to this material.

Technical characteristics

Type	Standard	Units	PA6.6	PEEK	PTFE	FEP	PI
Dielectric strength	ASTM D 149 / IEC 60243	kV/mm	15-17	19-25	17.2-24	20	22
Volume resistivity at 50% RH and 23°C	ASTM D 257 / IEC 60093	Ω • cm	5.8×10^{15}	10^{16}	10^{18}	> 10^{16}	> 10^{16}
Surface resistivity	ASTM D 257 / IEC 60093	Ω	10^{12}	10^{15}	10^{17}	> 10^{16}	> 10^{15}
Thermal conductivity	ASTM C 177	W/K • m	0.21	0.25	0.23	0.24	0.35
Comparative tracking index	IEC 60112	V	CTI 600	CTI 150	CTI 500	–	–
Dielectric constant (10^6 Hz)	ASTM D 150 / IEC 60250	–	4	3.2-3.5	2-2.1	2.1	3.6
Dissipation factor (10^6 Hz)	ASTM D 150 / IEC 60250	–	–	< 0.005	< 0.0003	< 0.001	< 0.0034
Maximum continuous service temperature	UL 746	°C	120	250	260	200	350
Maximum short-time service temperature	–	°C	150	300	300	260	480
Minimum continuous service temperature	–	°C	–	-55	-200	-200	–
Water absorption in 24h at 23°C	ASTM D 570 / ISO R624	%	< 0.7	< 0.3	< 0.01	< 0.01	0.24
Radiation resistance	–	Gy	5×10^3	10^7	2×10^2	2×10^4	10^6
Flammability rating	ASTM D 635 / UL 94	–	–	V-0/3.2	V-0	V-0	–

Note: values of insulation resistance between contacts are given on page 177.

Designation		Symbol	Standard	Unipole			Multipole							
chemical	commercial			00	S	E	00	S	E	B	K	2C	2G	1D
Polyamide (glass fitted)	Nylatron®	PA 6.6	–					●	●					●
Polyether Ethercetone	Peek®	PEEK	–	○	○	○	●	●	●	●	●	●	●	
Polytetrafluorethylene	–	PTFE	ASTM D 1457-83	●	●	●								
Tetrafluorethylene	–	FEP	ASTM D 2116-81					○	○					
Polyimide	Vespel®	PI	–					○	○					

● First choice alternative
○ Special order alternative

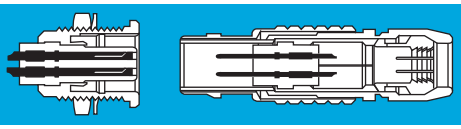

Electrical contact

Technical description

The secure reliable electromechanical connection achieved with LEMO female cylindrical contacts is mainly due to two important design features :

1. *Prod proof entry* on the mating side which ensures perfect concentric mating even with carelessly handled connectors.
2. *The pressure spring*, with good elasticity, maintains a constant even force on the male contact when mated. The leading edge of the pressure spring preserves the surface treatment (gold-plated) and prevents undue wear.

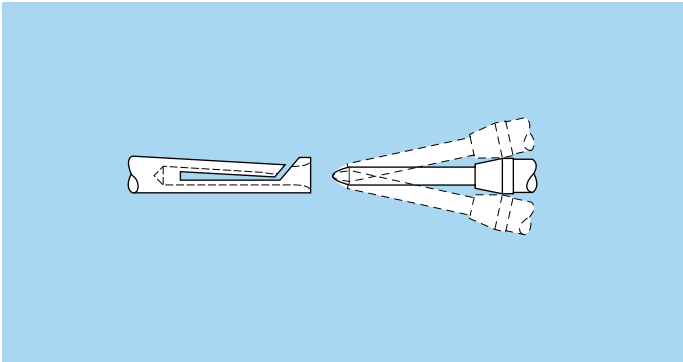

Contact material and treatment

LEMO female contacts are made of bronze beryllium (QQ-C-530) or bronze (UNS C 54400). These materials are chosen because of their high modulus of elasticity, their excellent electrical conductivity and a high mechanical strength.

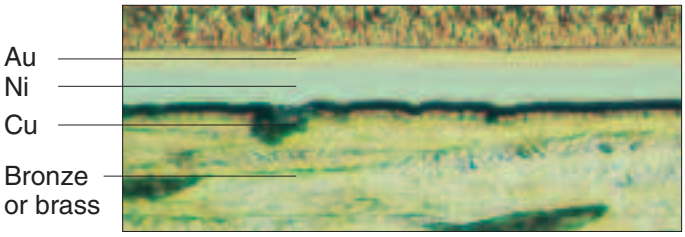

LEMO male solder and print contacts are made of brass (UNS C 38500). Male crimp contacts are made of brass (UNS C 34500) or annealed brass (UNS C 38500) with optimum hardness (HV) for crimping onto the wire.

Type	Material (standard)	Surf. treatment (µm)		
		Cu	Ni	Au[1]
Male crimp	Brass (UNS C 34500)	0.5	3	1.0
	Brass (UNS C 38500)			
Male print	Brass (UNS C 38500)			
Female crimp	Bronze (UNS C 54400) Cu-Be (FS QQ-C-530)	0.5	3	1.5
Female print				
Clips	Cu-Be (FS QQ-C-530)	–	–	–
	Stainless steel			
Connection wire[2]	Brass	–	3[3]	–

Notes: the standard surface treatment are as follows:
– nickel: FS QQ-N-290A or MIL DTL 32119
– gold: ISO 27874.
[1] minimum value
[2] for elbow print contacts
[3] treatment completed by 6 µm Sn (lead free) tin-plating

Thickness comparison between the outside and the inside of female contacts

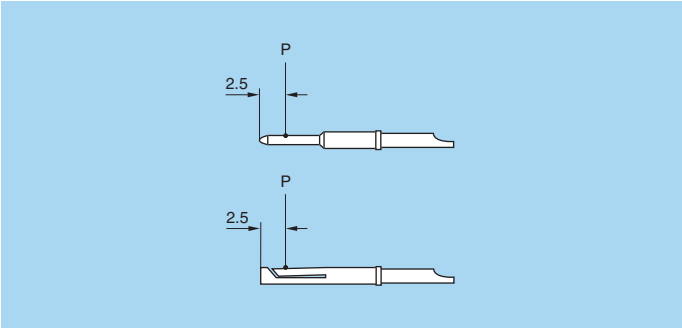

Note: P = inspection point

Contact ø A (mm)	Gold thickness		
	male (µm)	female	
		outside (µm)	inside (%)
0.5	1.0	1.5	65
0.7	1.0	1.5	70
0.9	1.0	1.5	75
1.3	1.0	1.5	75
1.6	1.0	1.5	75
2.0	1.0	1.5	75
3.0	1.0	1.5	75
4.0	1.0	1.5	75
5.0	1.0	1.5	75
6.0	1.0	1.5	75
8.0	1.0	1.5	75
12.0[1]	–	–	–

Notes: [1] contacts are silver plated

Contact resistance with relation to the number of mating cyles

(measured according to IEC 60512-2 test 2a)

Average values measured after the mating cycles and the salt spray test according to IEC 60512-6 test 11f.

A ø (mm)	Contact resistance (mΩ)			A ø (mm)	Contact resistance (mΩ)		
	1000 cycles	3000 cycles	5000 cycles		1000 cycles	3000 cycles	5000 cycles
0.5	7.5	8.3	8.7	3.0	2.0	2.2	3.1
0.7	5.6	5.7	6.1	4.0	1.6	2.0	2.8
0.9	4.1	4.2	4.8	5.0	1.4	–	–
1.3	2.8	2.9	3.6	6.0	1.2	–	–
1.6	2.6	2.7	3.5	8.0	0.8	–	–
2.0	2.9	3.1	3.3	12.0	0.7	–	–

Insulation resistance between the contacts and contact/shell

(measured according to IEC 60512-2 test 3a)

Insulating material	Multipole	Unipole
	PEEK	PTFE
new	> 10^{12} Ω	> 10^{12} Ω
after humidity test[1)]	> 10^{10} Ω	> 10^{10} Ω

Note: [1)] 21 days at 95% RH according to IEC 60068-2-3.

Solder contacts

The conductor bucket of these contacts is machined at an angle to form a cup into which the solder can flow.
See page 7 for the range of cable dimensions that can be soldered.

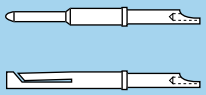

Crimp contacts

The square form crimp method is used (MIL-C-22520F, class I, type 2) photo 1 for unipole contacts.

For multipole contacts the standard four identer crimp method is used, MIL-C-22520F, class I, type 1), photo 2.
The crimp method requires a controlled compression to obtain a symmetrical deformation of the conductor strand and of the contact material. The radial hole in the side of the contact makes it possible to check whether the conductor is correctly positioned within the contact. A good crimping is characterized by only slightly reduced conductor section and practically no gap.
For optimum crimping of bronze or brass contacts they are annealed to relieve internal stress and reduce material hardening during the crimping process.
Only the crimping zone is annealed with the help of an induction heating machine designed by the LEMO Research and Development Department (see photo 3).

Advantages of crimping

- practical, quick contact fixing outside the insulator
- possible use at high temperature
- no risk of heating the insulator during the conductor-contact fixing
- high tensile strength

Crimp contacts are available in standard version (form 1) for mounting maximum size conductors.
For some dimensions, these crimp contacts can be produced with reduced crimp barrels (form 2) for mounting reduced size conductors.

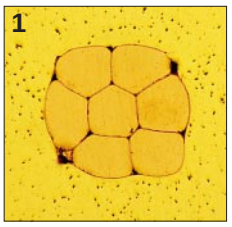

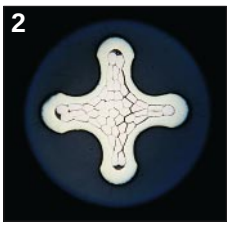

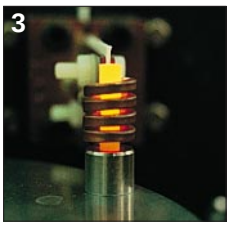

Crimp contacts

The crimp contacts can be with two forms: a standard crimp barrel for large conductors (see fig. 1) or with a reduced crimp barrel for smaller conductors (see fig. 2).

The range of cable dimensions that can be crimped into our contacts are indicated on the table on page 7.

Fig. 1

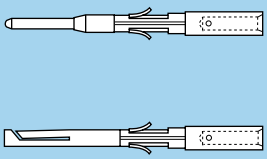

Fig. 2

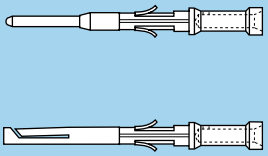

Print contacts

Print contacts are available in straight or elbow versions for certain connector types, mostly for straight and elbow socket models. Connection is made on flexible or rigid printed circuits by soldering.
Straight print contacts are gold-plated which guarantees optimum soldering, even after long-term storage. However for wave soldering, we recommend removal the gold-plating from the contact end on the printed circuit side before soldering according to the assembly procedures.
Print elbow contacts include a tinned lead free brass wire crimped into a crimp contact.

straight

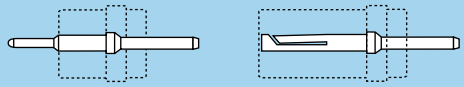

elbow

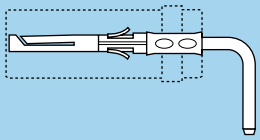

Test voltage

Test voltage (Ue) :
(measured according to the IEC 60512-2 test 4a standard)

It corresponds to 75% of the mean breakdown voltage.
Test voltage is applied at 500 V/s and the test duration is 1 minute.

This test has been carried out with a mated plug and socket, with power supply only on the plug end.

Operating voltage (Us) :
It is proposed according to the following ratio : $Us = \frac{Ue}{3}$

Caution:
For a number of applications, safety requirements for electrical appliances are more severe with regard to operating voltage.
In such cases operating voltage is defined according to creepage distance and air clearance) between live parts.
Please consult us for the choice of a connector by indicating the safety standard to be met by the product.

Voltage values are given in the table on insulator types for each series.
They correspond with values measured at sea level. They are adapted to all applications up to an altitude of 2000 m.

In case a device is used at a higher altitude, air clearance between live parts has to be multiplied by the following coefficients.
It means also that test voltage has to be divided by this coefficient.

altitude (m)	coefficient
2000	1.00
3000	1.14
4000	1.29
5000	1.48

Rated current

(measured according to IEC 60512-3 test 5a)

The specified rated current can be applied simultaneously to all the contacts.
It corresponds with an average temperature rise of 40°C of the connector.

The current values are indicated in the table of insulator types in each series.
For use at higher temperatures acceptable rated current will be lower. It tends towards zero as the material is used at the maximum operating temperature accepted for the insulator.

In most case the current depend on the conductor dimension (see table on page 183) or on the printed circuit dimension.

Caution:
In general, connectors should not be unmated while live.

For connectors with PEEK insulator, maximum admissible current will follow the curve below depending on the operating temperature T.

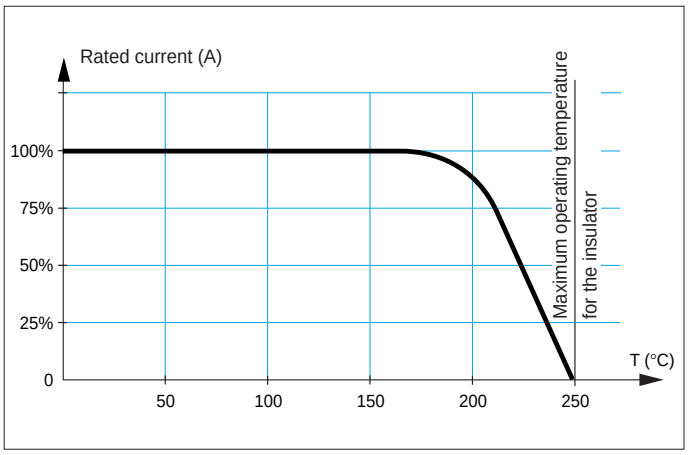

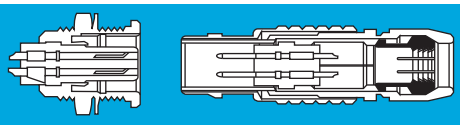

Cable fixing

Cables are fixed into LEMO connectors with cable collet systems. These collets with latches have a design which is very similar to those used for tool machines. This solution guarantees excellent cable retention and ensures perfectly symmetrical deformation of the cable.
The 00 multipole series is also available with hexagonal crimping (MIL-C-22520F).

Material and treatment

Component	Material (standard)	Surface treatment (µm)				
		Nickel[1]		Gold		
		Cu	Ni	Cu	Ni	Au
Center piece	Brass (UNS C 38500)	0.5	3	–	–	–
Collet	Brass (UNS C 38500)	0.5	3	–	–	–
Crimp ferrule	Copper (UNS C 18700)	0.5	3	0.5	3	0.5
Reducer	Brass (UNS C 38500)	0.5	3	–	–	–
Reducing cone	Brass (UNS C 38500)	0.5	3	–	–	–
Earthing cone	Brass (UNS C 38500)	0.5	3	–	–	–
Metal washer	Brass (UNS C 38500)	0.5	3	–	–	–
Gasket	Silicone MQ/MVQ	–				
	FPM (Viton®)[2]					

Notes:
[1] standards for surface treatment are as follows:
– nickel-plated: FS QQ-N-290A.
[2] available upon special request.

Cable clamping system

B series (D and M cable clamping)

See assembly instructions under www.lemo.com.

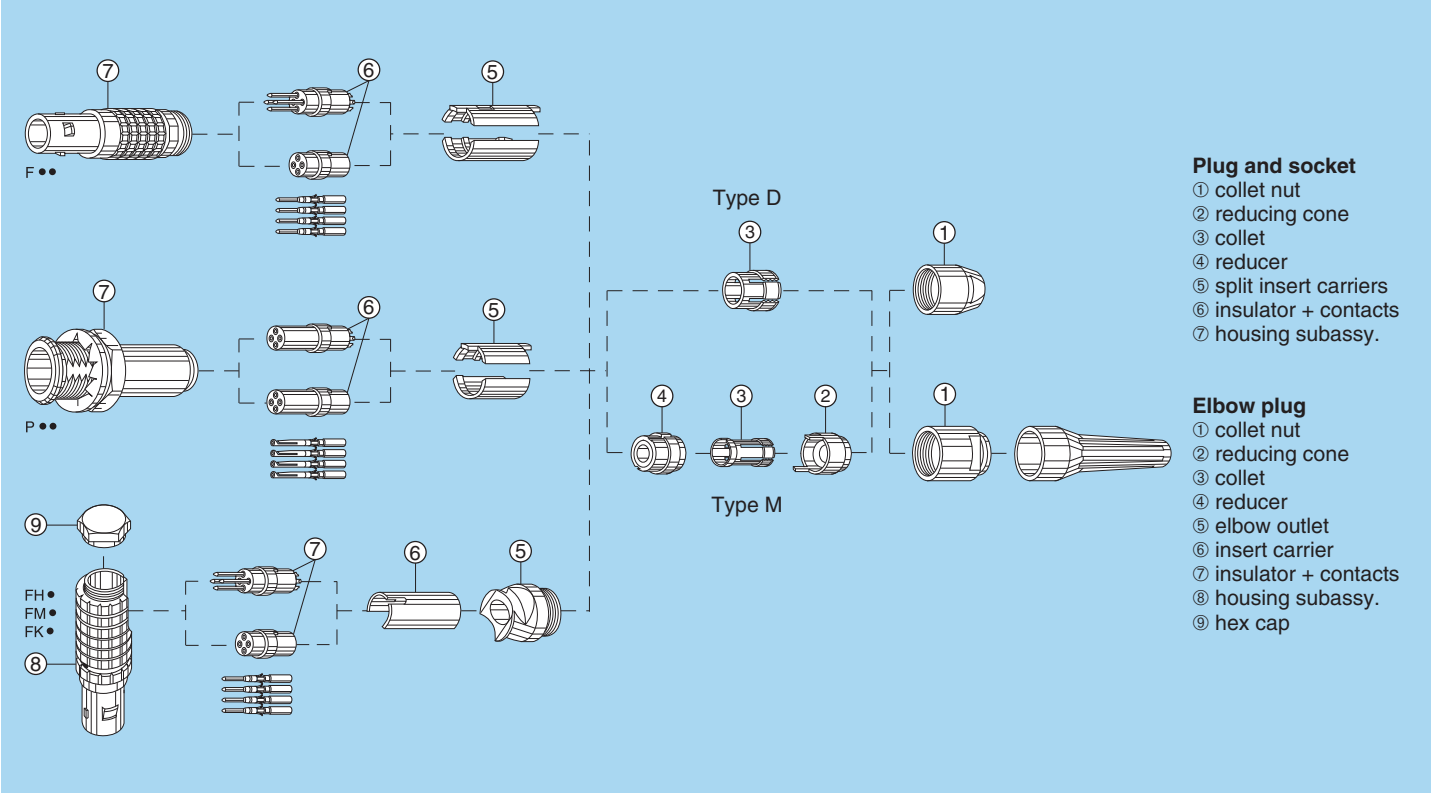

K series (C and K cable clamping)

See assembly instructions under www.lemo.com.

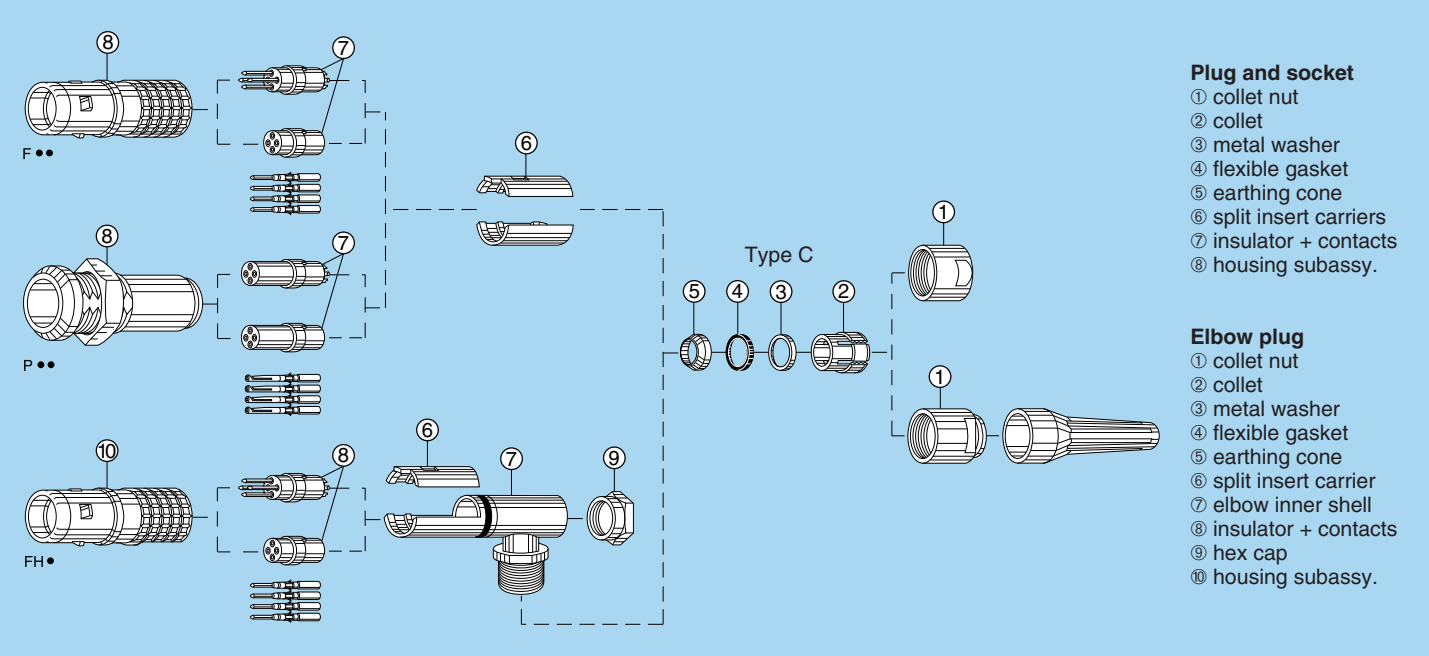

Plug and socket
① collet nut
② collet
③ metal washer
④ flexible gasket
⑤ earthing cone
⑥ split insert carriers
⑦ insulator + contacts
⑧ housing subassy.

Elbow plug
① collet nut
② collet
③ metal washer
④ flexible gasket
⑤ earthing cone
⑥ split insert carrier
⑦ elbow inner shell
⑧ insulator + contacts
⑨ hex cap
⑩ housing subassy.

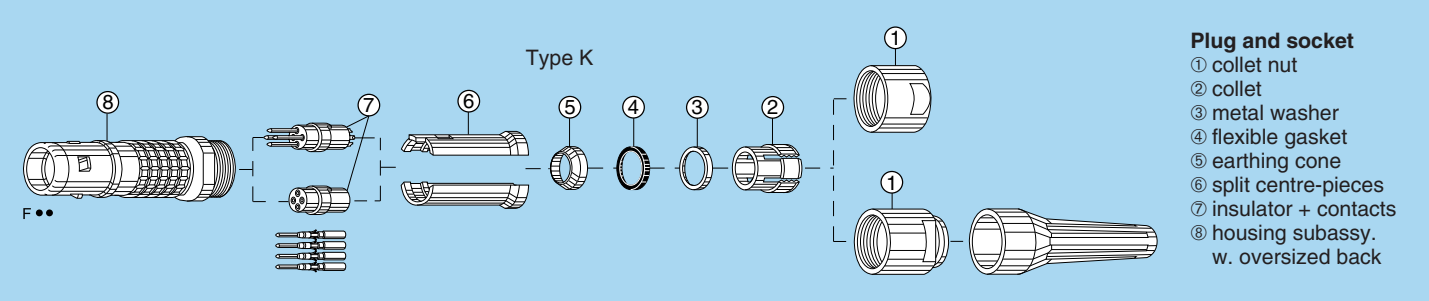

Plug and socket
① collet nut
② collet
③ metal washer
④ flexible gasket
⑤ earthing cone
⑥ split centre-pieces
⑦ insulator + contacts
⑧ housing subassy.
w. oversized back

S series (C, L and K cable clamping)

See assembly instructions under www.lemo.com.

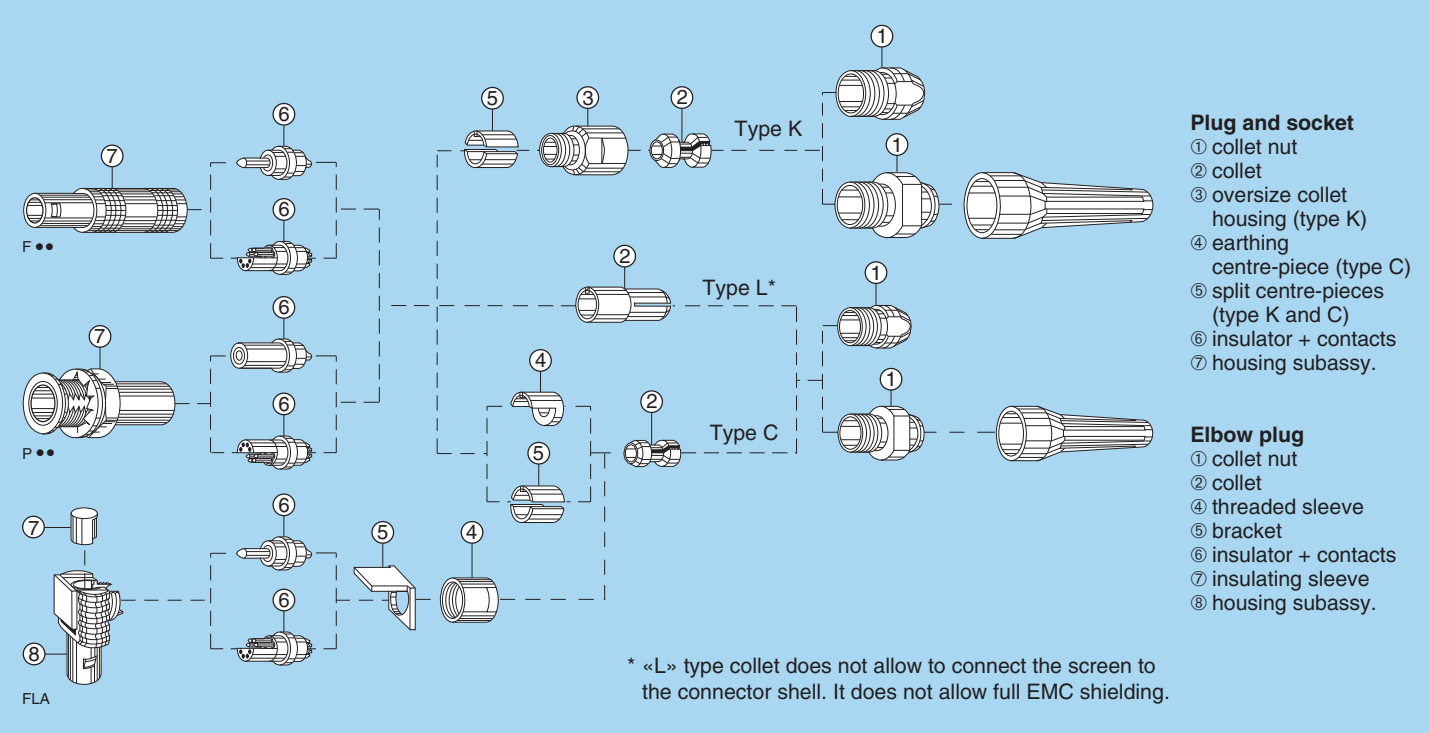

Plug and socket
① collet nut
② collet
③ oversize collet housing (type K)
④ earthing centre-piece (type C)
⑤ split centre-pieces (type K and C)
⑥ insulator + contacts
⑦ housing subassy.

Elbow plug
① collet nut
② collet
④ threaded sleeve
⑤ bracket
⑥ insulator + contacts
⑦ insulating sleeve
⑧ housing subassy.

* «L» type collet does not allow to connect the screen to the connector shell. It does not allow full EMC shielding.

E series (C and K cable clamping)

See assembly instructions under www.lemo.com.

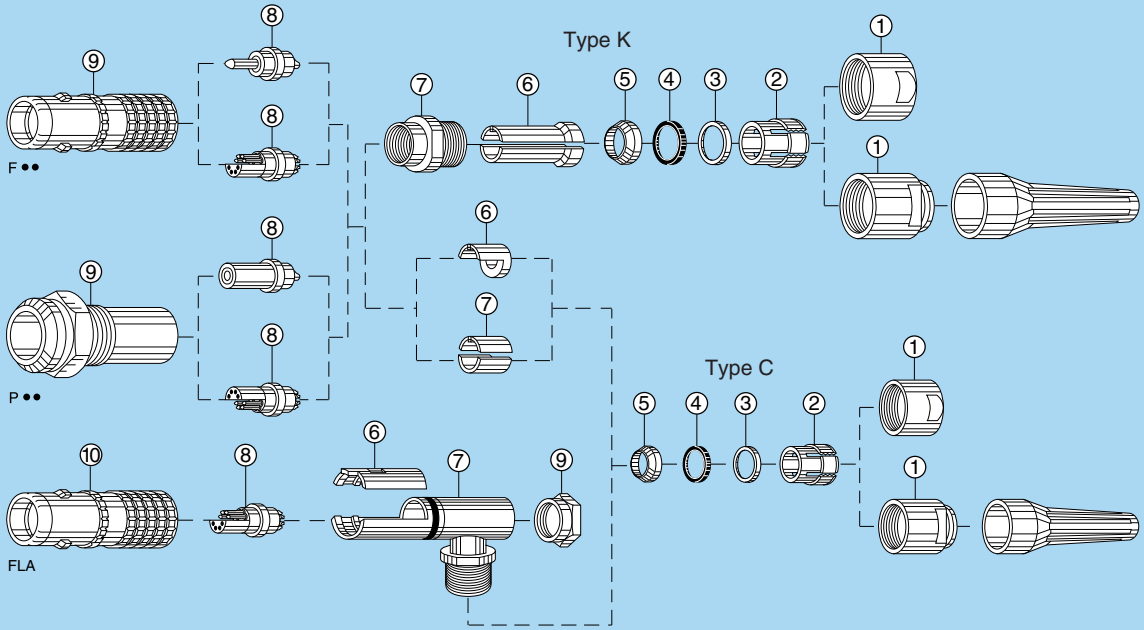

Plug and socket
① collet nut
② collet
③ metal washer
④ flexible gasket
⑤ earthing cone
⑥ split centre-pieces (type K)
⑥ earthing centre-piece (type C)
⑦ oversize collet housing (type K)
⑦ earthing centre-piece (type C)
⑧ insulator + contacts
⑨ housing subassy.

Elbow plug
① collet nut
② collet
③ metal washer
④ flexible gasket
⑤ earthing cone
⑥ split insert carrier
⑦ elbow inner shell
⑧ insulator + contacts
⑨ hex cap
⑩ housing subassy.

Maximum metal collet nut tightening torque

Standard series

	Series									
	00	0S	1D	1S	2C	2S	3S	4S	5S	6S
Torque (Nm)	0.25	0.5	1.5	1.5	2.5	2.5	6	8	10	12

Watertight series

	Series									
	0E	0L	1E	1L	2E	2L	3E	4E	5E	6E
Torque (Nm)	0.7	0.7	0.8	0.8	2	2	3	5	8	12

Keyed series

	Series							
	00	0B	1B	2B	2G	3B	4B	5B
Torque (Nm)	0.25	0.5	1.5	2.5	2.5	4	7	10

Watertight keyed series

	Series					
	0K	1K	2K	3K	4K	5K
Torque (Nm)	0.7	0.8	2	3	5	8

1N = 0.102 kg

Maximum elbow plug hex cap tightening torque

Keyed series

	Series						
	00	0B	1B	2B	3B	4B	5B
Torque (Nm)	0.3	0.6	1	1	1.5	3	5

Watertight series

	Series								
	0E	0L	1E	1L	2E	2L	3E	4E	5E
Torque (Nm)	0.8	0.8	1	1	1.2	1.2	1.5	3	5

Watertight keyed series

	Series					
	0K	1K	2K	3K	4K	5K
Torque (Nm)	0.8	1	1.2	1.5	3	5

1N = 0.102 kg

Maximum plastic collet nut tightening torque [1)]

	Series								
	00	0S	1S	2S	3S	1B	2B	3B	4B
Torque (Nm)	0.15	0.45	0.50	0.50	1.00	0.50	0.50	1.00	1.50

Note:
[1)] For applications subject to strong vibration, we recommend fixing the collet nut with epoxy resin. We recommend to tight to the maximum value. Optimal torque may depend on cable jacket design.

Technical tables

Table of American Wire Gauge

AWG	Construction		ø wire max		Wire section	
	Strand nb	AWG/ strand	(mm)	(in)	(mm^2)	(sq in)
0	259	24	11.277	0.444	52.90	0.0820
1	817	30	9.702	0.382	41.40	0.0641
2	259	26	8.89	0.35	33.20	0.0514
4	133	25	6.9596	0.274	21.5925	0.0335
6	133	27	5.5118	0.217	13.5885	0.0211
8	168	30	4.4450	0.175	8.5127	0.0132
8	133	29	4.3942	0.173	8.6053	0.0133
10	105	30	3.3020	0.13	5.3204	0.0082
10	37	26	2.9210	0.115	4.7397	0.0073
10	1	10	2.6162	0.103	5.2614	0.0082
12	37	28	2.3114	0.091	2.9765	0.0046
12	19	25	2.3622	0.093	3.0847	0.0048
12 [1)]	7	20	2.5400	0.10	3.6321	0.0056
12	1	12	2.0828	0.082	3.3081	0.0051
14	41	30	2.0574	0.081	2.0775	0.0032
14	19	27	1.8542	0.073	1.9413	0.0030
14 [1)]	7	22	2.0828	0.082	2.2704	0.0035
14	1	14	1.6510	0.065	2.0820	0.0032
16 [1)]	65	34	1.5748	0.062	1.3072	0.0020
16	26	30	1.5748	0.062	1.3174	0.0020
16	19	29	1.4986	0.059	1.2293	0.0019
16 [1)]	7	24	1.5494	0.061	1.4330	0.0022
16	1	16	1.3208	0.052	1.3076	0.0020
18 [1)]	65	36	1.2700	0.05	0.8234	0.0013
18 [1)]	42	34	1.2700	0.05	0.8447	0.0013
18	19	30	1.3208	0.052	0.9627	0.0015
18	16	30	1.2954	0.051	0.8107	0.0013
18	7	26	1.2700	0.05	0.8967	0.0014
18	1	18	1.0414	0.041	0.8229	0.0013
20 [1)]	42	36	1.0160	0.04	0.5320	$8.2x10^{-4}$
20	19	32	1.0414	0.041	0.6162	0.0010
20	10	30	1.0160	0.04	0.5067	$7.9x10^{-4}$
20	7	28	0.9906	0.039	0.5631	$8.7x10^{-4}$
20	1	20	0.8382	0.033	0.5189	$8.0x10^{-4}$
22	19	34	0.8382	0.033	0.3821	$5.9x10^{-4}$
22	7	30	0.7874	0.031	0.3547	$5.5x10^{-4}$
22	1	22	0.6604	0.026	0.3243	$5.0x10^{-4}$
24 [1)]	42	40	0.6604	0.026	0.2045	$3.2x10^{-4}$
24	19	36	0.6858	0.027	0.2407	$3.7x10^{-4}$
24	7	32	0.6350	0.025	0.2270	$3.5x10^{-4}$
24	1	24	0.5588	0.022	0.2047	$3.2x10^{-4}$
26	19	38	0.5588	0.022	0.1540	$2.4x10^{-4}$
26	7	34	0.5080	0.02	0.1408	$2.2x10^{-4}$
26	1	26	0.4318	0.017	0.1281	$2.0x10^{-4}$
28 [1)]	19	40	0.4318	0.017	0.0925	$1.4x10^{-4}$
28	7	36	0.4064	0.016	0.0887	$1.4x10^{-4}$
28	1	28	0.3302	0.013	0.0804	$1.2x10^{-4}$
30	7	38	0.3302	0.013	0.0568	$8.8x10^{-5}$
30	1	30	0.2794	0.011	0.0507	$7.9x10^{-5}$
32	7	40	0.2794	0.011	0.0341	$5.3x10^{-5}$
32	1	32	0.2286	0.009	0.0324	$5.0x10^{-5}$
34	1	34	0.1693	0.007	0.0201	$3.1x10^{-5}$
36	1	36	0.127	0.005	0.0127	$2.0x10^{-5}$
38	1	38	0.1016	0.004	0.0081	$1.3x10^{-5}$
40	1	40	0.078	0.003	0.0049	$7.5x10^{-6}$

Table of wire gauges according to IEC-60228 standard

Conductor no x Ø (mm)	Max Ø (mm)	Max Ø (in)	Section (mm^2)	Section (sq in)
196x0.40	7.50	0.295	25.00	0.0387
7x2.14	6.10	0.240	25.00	0.0387
125x0.40	6.00	0.236	16.00	0.0248
7x1.72	4.90	0.192	16.00	0.0248
1x4.50	4.50	0.177	16.00	0.0248
80x0.40	4.70	0.155	10.00	0.0155
7x1.38	3.95	0.155	10.00	0.0155
1x3.60	3.60	0.141	10.00	0.0155
84x0.30	3.70	0.145	6.00	0.0093
7x1.50	3.15	0.124	6.00	0.0093
1x2.76	2.76	0.108	6.00	0.0093
56x0.30	2.80	0.110	4.00	0.0062
7x0.86	2.58	0.098	4.00	0.0062
1x2.25	2.25	0.082	4.00	0.0062
50x0.25	2.15	0.084	2.50	0.0038
7x0.68	2.04	0.080	2.50	0.0038
1x1.78	1.78	0.070	2.50	0.0038
30x0.25	1.60	0.062	1.50	0.0023
7x0.52	1.56	0.061	1.50	0.0023
1x1.4	1.40	0.055	1.50	0.0023
32x0.20	1.35	0.053	1.00	0.0015
7x0.43	1.29	0.050	1.00	0.0015
1x1.15	1.15	0.045	1.00	0.0015
42x0.15	1.20	0.047	0.75	0.0011
28x0.20	1.15	0.045	0.75	0.0011
1x1.0	1.00	0.039	0.75	0.0011
28x0.15	0.95	0.037	0.50	$7.7x10^{-4}$
16x0.20	0.90	0.035	0.50	$7.7x10^{-4}$
1x0.80	0.80	0.031	0.50	$7.7x10^{-4}$
7x0.25	0.75	0.029	0.34	$5.2x10^{-4}$
1x0.60	0.60	0.023	0.28	$4.3x10^{-4}$
14x0.15	0.75	0.029	0.25	$3.8x10^{-4}$
7x0.20	0.65	0.023	0.22	$3.4x10^{-4}$
18x0.10	0.50	0.019	0.14	$2.1x10^{-4}$
14x0.10	0.40	0.015	0.11	$1.7x10^{-4}$
21x0.07	0.40	0.015	0.09	$1.3x10^{-4}$
14x0.10	0.40	0.015	0.09	$1.3x10^{-4}$

Note: [1)] not included in the standard

Maximum current rating for conductor

Maximum current on insulated conductors up to an ambiant temperature of 30° C (from VDE 0100, parts 430 and 532 as well as other VDE regulations).

Nominal section mm^2	Group 2 Intens. max. A	Group 3 Intens. max. A
0.08	1.0	1.5
0.14	2.0	3.0
0.25	4.0	5.0
0.34	6.0	8.0
0.50	9.0	12.0
0.75	12.0	15.0
1.00	15.0	19.0
1.50	18.0	24.0
2.50	26.0	32.0

Group 2 Multi-conductor, e. g. solid cable under sheath, shielded cable, lead-sheath cables, …
Group 3 Single conductor and single conductor cable laid on open air in a way to leave at least a space between them equal to their diameter

Some formulae

Resistance R of a conductor: $R = \rho \bullet \frac{l}{A}\ [\Omega]$

Where: ρ = conductor resistivity
l = conductor length
A = conductor cross-section

Impedance of coaxial line: $Z = \frac{138}{\sqrt{\varepsilon_r}} \bullet \log \frac{D}{d}\ [\Omega]$

ε_r = dielectric constant
D = dielectric outer diameter
d = center conductor outer diameter

Signal attenuation: $\text{Attenuation} = 20 \bullet \log \frac{U_1}{U_2}\ [dB]$

U_1 = input signal voltage
U_2 = output signal voltage

Conversion of some units:

millimeters into inches:	1 mm	= 0.0394 in
inches into millimeters:	1 in	= 25.4 mm
centimeters into feet:	1 cm	= 0.0328 ft
feet (12 in) into centimeters:	1 ft	= 30.48 cm
square centimeters into square inches:	1 cm^2	= 0.155 sq in
square inches into square centimeters:	1 sq in	= 6.4516 cm^2
bar into pounds per square inch:	1 bar	= 14.51 psi
bar into Pascal:	1 bar	= 10^5 Pa
°C into °F:	°F	= °C•1.8 + 32
newtonmeter (Nm) into inch pound (in•lb)	1 Nm	= 8.85 in•lb
mbar•l•s^{-1} into Torr•l•s^{-1}	1 mbar•l•s^{-1}	= 1.33 Torr•l•s^{-1}

Product safety notice

PLEASE READ AND FOLLOW ALL INSTUCTIONS CAREFULLY AND CONSULT ALL RELEVENT NATIONAL AND INTERNATIONAL SAFETY REGULATIONS FOR YOUR APPLICATION.
IMPROPER HANDLING, CABLE ASSEMBLY, OR WRONG USE OF CONNECTORS CAN RESULT IN HAZARDOUS SITUATIONS.

1. **SHOCK AND FIRE HAZARD**
   Incorrect wiring, the use of damaged components, presence of foreign objects (such as metal debris), and / or residue (such as cleaning fluids), can result in short circuits, overheating, and / or risk of electric shock.
   Mated components should never be disconnected while live as this may result in an exposed electric arc and local overheating, resulting in possible damage to components.

2. **HANDLING**
   Connectors and their components should be visually inspected for damage prior to installation and assembly. Suspect components should be rejected or returned to the factory for verification.
   Connector assembly and installation should only be carried out by properly trained personnel. Proper tools must be used during installation and / or assembly in order to obtain safe and reliable performance.

3. **USE**
   Connectors with exposed contacts should never be live (or on the current supply side of a circuit). Under general conditions voltages above 30 VAC and 42 VDC are considered hazardous and proper measures should be taken to eliminate all risk of transmission of such voltages to any exposed metal part of the connector.

4. **TEST AND OPERATING VOLTAGES**
   The maximum admissible operating voltage depends upon the national or international standards in force for the application in question. Air and creepage distances impact the operating voltage; reference values are indicated in the catalog however these may be influenced by PC board design and / or wiring harnesses.
   The test voltage indicated in the catalog is 75% of the mean breakdown voltage; the test is applied at 500 V/s and the test duration is 1 minute.

5. **CE MARKING**
   CE Marking is applied to a complete product or device, and implies that the device complies with one or several European safety directives.
   CE Marking can not be applied to electromechanical components such as connectors.

6. **PRODUCT IMPROVEMENTS**
   The LEMO Group reserves the right to modify and improve to our products or specifications without providing prior notification.

Компания «ЭлектроПласт» предлагает заключение долгосрочных отношений при поставках импортных электронных компонентов на взаимовыгодных условиях!

Наши преимущества:

- Оперативные поставки широкого спектра электронных компонентов отечественного и импортного производства напрямую от производителей и с крупнейших мировых складов;
- Поставка более 17-ти миллионов наименований электронных компонентов;
- Поставка сложных, дефицитных, либо снятых с производства позиций;
- Оперативные сроки поставки под заказ (от 5 рабочих дней);
- Экспресс доставка в любую точку России;
- Техническая поддержка проекта, помощь в подборе аналогов, поставка прототипов;
- Система менеджмента качества сертифицирована по Международному стандарту ISO 9001;
- Лицензия ФСБ на осуществление работ с использованием сведений, составляющих государственную тайну;
- Поставка специализированных компонентов (Xilinx, Altera, Analog Devices, Intersil, Interpoint, Microsemi, Aeroflex, Peregrine, Syfer, Eurofarad, Texas Instrument, Miteq, Cobham, E2V, MA-COM, Hittite, Mini-Circuits,General Dynamics и др.);

Помимо этого, одним из направлений компании «ЭлектроПласт» является направление «Источники питания». Мы предлагаем Вам помощь Конструкторского отдела:

- Подбор оптимального решения, техническое обоснование при выборе компонента;
- Подбор аналогов;
- Консультации по применению компонента;
- Поставка образцов и прототипов;
- Техническая поддержка проекта;
- Защита от снятия компонента с производства.

Как с нами связаться

Телефон: 8 (812) 309 58 32 (многоканальный)
Факс: 8 (812) 320-02-42
Электронная почта: org@eplast1.ru
Адрес: 198099, г. Санкт-Петербург, ул. Калинина, дом 2, корпус 4, литера А.