REVISIONS			
LTR	DESCRIPTION	DATE	APPROVED
D	REVISED PER ECN AD93073		

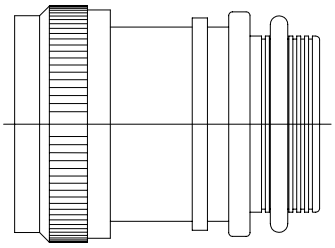

CODE 61 TINEL-LOCK ADAPTER

NOTES:

1. THIS PRODUCT IS DESIGNED TO TERMINATE A BRAIDED CABLE SHIELD AND A HEAT SHRINKABLE LIPPED BOOT TO A CONNECTOR.

2. SEE CH00-0250-008 FOR ORDERING INFORMATION, MODIFICATIONS AND ADDITIONAL DIMENSIONS.

3. SEE DRAWING "TR" FOR DETAILS ON TINEL-LOCK RING. RINGS ARE DESIGNED TO BE HEATED ELECTRICALLY. ALL RINGS ARE MARKED WITH THERMOCHROMIC PAINT WHICH CHANGES COLOR WHEN INSTALLATION TEMPERATURE IS REACHED.

4. ADAPTER TO BE PERMANENTLY MARKED WITH CODE IDENT. NO. AND PART NO. LESS RING DESIGNATOR (E.G.: 06090-TXR61AB00-1206). RINGS SHALL BEAR NO MARKING.

5. FOR LARGER ENTRY SIZES, A 2 PIECE ADAPTER (TYPE II) IS SUPPLIED.

6. ADAPTER MATES TO MIL-C-81511, SERIES 1, 2, 3 AND 4, CLASS A, C, E, F, P AND T, M81511/1, /5, /6, /21, /23, /25, /26, /31, /32, /33, /34, /35, /36, /37, /38, /4 /45, /46, /49, /51, /53, /55 AND /56 CONNECTORS.

7. THESE DIMENSIONS APPLY IF A SELF-LOCKING COUPLING NUT IS USED. (MOD. CODE "S").

If this document is printed it becomes uncontrolled.
Check for the latest revision.

SPECIFICATION CONTROL DRAWING

UNLESS OTHERWISE SPECIFIED DIMENSIONS ARE IN INCHES. METRIC DIMENSIONS ARE IN BRACKETS.

DECIMALS
.XXX ± —— [mm]
.XX ± —— [mm]
.X ± —— [mm]

ANGLES
.X ± ——

DRAWN E. GOLDY	DATE 07-23-93	tyco Electronics	Tyco Electronics Corporation, 300 Constitution Drive, Menlo Park, CA. 94025 U.S.A.	Raychem
CHECKED	DATE		
APPROVED	DATE	TITLE TINEL-LOCK™ ADAPTER	
APPROVED	DATE		
CAD NAME \ACAD12\TXR61			

THIRD ANGLE PROJECTION

SIZE	CODE IDENT. NO.	DWG. NO.	REV
A	06090	TXR61	D

DO NOT SCALE THIS DWG — SHEET 1 OF 3

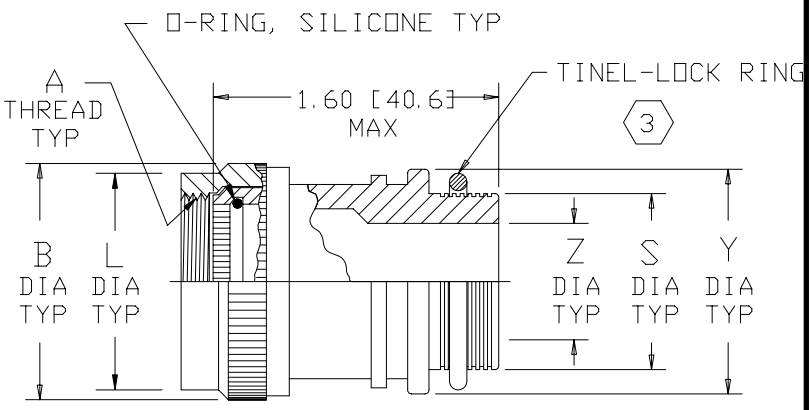

STRAIGHT ADAPTER-TYPE I

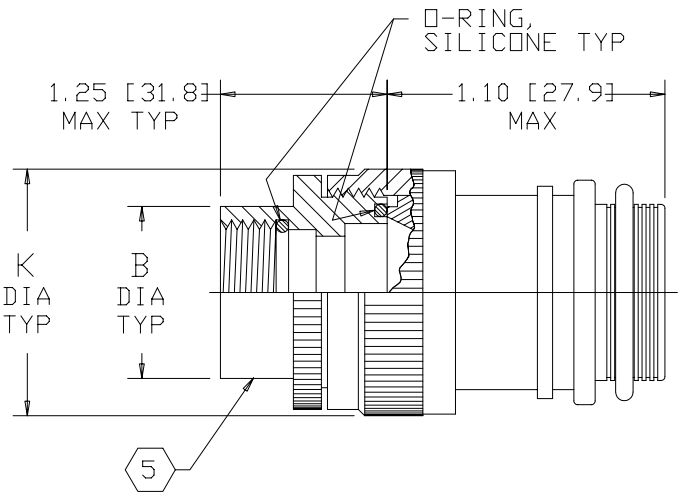

STRAIGHT ADAPTER-TYPE II

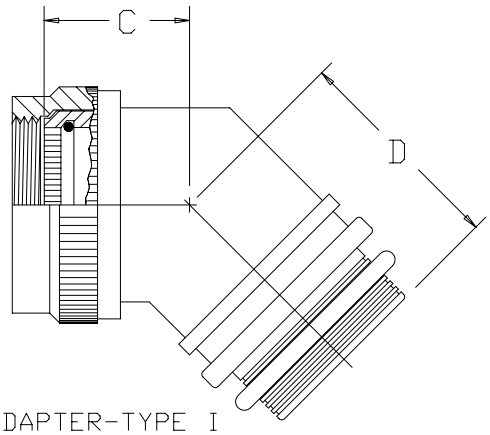

45° ADAPTER-TYPE I

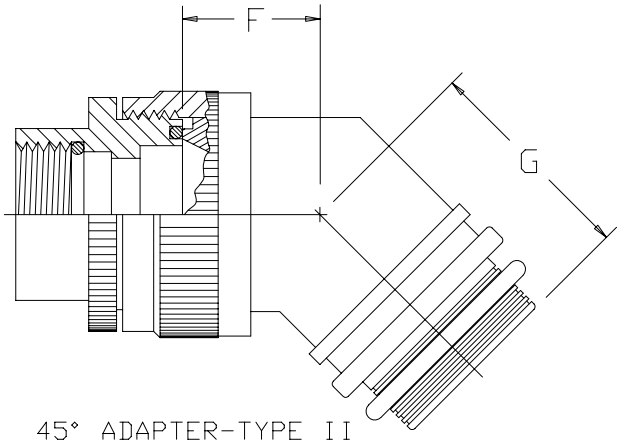

45° ADAPTER-TYPE II

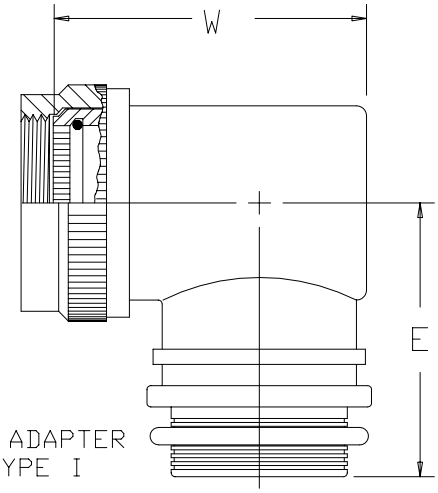

90° ADAPTER TYPE I

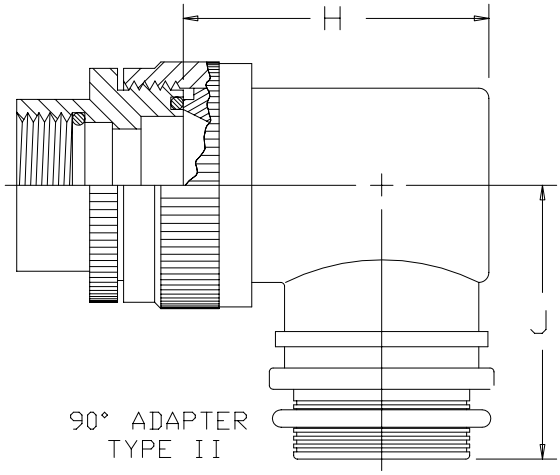

90° ADAPTER TYPE II

If this document is printed it becomes uncontrolled.
Check for the latest revision.

SIZE	CODE IDENT. NO.	DWG. NO.	REV
A	06090	TXR61	D
DO NOT SCALE THIS DWG		CAD NAME \ACAD12\TXR61-2	SHEET 2 OF 3

TABLE I

ORDER NO.	SHELL SIZE (6) COML	SHELL SIZE (6) MIL	MAX ENTRY SIZE (5) TYPE I	A UNIFIED THD CLASS 2B	B DIA MAX	B (7) DIA MAX	C MAX	D MAX	E MAX	L MAX
08	8	A	06	.500-28 UNEF	.86 [21.8]	1.05 [26.7]	1.10 [27.9]	.93 [23.6]	1.18 [30.0]	.57 [14.5]
10	10	B	08	.625-28 UN	.98 [24.9]	1.17 [29.7]	1.12 [28.4]	.96 [24.4]	1.25 [31.8]	.70 [17.8]
14	14	D	12	.875-28 UN	1.23 [31.2]	1.42 [36.1]	1.18 [30.0]	1.00 [25.4]	1.37 [34.8]	.95 [24.1]
16	16	E	14	1.000-28 UN	1.36 [34.5]	1.55 [39.4]	1.20 [30.5]	1.02 [25.9]	1.44 [36.6]	1.07 [27.2]
18	18	F	16	1.125-28 UN	1.48 [37.6]	1.67 [42.4]	1.23 [31.2]	1.05 [26.7]	1.50 [38.1]	1.20 [30.5]
20	20	G	18	1.250-28 UN	1.63 [41.4]	1.82 [46.2]	1.25 [31.8]	1.08 [27.4]	1.57 [39.9]	1.32 [33.5]
22	22	H	20	1.375-28 UN	1.73 [43.9]	1.92 [48.8]	1.28 [32.5]	1.10 [27.9]	1.62 [41.1]	1.45 [36.8]
24	24	J	22	1.500-28 UN	1.86 [47.2]	2.05 [52.0]	1.30 [33.0]	1.14 [29.0]	1.68 [42.7]	1.57 [39.9]

TABLE II

ENTRY SIZE	Z +.010 -.020	S DIA	Y ±.015 [±0.38]	W MAX	F MAX	G MAX	H MAX	J MAX	K MAX
04	.250 [6.35]	.376 [9.56] .370 [9.39]	.550 [13.97]	1.39 [35.3]	N/A	N/A	N/A	N/A	N/A
05	.312 [7.92]	.438 [11.13] .432 [10.97]	.612 [15.54]	1.46 [37.1]	N/A	N/A	N/A	N/A	N/A
06	.375 [9.52]	.501 [12.73] .495 [12.57]	.675 [17.14]	1.52 [38.6]	N/A	N/A	N/A	N/A	N/A
07	.437 [11.09]	.563 [14.31] .556 [14.12]	.737 [18.71]	1.58 [40.1]	.80 [20.3]	.95 [24.1]	1.38 [35.1]	1.22 [31.0]	.92 [23.4]
08	.500 [12.70]	.626 [15.91] .619 [15.72]	.800 [20.32]	1.64 [41.7]	.80 [20.3]	.95 [24.1]	1.38 [35.1]	1.22 [31.0]	.92 [23.4]
10	.625 [15.87]	.752 [19.11] .742 [18.84]	.925 [23.49]	1.77 [45.0]	.84 [21.3]	1.00 [25.4]	1.51 [38.4]	1.35 [34.3]	1.18 [30.0]
12	.750 [19.05]	.877 [22.28] .867 [22.02]	1.050 [26.67]	1.89 [48.0]	.86 [21.8]	1.01 [25.7]	1.63 [41.4]	1.40 [35.6]	1.35 [34.3]
14	.875 [22.23]	1.002 [25.46] .991 [25.17]	1.175 [29.84]	2.02 [51.3]	.88 [22.4]	1.04 [26.4]	1.78 [45.2]	1.46 [37.1]	1.41 [35.8]
16	1.000 [25.40]	1.127 [28.63] 1.116 [28.34]	1.300 [33.02]	2.14 [54.4]	.91 [23.1]	1.06 [26.9]	1.88 [47.8]	1.53 [38.9]	1.60 [40.6]
18	1.125 [28.57]	1.252 [31.81] 1.241 [31.52]	1.425 [36.19]	2.27 [57.7]	.93 [23.6]	1.09 [27.7]	2.01 [51.1]	1.59 [40.4]	1.66 [42.2]
20	1.250 [31.75]	1.377 [34.98] 1.366 [34.69]	1.550 [39.37]	2.39 [60.7]	.98 [24.9]	1.13 [28.7]	2.13 [54.1]	1.78 [45.2]	2.04 [51.8]
22	1.375 [34.93]	1.502 [38.15] 1.488 [37.79]	1.675 [42.55]	2.62 [66.5]	1.03 [26.2]	1.38 [35.1]	2.29 [58.2]	1.85 [47.0]	2.23 [56.6]
24	1.500 [38.10]	1.627 [41.33] 1.613 [40.97]	1.800 [45.72]	N/A	1.08 [27.4]	1.44 [36.6]	2.42 [61.5]	1.92 [48.8]	2.23 [56.6]

If this document is printed it becomes uncontrolled.
Check for the latest revision.

Компания «ЭлектроПласт» предлагает заключение долгосрочных отношений при поставках импортных электронных компонентов на взаимовыгодных условиях!

Наши преимущества:

- Оперативные поставки широкого спектра электронных компонентов отечественного и импортного производства напрямую от производителей и с крупнейших мировых складов;
- Поставка более 17-ти миллионов наименований электронных компонентов;
- Поставка сложных, дефицитных, либо снятых с производства позиций;
- Оперативные сроки поставки под заказ (от 5 рабочих дней);
- Экспресс доставка в любую точку России;
- Техническая поддержка проекта, помощь в подборе аналогов, поставка прототипов;
- Система менеджмента качества сертифицирована по Международному стандарту ISO 9001;
- Лицензия ФСБ на осуществление работ с использованием сведений, составляющих государственную тайну;
- Поставка специализированных компонентов (Xilinx, Altera, Analog Devices, Intersil, Interpoint, Microsemi, Aeroflex, Peregrine, Syfer, Eurofarad, Texas Instrument, Miteq, Cobham, E2V, MA-COM, Hittite, Mini-Circuits,General Dynamics и др.);

Помимо этого, одним из направлений компании «ЭлектроПласт» является направление «Источники питания». Мы предлагаем Вам помощь Конструкторского отдела:

- Подбор оптимального решения, техническое обоснование при выборе компонента;
- Подбор аналогов;
- Консультации по применению компонента;
- Поставка образцов и прототипов;
- Техническая поддержка проекта;
- Защита от снятия компонента с производства.

Как с нами связаться

Телефон: 8 (812) 309 58 32 (многоканальный)
Факс: 8 (812) 320-02-42
Электронная почта: org@eplast1.ru
Адрес: 198099, г. Санкт-Петербург, ул. Калинина, дом 2, корпус 4, литера А.