7SB3125

Bus Switch

The 7SB3125 Bus Switch is an advanced high−speed line switch in ultra−small footprint.

Features

- High Speed: t_{PD} = 0.25 ns (Max) @ V_{CC} = 4.5 V
- 3 Ω Switch Connection Between 2 Ports
- Power Down Protection Provided on Inputs
- Ultra−Small Packages
- These are Pb−Free Devices

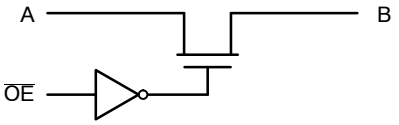

Figure 1. Logic Diagram

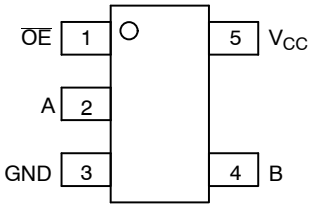

Figure 2. TSOP−5/SC−88A (Top View)

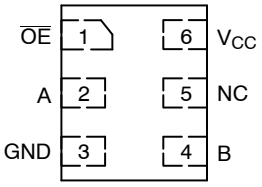

Figure 3. ULLGA6/UDFN6 (Top View)

Function Table

Input $\overline{OE}$	Function
L	B = A
H	Disconnect

ON Semiconductor®

http://onsemi.com

MARKING DIAGRAMS

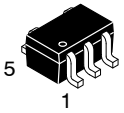

SOT−353/SC70−5/SC−88A
DF SUFFIX
CASE 419A

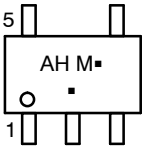

SOT23−5/TSOP−5/SC59−5
DT SUFFIX
CASE 483

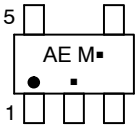

ULLGA6
1.0 x 1.0
CASE 613AD

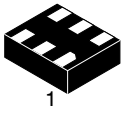

ULLGA6
1.2 x 1.0
CASE 613AE

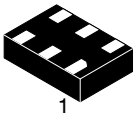

ULLGA6
1.45 x 1.0
CASE 613AF

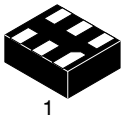

UDFN6
1.2 x 1.0
CASE 517AA

AH, AE, F, A, 6, J = Specific Device Code
M = Date Code
▪ = Pb−Free Package

(Note: Microdot may be in either location)

ORDERING INFORMATION

See detailed ordering and shipping information in the package dimensions section on page 4 of this data sheet.

© Semiconductor Components Industries, LLC, 2010

Table 1. MAXIMUM RATINGS

Symbol	Parameter		Value	Unit
V_{CC}	DC Supply Voltage		−0.5 to +7.0	V
V_{IN}	Control Pin Input Voltage		−0.5 to +7.0	V
$V_{I/O}$	Switch Input / Output Voltage		−0.5 to +7.0	V
I_{IK}	Control Pin DC Input Diode Current	V_{IN} < GND	−50	mA
I_{OK}	Switch I/O Port DC Diode Current	$V_{I/O}$ < GND	−50	mA
I_O	On−State Switch Current		±128	mA
	Continuous Current Through V_{CC} or GND		±150	mA
I_{CC}	DC Supply Current per Supply Pin		±150	mA
I_{GND}	DC Ground Current per Ground Pin		±150	mA
T_{STG}	Storage Temperature Range		−65 to +150	°C
T_L	Lead Temperature, 1 mm from Case for 10 Seconds		260	°C
T_J	Junction Temperature Under Bias		150	°C
θ_{JA}	Thermal Resistance	SC70−5/SC−88A (Note 1) TSOP−5 ULLGA6/UDFN6	350 230 496	°C/W
P_D	Power Dissipation in Still Air at 85°C	SC70−5/SC−88A (Note 1) TSOP−5 ULLGA6/UDFN6	150 200 252	mW
MSL	Moisture Sensitivity		Level 1	
F_R	Flammability Rating	Oxygen Index: 28 to 34	UL 94 V−0 @ 0.125 in	
V_{ESD}	ESD Withstand Voltage	Human Body Mode (Note 2) Machine Mode (Note 3) Charged Device Mode (Note 4)	>2000 >200 N/A	V
$I_{LATCHUP}$	Latchup Performance Above V_{CC} and Below GND at 85°C (Note 5)		±100	mA

Stresses exceeding Maximum Ratings may damage the device. Maximum Ratings are stress ratings only. Functional operation above the Recommended Operating Conditions is not implied. Extended exposure to stresses above the Recommended Operating Conditions may affect device reliability.

1. Measured with minimum pad spacing on an FR4 board, using 10 mm−by−1 inch, 2 ounce copper trace no air flow.
2. Tested to EIA/ JESD22−A114−A
3. Tested to EIA/ JESD22−A115−A
4. Tested to JESD22−C101−A
5. Tested to EIA / JESD78.

Table 2. RECOMMENDED OPERATING CONDITIONS

Symbol	Parameter		Min	Max	Unit
V_{CC}	Positive DC Supply Voltage		4.0	5.5	V
V_I	Control Pin Input Voltage		0	5.5	V
$V_{I/O}$	Switch Input / Output Voltage		0	5.5	V
T_A	Operating Free−Air Temperature		−55	+125	°C
$\Delta t / \Delta V$	Input Transition Rise or Fall Rate	Control Input Switch I/O	0 0	5 DC	nS/V

Table 3. DC ELECTRICAL CHARACTERISTICS

Symbol	Parameter	Conditions	V_{CC} (V)	T_A = 25°C			T_A = −55°C to +125°C		Unit
				Min	Typ	Max	Min	Max	
V_{IK}	Clamp Diode Voltage	I_{IN} = −18 mA	4.5			−1.2		−1.2	V
V_{IH}	High−Level Input Voltage (Control)		4.0 to 5.5	2.0			2.0		V
V_{IL}	Low−Level Input Voltage (Control)		4.0 to 5.5			0.8		0.8	V
I_{IN}	Input Leakage Current	$0 \le V_{IN} \le 5.5$ V	5.5			±0.1		±1.0	μA
I_{OFF}	Power Off Leakage Current	$V_{I/O}$ = 0 to 5.5 V	0			±0.1		±1.0	μA
I_{CC}	Quiescent Supply Current	I_O = 0, V_{IN} = V_{CC} or 0 V	5.5			±0.1		±1.0	μA
ΔI_{CC}	Increase in Supply Current (Control Pin)	One input at 3.4 V; Other inputs at V_{CC} or GND	5.5					2.5	mA
R_{ON}	Switch ON Resistance	$V_{I/O}$ = 0, $I_{I/O}$ = 64 mA $I_{I/O}$ = 30 mA	4.5		 3 3	 7 7		 7 7	Ω
		$V_{I/O}$ = 2.4, $I_{I/O}$ = 15 mA	4.5		6	15		15	
		$V_{I/O}$ = 2.4, $I_{I/O}$ = 15 mA	4.0		10	20		20	

Table 4. AC ELECTRICAL CHARACTERISTICS

Symbol	Parameter	V_{CC} (V)	Test Condition	T_A = 25°C			T_A = −55°C to +125°C		Unit
				Min	Typ	Max	Min	Max	
t_{PD}	Propagation Delay, A to B or B to A	4.0 to 5.5	See Figure 3			0.25		0.25	ns
						0.25		0.25	
t_{EN}	Output Enable Time	4.5 to 5.5		0.8	2.5	4.2	0.8	4.2	ns
		4.0		0.8	3.0	4.6	0.8	4.6	
t_{DIS}	Output Disable Time	4.5 to 5.5		0.8	3.1	4.8	0.8	4.8	ns
		4.0		0.8	2.9	4.4	0.8	4.4	
C_{IN}	Control Input Capacitance	5.0	V_{IN} = 3 V or 0		2.0				pF
$C_{IO(ON)}$	Switch On Capacitance	5.0	Switch ON		10				pF
$C_{IO(OFF)}$	Switch Off Capacitance	5.0	Switch OFF		3.5				pF

AC Loading and Waveforms

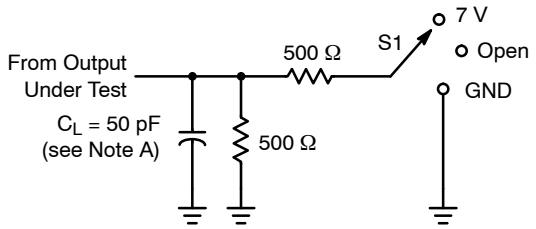

LOAD CIRCUIT

TEST	S1
t_{PD} t_{PLZ}/t_{PZL} t_{PHZ}/t_{PZH}	Open 7 V GND

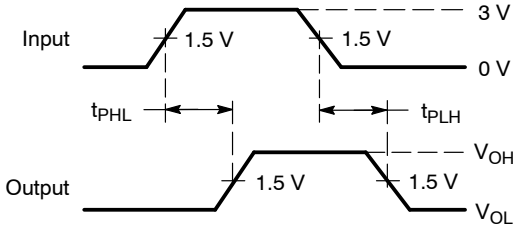

VOLTAGE WAVEFORMS
PROPAGATION DELAY TIMES

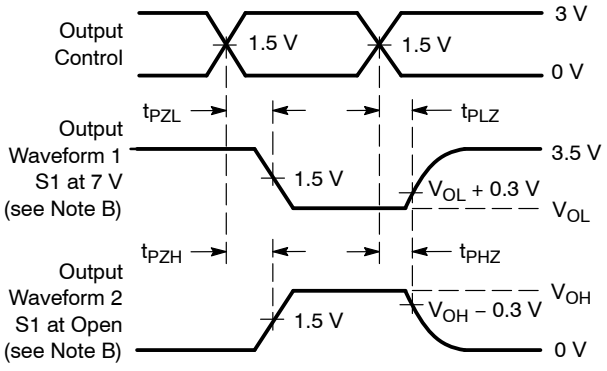

VOLTAGE WAVEFORMS
ENABLE AND DISABLE TIMES

A. C_L includes probe and jig capacitance.
B. Waveform 1 is for an output with internal conditions such that the output is low, except when disabled by the output control.
Waveform 2 is for an output with internal conditions such that the output is high, except when disabled by the output control.
C. All input pulses are supplied by generators having the following characteristics: PRR ≤ 10 MHz, Z_O = 50 Ω, t_r ≤ 2.5 ns, t_f ≤ 2.5 ns.
D. The output is measured with one input transition per measurement.
E. t_{PLZ} and t_{PHZ} are the same as t_{dis}.
F. t_{PZL} and t_{PZH} are the same as t_{en}.
G. t_{PLH} and t_{PHL} are the same as t_{pd}.

Figure 4. Load Circuit and Voltage Waveforms

DEVICE ORDERING INFORMATION

Device	Package	Shipping†
7SB3125DTT1G	TSOP−5 (Pb−Free)	3000 / Tape & Reel
7SB3125DFT2G	SC−88A (Pb−Free)	3000 / Tape & Reel
7SB3125AMX1TCG	ULLGA6 − 0.5 mm Pitch (Pb−Free)	3000 / Tape & Reel
7SB3125BMX1TCG	ULLGA6 − 0.4 mm Pitch (Pb−Free)	3000 / Tape & Reel
7SB3125CMX1TCG	ULLGA6 − 0.35 mm Pitch (Pb−Free)	3000 / Tape & Reel
7SB3125MUTCG	UDFN6 − 0.4 mm Pitch (Pb−Free)	3000 / Tape & Reel

†For information on tape and reel specifications, including part orientation and tape sizes, please refer to our Tape and Reel Packaging Specifications Brochure, BRD8011/D.

PACKAGE DIMENSIONS

SC−88A, SOT−353, SC−70
CASE 419A−02
ISSUE J

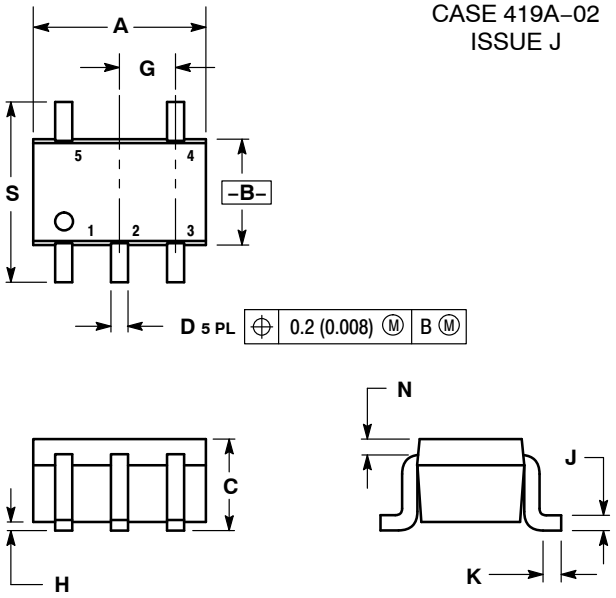

NOTES:
1. DIMENSIONING AND TOLERANCING PER ANSI Y14.5M, 1982.
2. CONTROLLING DIMENSION: INCH.
3. 419A−01 OBSOLETE. NEW STANDARD 419A−02.
4. DIMENSIONS A AND B DO NOT INCLUDE MOLD FLASH, PROTRUSIONS, OR GATE BURRS.

	INCHES		MILLIMETERS	
DIM	MIN	MAX	MIN	MAX
A	0.071	0.087	1.80	2.20
B	0.045	0.053	1.15	1.35
C	0.031	0.043	0.80	1.10
D	0.004	0.012	0.10	0.30
G	0.026 BSC		0.65 BSC	
H	---	0.004	---	0.10
J	0.004	0.010	0.10	0.25
K	0.004	0.012	0.10	0.30
N	0.008 REF		0.20 REF	
S	0.079	0.087	2.00	2.20

PACKAGE DIMENSIONS

TSOP−5
CASE 483−02
ISSUE H

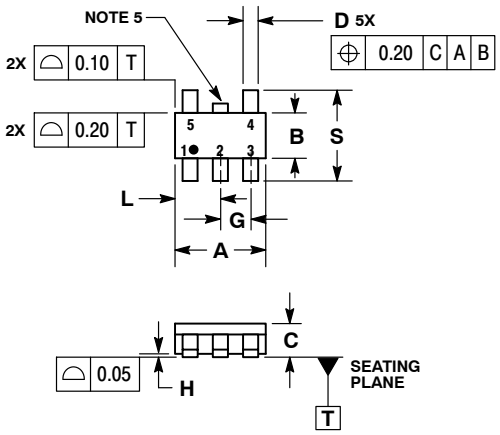

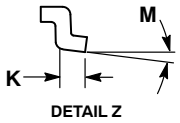

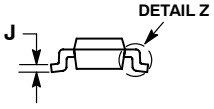

NOTES:
1. DIMENSIONING AND TOLERANCING PER ASME Y14.5M, 1994.
2. CONTROLLING DIMENSION: MILLIMETERS.
3. MAXIMUM LEAD THICKNESS INCLUDES LEAD FINISH THICKNESS. MINIMUM LEAD THICKNESS IS THE MINIMUM THICKNESS OF BASE MATERIAL.
4. DIMENSIONS A AND B DO NOT INCLUDE MOLD FLASH, PROTRUSIONS, OR GATE BURRS.
5. OPTIONAL CONSTRUCTION: AN ADDITIONAL TRIMMED LEAD IS ALLOWED IN THIS LOCATION. TRIMMED LEAD NOT TO EXTEND MORE THAN 0.2 FROM BODY.

	MILLIMETERS	
DIM	MIN	MAX
A	3.00 BSC	
B	1.50 BSC	
C	0.90	1.10
D	0.25	0.50
G	0.95 BSC	
H	0.01	0.10
J	0.10	0.26
K	0.20	0.60
L	1.25	1.55
M	0 °	10 °
S	2.50	3.00

SOLDERING FOOTPRINT*

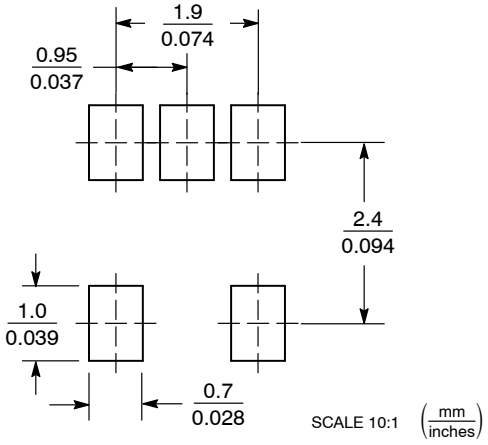

*For additional information on our Pb−Free strategy and soldering details, please download the ON Semiconductor Soldering and Mounting Techniques Reference Manual, SOLDERRM/D.

PACKAGE DIMENSIONS

UDFN6 1.2x1.0, 0.4P
CASE 517AA−01
ISSUE C

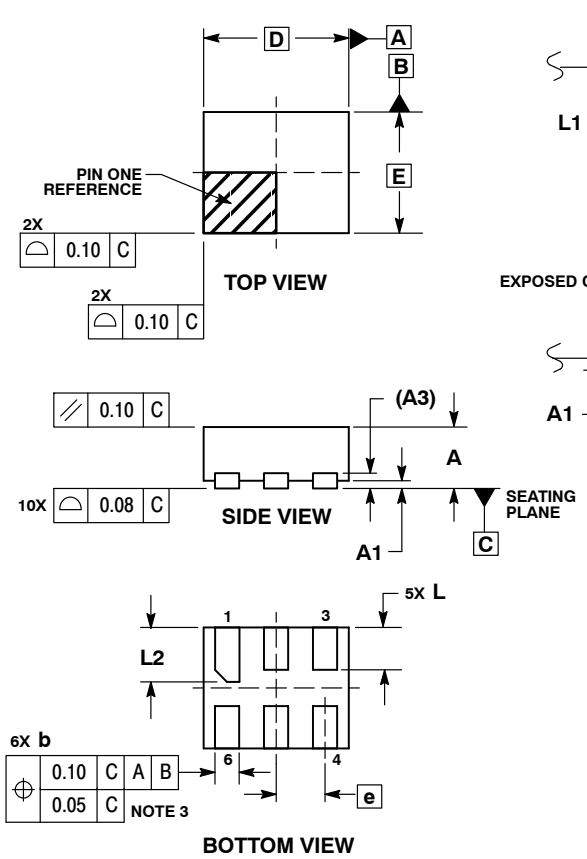

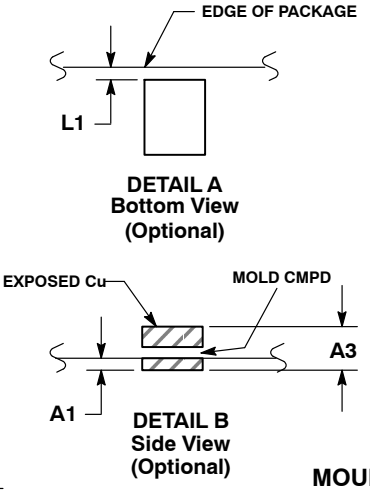

NOTES:
1. DIMENSIONING AND TOLERANCING PER ASME Y14.5M, 1994.
2. CONTROLLING DIMENSION: MILLIMETERS.
3. DIMENSION b APPLIES TO PLATED TERMINAL AND IS MEASURED BETWEEN 0.25 AND 0.30 mm FROM TERMINAL.
4. COPLANARITY APPLIES TO THE EXPOSED PAD AS WELL AS THE TERMINALS.

	MILLIMETERS	
DIM	MIN	MAX
A	0.45	0.55
A1	0.00	0.05
A3	0.127 REF	
b	0.15	0.25
D	1.20 BSC	
E	1.00 BSC	
e	0.40 BSC	
L	0.30	0.40
L1	0.00	0.15
L2	0.40	0.50

MOUNTING FOOTPRINT*

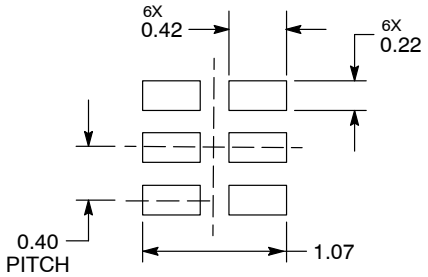

DIMENSIONS: MILLIMETERS

*For additional information on our Pb−Free strategy and soldering details, please download the ON Semiconductor Soldering and Mounting Techniques Reference Manual, SOLDERRM/D.

PACKAGE DIMENSIONS

ULLGA6 1.0x1.0, 0.35P
CASE 613AD−01
ISSUE A

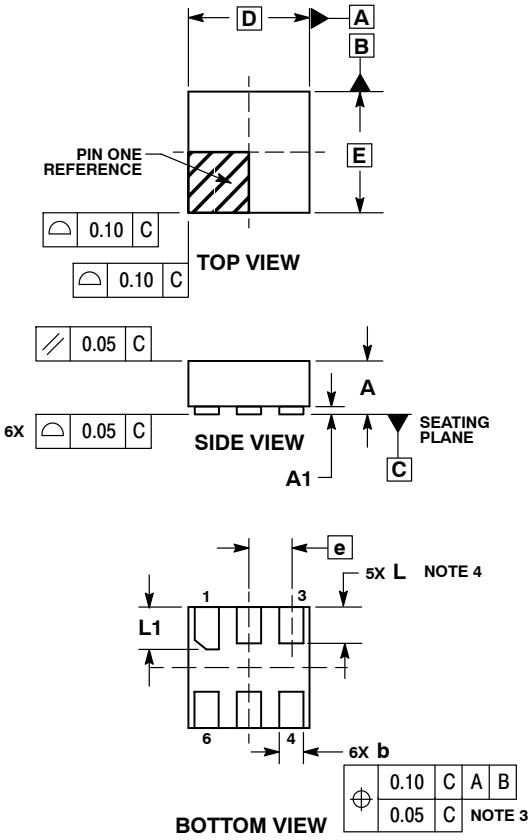

NOTES:
1. DIMENSIONING AND TOLERANCING PER ASME Y14.5M, 1994.
2. CONTROLLING DIMENSION: MILLIMETERS.
3. DIMENSION b APPLIES TO PLATED TERMINAL AND IS MEASURED BETWEEN 0.15 AND 0.30 mm FROM THE TERMINAL TIP.
4. A MAXIMUM OF 0.05 PULL BACK OF THE PLATED TERMINAL FROM THE EDGE OF THE PACKAGE IS ALLOWED.

	MILLIMETERS	
DIM	MIN	MAX
A	−−−	0.40
A1	0.00	0.05
b	0.12	0.22
D	1.00 BSC	
E	1.00 BSC	
e	0.35 BSC	
L	0.25	0.35
L1	0.30	0.40

MOUNTING FOOTPRINT SOLDERMASK DEFINED*

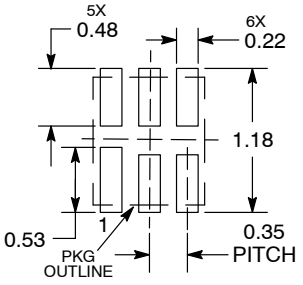

DIMENSIONS: MILLIMETERS

*For additional information on our Pb−Free strategy and soldering details, please download the ON Semiconductor Soldering and Mounting Techniques Reference Manual, SOLDERRM/D.

PACKAGE DIMENSIONS

ULLGA6 1.2x1.0, 0.4P
CASE 613AE−01
ISSUE A

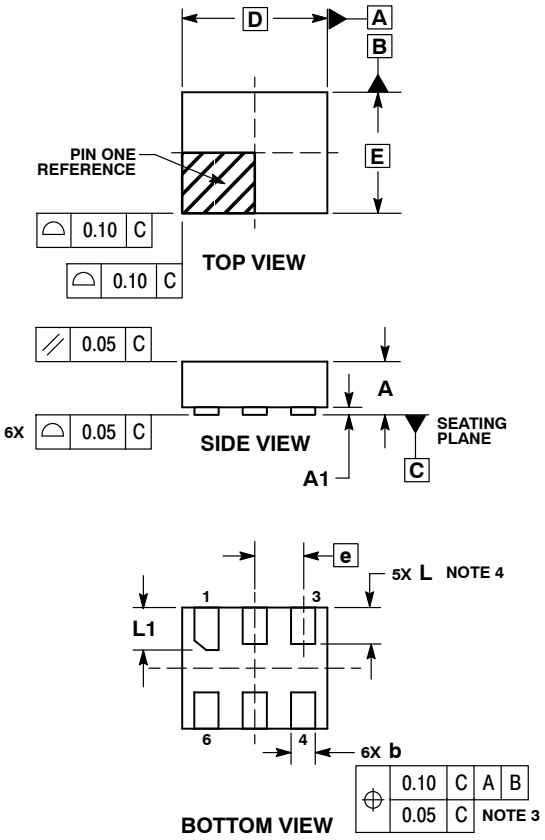

NOTES:
1. DIMENSIONING AND TOLERANCING PER ASME Y14.5M, 1994.
2. CONTROLLING DIMENSION: MILLIMETERS.
3. DIMENSION b APPLIES TO PLATED TERMINAL AND IS MEASURED BETWEEN 0.15 AND 0.30 mm FROM THE TERMINAL TIP.
4. A MAXIMUM OF 0.05 PULL BACK OF THE PLATED TERMINAL FROM THE EDGE OF THE PACKAGE IS ALLOWED.

	MILLIMETERS	
DIM	MIN	MAX
A	---	0.40
A1	0.00	0.05
b	0.15	0.25
D	1.20 BSC	
E	1.00 BSC	
e	0.40 BSC	
L	0.25	0.35
L1	0.35	0.45

MOUNTING FOOTPRINT SOLDERMASK DEFINED*

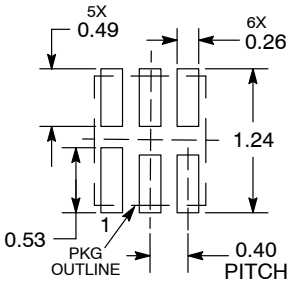

DIMENSIONS: MILLIMETERS

*For additional information on our Pb−Free strategy and soldering details, please download the ON Semiconductor Soldering and Mounting Techniques Reference Manual, SOLDERRM/D.

PACKAGE DIMENSIONS

ULLGA6 1.45x1.0, 0.5P
CASE 613AF−01
ISSUE A

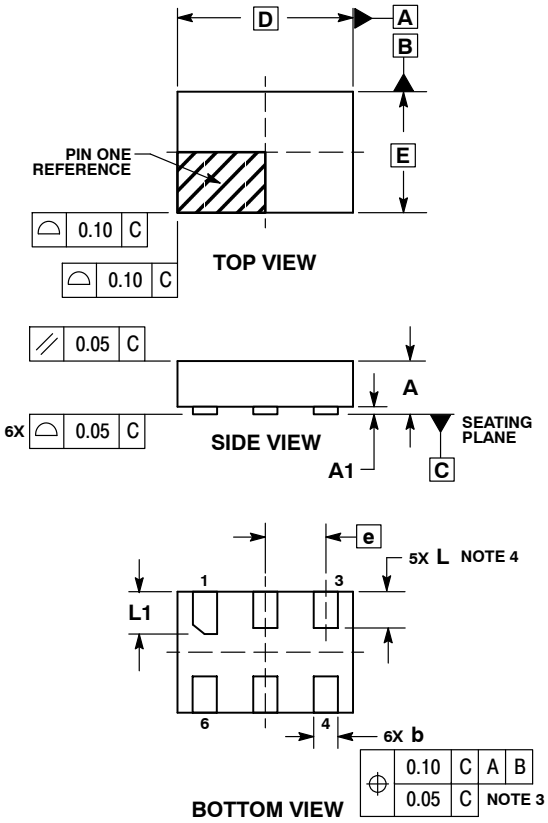

NOTES:
1. DIMENSIONING AND TOLERANCING PER ASME Y14.5M, 1994.
2. CONTROLLING DIMENSION: MILLIMETERS.
3. DIMENSION b APPLIES TO PLATED TERMINAL AND IS MEASURED BETWEEN 0.15 AND 0.30 mm FROM THE TERMINAL TIP.
4. A MAXIMUM OF 0.05 PULL BACK OF THE PLATED TERMINAL FROM THE EDGE OF THE PACKAGE IS ALLOWED.

	MILLIMETERS	
DIM	MIN	MAX
A	−−−	0.40
A1	0.00	0.05
b	0.15	0.25
D	1.45 BSC	
E	1.00 BSC	
e	0.50 BSC	
L	0.25	0.35
L1	0.30	0.40

MOUNTING FOOTPRINT SOLDERMASK DEFINED*

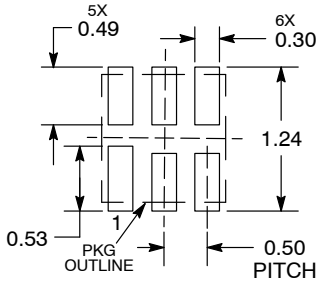

DIMENSIONS: MILLIMETERS

*For additional information on our Pb−Free strategy and soldering details, please download the ON Semiconductor Soldering and Mounting Techniques Reference Manual, SOLDERRM/D.

ON Semiconductor and ON are registered trademarks of Semiconductor Components Industries, LLC (SCILLC). SCILLC reserves the right to make changes without further notice to any products herein. SCILLC makes no warranty, representation or guarantee regarding the suitability of its products for any particular purpose, nor does SCILLC assume any liability arising out of the application or use of any product or circuit, and specifically disclaims any and all liability, including without limitation special, consequential or incidental damages. “Typical” parameters which may be provided in SCILLC data sheets and/or specifications can and do vary in different applications and actual performance may vary over time. All operating parameters, including “Typicals” must be validated for each customer application by customer’s technical experts. SCILLC does not convey any license under its patent rights nor the rights of others. SCILLC products are not designed, intended, or authorized for use as components in systems intended for surgical implant into the body, or other applications intended to support or sustain life, or for any other application in which the failure of the SCILLC product could create a situation where personal injury or death may occur. Should Buyer purchase or use SCILLC products for any such unintended or unauthorized application, Buyer shall indemnify and hold SCILLC and its officers, employees, subsidiaries, affiliates, and distributors harmless against all claims, costs, damages, and expenses, and reasonable attorney fees arising out of, directly or indirectly, any claim of personal injury or death associated with such unintended or unauthorized use, even if such claim alleges that SCILLC was negligent regarding the design or manufacture of the part. SCILLC is an Equal Opportunity/Affirmative Action Employer. This literature is subject to all applicable copyright laws and is not for resale in any manner.

PUBLICATION ORDERING INFORMATION

LITERATURE FULFILLMENT:
Literature Distribution Center for ON Semiconductor
P.O. Box 5163, Denver, Colorado 80217 USA
Phone: 303−675−2175 or 800−344−3860 Toll Free USA/Canada
Fax: 303−675−2176 or 800−344−3867 Toll Free USA/Canada
Email: orderlit@onsemi.com

N. American Technical Support: 800−282−9855 Toll Free USA/Canada
Europe, Middle East and Africa Technical Support:
Phone: 421 33 790 2910
Japan Customer Focus Center
Phone: 81−3−5773−3850

ON Semiconductor Website: **www.onsemi.com**

Order Literature: http://www.onsemi.com/orderlit

For additional information, please contact your local Sales Representative

Компания «ЭлектроПласт» предлагает заключение долгосрочных отношений при поставках импортных электронных компонентов на взаимовыгодных условиях!

Наши преимущества:

- Оперативные поставки широкого спектра электронных компонентов отечественного и импортного производства напрямую от производителей и с крупнейших мировых складов;
- Поставка более 17-ти миллионов наименований электронных компонентов;
- Поставка сложных, дефицитных, либо снятых с производства позиций;
- Оперативные сроки поставки под заказ (от 5 рабочих дней);
- Экспресс доставка в любую точку России;
- Техническая поддержка проекта, помощь в подборе аналогов, поставка прототипов;
- Система менеджмента качества сертифицирована по Международному стандарту ISO 9001;
- Лицензия ФСБ на осуществление работ с использованием сведений, составляющих государственную тайну;
- Поставка специализированных компонентов (Xilinx, Altera, Analog Devices, Intersil, Interpoint, Microsemi, Aeroflex, Peregrine, Syfer, Eurofarad, Texas Instrument, Miteq, Cobham, E2V, MA-COM, Hittite, Mini-Circuits,General Dynamics и др.);

Помимо этого, одним из направлений компании «ЭлектроПласт» является направление «Источники питания». Мы предлагаем Вам помощь Конструкторского отдела:

- Подбор оптимального решения, техническое обоснование при выборе компонента;
- Подбор аналогов;
- Консультации по применению компонента;
- Поставка образцов и прототипов;
- Техническая поддержка проекта;
- Защита от снятия компонента с производства.

Как с нами связаться

Телефон: 8 (812) 309 58 32 (многоканальный)
Факс: 8 (812) 320-02-42
Электронная почта: org@eplast1.ru
Адрес: 198099, г. Санкт-Петербург, ул. Калинина, дом 2, корпус 4, литера А.