Edgewound Power Resistor

FEATURES

- Resistance-alloy ribbon wire is coiled on edge and supported on specially designed porcelain insulators
- Open coil construction allows efficient heat dissipation and easily accommodates reasonable overloads and surges
- Insulators provide proper turn-to-turn spacing and insulation from support bars
- Terminals are welded to the resistive wire for a reliable electrical connection
- Wirewound
- Material categorization: for definitions of compliance please see www.vishay.com/doc?99912

Pb-free
RoHS COMPLIANT

STANDARD ELECTRICAL SPECIFICATIONS					
GLOBAL MODEL	HISTORICAL MODEL	RESISTANCE Ω	POWER RATING W	CURRENT A	TOLERANCE ± %
EDGF0400R0530KXB00	214618	0.053	400	85.0	10
EDGF0400R0600KXB00	214619	0.060	400	80.0	10
EDGF0400R0680KXB00	214620	0.068	400	75.0	10
EDGF0400R0760KXB00	214621	0.076	400	70.0	10
EDGF0400R0850KXB00	214622	0.085	400	67.0	10
EDGF0400R0970KXB00	214623	0.097	400	63.0	10
EDGF0400R1070KXB00	214624	0.107	400	60.0	10
EDGF0400R1220KXB00	214625	0.122	400	56.0	10
EDGF0400R1360KXB00	214626	0.136	400	53.0	10
EDGF0400R1520KXB00	214627	0.152	400	50.0	10
EDGF0400R1720KXB00	214628	0.172	400	47.0	10
EDGF0400R1910KXB00	214629	0.191	400	45.0	10
EDGF0400R2300KXB00	214630	0.230	400	41.5	10
EDGF0400R2420KXB00	214631	0.242	400	40.0	10
EDGF0400R2740KXB00	214632	0.274	400	37.4	10
EDGF0400R3120KXB00	214633	0.312	400	35.0	10
EDGF0400R3520KXB00	214634	0.352	400	33.0	10
EDGF0400R3950KXB00	214635	0.395	400	31.0	10
EDGF0400R4320KXB00	214636	0.432	400	29.6	10
EDGF0400R5000KXB00	214637	0.500	400	27.6	10
EDGF0400R5600KXB00	214638	0.560	400	26.0	10
EDGF0400R6280KXB00	214639	0.628	400	24.7	10
EDGF0400R6660KXB00	214640	0.666	400	23.9	10
EDGF0400R7500KXB00	214641	0.750	400	22.5	10
EDGF0400R7900KXB00	214642	0.790	400	22.0	10
EDGF0400R8860KXB00	214643	0.886	400	20.7	10
EDGF0400R9900KXB00	214644	0.990	400	19.6	10
EDGF04001R110KXB00	214645	1.110	400	18.5	10
EDGF04001R230KXB00	214646	1.230	400	17.2	10
EDGF0600R0840KXB00	214658	0.084	600	85.0	10
EDGF0600R0940KXB00	214659	0.094	600	80.0	10
EDGF0600R1060KXB00	214660	0.106	600	75.0	10
EDGF0600R1190KXB00	214661	0.119	600	70.0	10
EDGF0600R1340KXB00	214662	0.134	600	67.0	10
EDGF0600R1510KXB00	214663	0.151	600	63.0	10
EDGF0600R1680KXB00	214664	0.168	600	60.0	10
EDGF0600R1920KXB00	214665	0.192	600	56.0	10
EDGF0600R2150KXB00	214666	0.215	600	53.0	10

For technical questions, contact: vishaymilwaukeeresistor@vishay.com
THIS DOCUMENT IS SUBJECT TO CHANGE WITHOUT NOTICE. THE PRODUCTS DESCRIBED HEREIN AND THIS DOCUMENT ARE SUBJECT TO SPECIFIC DISCLAIMERS, SET FORTH AT www.vishay.com/doc?91000

STANDARD ELECTRICAL SPECIFICATIONS

GLOBAL MODEL	HISTORICAL MODEL	RESISTANCE Ω	POWER RATING W	CURRENT A	TOLERANCE ± %
EDGF0600R2400KXB00	214667	0.240	600	50.0	10
EDGF0600R2700KXB00	214668	0.270	600	47.0	10
EDGF0600R3000KXB00	214669	0.300	600	45.0	10
EDGF0600R3480KXB00	214670	0.348	600	41.5	10
EDGF0600R3800KXB00	214671	0.380	600	40.0	10
EDGF0600R4300KXB00	214672	0.430	600	37.4	10
EDGF0600R4900KXB00	214673	0.490	600	35.0	10
EDGF0600R5500KXB00	214674	0.550	600	33.0	10
EDGF0600R6200KXB00	214675	0.620	600	31.0	10
EDGF0600R6850KXB00	214676	0.685	600	29.6	10
EDGF0600R7850KXB00	214677	0.785	600	27.6	10
EDGF0600R8750KXB00	214678	0.875	600	26.0	10
EDGF0600R9800KXB00	214679	0.980	600	24.7	10
EDGF06001R050KXB00	214680	1.050	600	23.9	10
EDGF06001R180KXB00	214681	1.180	600	22.5	10
EDGF06001R240KXB00	214682	1.240	600	22.0	10
EDGF06001R390KXB00	214683	1.390	600	20.7	10
EDGF06001R560KXB00	214684	1.560	600	19.6	10
EDGF06001R740KXB00	214685	1.740	600	18.5	10
EDGF06001R930KXB00	214686	1.930	600	17.2	10
EDGF0800R1150KXB00	214698	0.115	800	85.0	10
EDGF0800R1290KXB00	214699	0.129	800	80.0	10
EDGF0800R1450KXB00	214700	0.145	800	75.0	10
EDGF0800R1620KXB00	214701	0.162	800	70.0	10
EDGF0800R1830KXB00	214702	0.183	800	67.0	10
EDGF0800R2050KXB00	214703	0.205	800	63.0	10
EDGF0800R2300KXB00	214704	0.230	800	60.0	10
EDGF0800R2610KXB00	214705	0.261	800	56.0	10
EDGF0800R2950KXB00	214706	0.295	800	53.0	10
EDGF0800R3280KXB00	214707	0.328	800	50.0	10
EDGF0800R3690KXB00	214708	0.369	800	47.0	10
EDGF0800R4100KXB00	214709	0.410	800	45.0	10
EDGF0800R4650KXB00	214710	0.465	800	41.5	10
EDGF0800R5200KXB00	214711	0.520	800	40.0	10
EDGF0800R5850KXB00	214712	0.585	800	37.4	10
EDGF0800R6750KXB00	214713	0.675	800	35.0	10
EDGF0800R7500KXB00	214714	0.750	800	33.0	10
EDGF0800R8450KXB00	214715	0.845	800	31.0	10
EDGF0800R9450KXB00	214716	0.945	800	29.6	10
EDGF08001R070KXB00	214717	1.070	800	27.6	10
EDGF08001R190KXB00	214718	1.190	800	26.0	10
EDGF08001R340KXB00	214719	1.340	800	24.7	10
EDGF08001R420KXB00	214720	1.420	800	23.9	10
EDGF08001R610KXB00	214721	1.610	800	22.5	10
EDGF08001R690KXB00	214722	1.690	800	22.0	10
EDGF08001R900KXB00	214723	1.900	800	20.7	10
EDGF08002R130KXB00	214724	2.130	800	19.6	10
EDGF08002R370KXB00	214725	2.370	800	18.5	10
EDGF08002R640KXB00	214726	2.640	800	17.2	10
EDGF1000R1460KXB00	214738	0.146	1000	85.0	10
EDGF1000R1630KXB00	214739	0.163	1000	80.0	10
EDGF1000R1830KXB00	214740	0.183	1000	75.0	10
EDGF1000R2060KXB00	214741	0.206	1000	70.0	10
EDGF1000R2320KXB00	214742	0.232	1000	67.0	10
EDGF1000R2620KXB00	214743	0.262	1000	63.0	10
EDGF1000R2920KXB00	214744	0.292	1000	60.0	10
EDGF1000R3320KXB00	214745	0.332	1000	56.0	10
EDGF1000R3740KXB00	214746	0.374	1000	53.0	10

For technical questions, contact: vishaymilwaukeeresistor@vishay.com
THIS DOCUMENT IS SUBJECT TO CHANGE WITHOUT NOTICE. THE PRODUCTS DESCRIBED HEREIN AND THIS DOCUMENT ARE SUBJECT TO SPECIFIC DISCLAIMERS, SET FORTH AT www.vishay.com/doc?91000

STANDARD ELECTRICAL SPECIFICATIONS

GLOBAL MODEL	HISTORICAL MODEL	RESISTANCE Ω	POWER RATING W	CURRENT A	TOLERANCE ± %
EDGF1000R4150KXB00	214747	0.415	1000	50.0	10
EDGF1000R4660KXB00	214748	0.466	1000	47.0	10
EDGF1000R5200KXB00	214749	0.520	1000	45.0	10
EDGF1000R5900KXB00	214750	0.590	1000	41.5	10
EDGF1000R6600KXB00	214751	0.660	1000	40.0	10
EDGF1000R7400KXB00	214752	0.740	1000	37.4	10
EDGF1000R8500KXB00	214753	0.850	1000	35.0	10
EDGF1000R9500KXB00	214754	0.950	1000	33.0	10
EDGF10001R070KXB00	214755	1.070	1000	31.0	10
EDGF10001R200KXB00	214756	1.200	1000	29.6	10
EDGF10001R360KXB00	214757	1.360	1000	27.6	10
EDGF10001R510KXB00	214758	1.510	1000	26.0	10
EDGF10001R690KXB00	214759	1.690	1000	24.7	10
EDGF10001R810KXB00	214760	1.810	1000	23.9	10
EDGF10002R030KXB00	214761	2.030	1000	22.5	10
EDGF10002R130KXB00	214762	2.130	1000	22.0	10
EDGF10002R400KXB00	214763	2.400	1000	20.7	10
EDGF10002R700KXB00	214764	2.700	1000	19.6	10
EDGF10003R000KXB00	214765	3.000	1000	18.5	10
EDGF10003R350KXB00	214766	3.350	1000	17.2	10
EDGF1200R1760KXB00	214778	0.176	1200	85.0	10
EDGF1200R1970KXB00	214779	0.197	1200	80.0	10
EDGF1200R2210KXB00	214780	0.221	1200	75.0	10
EDGF1200R2490KXB00	214781	0.249	1200	70.0	10
EDGF1200R2800KXB00	214782	0.280	1200	67.0	10
EDGF1200R3150KXB00	214783	0.315	1200	63.0	10
EDGF1200R3520KXB00	214784	0.352	1200	60.0	10
EDGF1200R4000KXB00	214785	0.400	1200	56.0	10
EDGF1200R4580KXB00	214786	0.458	1200	53.0	10
EDGF1200R5040KXB00	214787	0.504	1200	50.0	10
EDGF1200R5720KXB00	214788	0.572	1200	47.0	10
EDGF1200R6270KXB00	214789	0.627	1200	45.0	10
EDGF1200R7000KXB00	214790	0.700	1200	41.5	10
EDGF1200R7960KXB00	214791	0.796	1200	40.0	10
EDGF1200R8970KXB00	214792	0.897	1200	37.4	10
EDGF12001R050KXB00	214793	1.050	1200	35.0	10
EDGF12001R150KXB00	214794	1.150	1200	33.0	10
EDGF12001R290KXB00	214795	1.290	1200	31.0	10
EDGF12001R450KXB00	214796	1.450	1200	29.6	10
EDGF12001R640KXB00	214797	1.640	1200	27.6	10
EDGF12001R830KXB00	214798	1.830	1200	26.0	10
EDGF12002R050KXB00	214799	2.050	1200	24.7	10
EDGF12002R200KXB00	214800	2.200	1200	23.9	10
EDGF12002R460KXB00	214801	2.460	1200	22.5	10
EDGF12002R580KXB00	214802	2.580	1200	22.0	10
EDGF12002R910KXB00	214803	2.910	1200	20.7	10
EDGF12003R260KXB00	214804	3.260	1200	19.6	10
EDGF12003R620KXB00	214805	3.620	1200	18.5	10
EDGF12004R040KXB00	214806	4.040	1200	17.2	10
EDGF1400R2000KXB00	214818	0.200	1400	85.0	10
EDGF1400R2240KXB00	214819	0.224	1400	80.0	10
EDGF1400R2510KXB00	214820	0.251	1400	75.0	10
EDGF1400R2820KXB00	214821	0.282	1400	70.0	10
EDGF1400R3180KXB00	214822	0.318	1400	67.0	10
EDGF1400R3690KXB00	214823	0.369	1400	63.0	10
EDGF1400R4130KXB00	214824	0.413	1400	60.0	10
EDGF1400R4700KXB00	214825	0.470	1400	56.0	10
EDGF1400R5300KXB00	214826	0.530	1400	53.0	10

For technical questions, contact: vishaymilwaukeeresistor@vishay.com
THIS DOCUMENT IS SUBJECT TO CHANGE WITHOUT NOTICE. THE PRODUCTS DESCRIBED HEREIN AND THIS DOCUMENT ARE SUBJECT TO SPECIFIC DISCLAIMERS, SET FORTH AT www.vishay.com/doc?91000

STANDARD ELECTRICAL SPECIFICATIONS

GLOBAL MODEL	HISTORICAL MODEL	RESISTANCE Ω	POWER RATING W	CURRENT A	TOLERANCE ± %
EDGF1400R5900KXB00	214827	0.590	1400	50.0	10
EDGF1400R6630KXB00	214828	0.663	1400	47.0	10
EDGF1400R7350KXB00	214829	0.735	1400	45.0	10
EDGF1400R8300KXB00	214830	0.830	1400	41.5	10
EDGF1400R9300KXB00	214831	0.930	1400	40.0	10
EDGF14001R050KXB00	214832	1.050	1400	37.4	10
EDGF14001R200KXB00	214833	1.200	1400	35.0	10
EDGF14001R340KXB00	214834	1.340	1400	33.0	10
EDGF14001R520KXB00	214835	1.520	1400	31.0	10
EDGF14001R700KXB00	214836	1.700	1400	29.6	10
EDGF14001R920KXB00	214837	1.920	1400	27.6	10
EDGF14002R140KXB00	214838	2.140	1400	26.0	10
EDGF14002R400KXB00	214839	2.400	1400	24.7	10
EDGF14002R570KXB00	214840	2.570	1400	23.9	10
EDGF14002R900KXB00	214841	2.900	1400	22.5	10
EDGF14003R040KXB00	214842	3.040	1400	22.0	10
EDGF14003R400KXB00	214843	3.400	1400	20.7	10
EDGF14003R830KXB00	214844	3.830	1400	19.6	10
EDGF14004R250KXB00	214845	4.250	1400	18.5	10
EDGF14004R730KXB00	214846	4.730	1400	17.2	10
EDGF1600R2370KXB00	214858	0.237	1600	85.0	10
EDGF1600R2650KXB00	214859	0.265	1600	80.0	10
EDGF1600R2980KXB00	214860	0.298	1600	75.0	10
EDGF1600R3350KXB00	214861	0.335	1600	70.0	10
EDGF1600R3770KXB00	214862	0.377	1600	67.0	10
EDGF1600R4220KXB00	214863	0.422	1600	63.0	10
EDGF1600R4740KXB00	214864	0.474	1600	60.0	10
EDGF1600R5400KXB00	214865	0.540	1600	56.0	10
EDGF1600R6080KXB00	214866	0.608	1600	53.0	10
EDGF1600R6780KXB00	214867	0.678	1600	50.0	10
EDGF1600R7600KXB00	214868	0.760	1600	47.0	10
EDGF1600R8450KXB00	214869	0.845	1600	45.0	10
EDGF1600R9400KXB00	214870	0.940	1600	41.5	10
EDGF16001R070KXB00	214871	1.070	1600	40.0	10
EDGF16001R210KXB00	214872	1.210	1600	37.4	10
EDGF16001R380KXB00	214873	1.380	1600	35.0	10
EDGF16001R540KXB00	214874	1.540	1600	33.0	10
EDGF16001R750KXB00	214875	1.750	1600	31.0	10
EDGF16001R950KXB00	214876	1.950	1600	29.6	10
EDGF16002R200KXB00	214877	2.200	1600	27.6	10
EDGF16002R450KXB00	214878	2.450	1600	26.0	10
EDGF16002R750KXB00	214879	2.750	1600	24.7	10
EDGF16002R970KXB00	214880	2.970	1600	23.9	10
EDGF16003R320KXB00	214881	3.320	1600	22.5	10
EDGF16003R480KXB00	214882	3.480	1600	22.0	10
EDGF16003R910KXB00	214883	3.910	1600	20.7	10
EDGF16004R400KXB00	214884	4.400	1600	19.6	10
EDGF16004R900KXB00	214885	4.900	1600	18.5	10
EDGF16005R440KXB00	214886	5.440	1600	17.2	10

MATERIAL SPECIFICATIONS

Element	Stainless steel, copper-nickel, nickel-chrome
Core	Electrical porcelain
Coating	None
Standard terminals	Stainless steel
Part marking	Part number, value, date code, MRC

For technical questions, contact: vishaymilwaukeeresistor@vishay.com
THIS DOCUMENT IS SUBJECT TO CHANGE WITHOUT NOTICE. THE PRODUCTS DESCRIBED HEREIN AND THIS DOCUMENT ARE SUBJECT TO SPECIFIC DISCLAIMERS, SET FORTH AT www.vishay.com/doc?91000

DIMENSIONS in inches (millimeters)

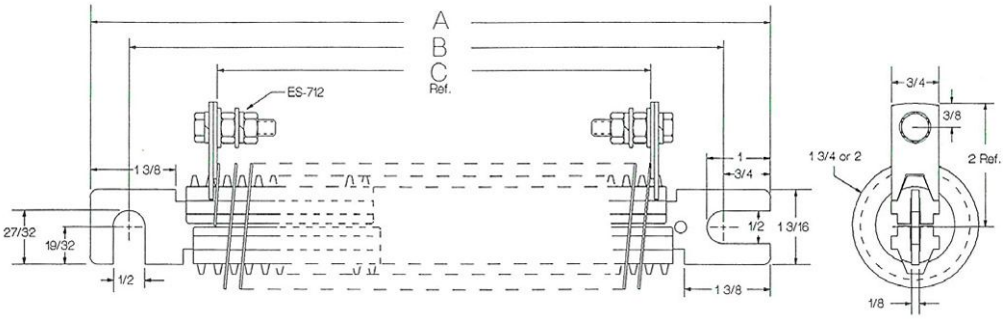

WATTAGE	A	B	C	WEIGHT g
400	8.875 (225.425)	7.25 (184.15)	5.125 (130.175)	525
600	12.25 (311.15)	11 (279.4)	8.125 (206.375)	600
800	15.25 (387.35)	14 (355.6)	11 (279.4)	800
1000	18.25 (463.55)	17 (431.8)	14 (355.6)	900
1200	21.25 (539.75)	20 (508)	17 (431.8)	1100
1400	24.25 (615.95)	23 (584.2)	20 (508)	1300
1600	27.25 (692.15)	26 (660.4)	23 (584.2)	1500

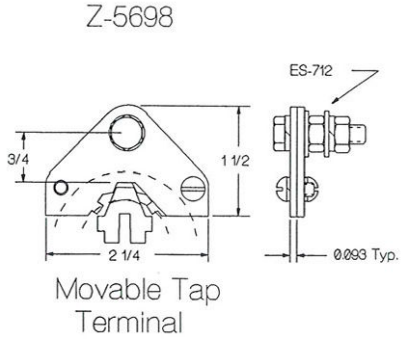

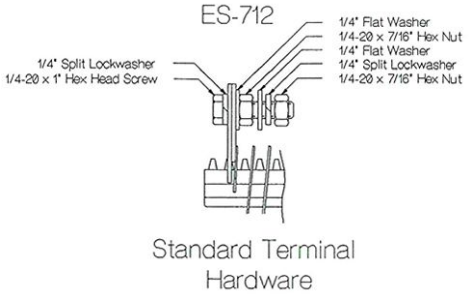

METRIC OPTIONS AVAILABLE

Metric Hardware on Terminal Lugs

Use terminal designation "1" example: EDGF10001R000K**1**B00

Note

- If "1" is selected for the terminal option, the resistor thru bolt will also be metric.

GLOBAL PART NUMBER INFORMATION

Global Part Numbering example: EDGA1200R4580KXB00 (EDG1200 .458 10 % 3/4LSteel712 B)

E	D	G	A	1	2	0	0	R	4	5	8	0	K	X	B	0	0

MODEL (3 digits)	TYPE (1 digit)	SIZE (4 digits)	VALUE (5 digits)	TOLERANCE (1 digit)	TERMINAL (1 digit)	PACKAGING (1 digit)	SPECIAL (2 digits)
EDG	**A** = Adjustable **F** = Fixed	**0400** = 400 W **1600** = 1600 W Available sizes: 0400 0600 0800 1000 1200 1400 1600	**R** = Decimal **R1500** = 0.15 Ω Check datasheet for available value range	**K** = ± 10 %	**X** = 3/4" lug with steel hardware (3/4LSteel712)	**B** = Bulk	**00** = Standard **CC** = Competitor cross (1000 W only)

For technical questions, contact: vishaymilwaukeeresistor@vishay.com
THIS DOCUMENT IS SUBJECT TO CHANGE WITHOUT NOTICE. THE PRODUCTS DESCRIBED HEREIN AND THIS DOCUMENT ARE SUBJECT TO SPECIFIC DISCLAIMERS, SET FORTH AT www.vishay.com/doc?91000

Disclaimer

ALL PRODUCT, PRODUCT SPECIFICATIONS AND DATA ARE SUBJECT TO CHANGE WITHOUT NOTICE TO IMPROVE RELIABILITY, FUNCTION OR DESIGN OR OTHERWISE.

Vishay Intertechnology, Inc., its affiliates, agents, and employees, and all persons acting on its or their behalf (collectively, "Vishay"), disclaim any and all liability for any errors, inaccuracies or incompleteness contained in any datasheet or in any other disclosure relating to any product.

Vishay makes no warranty, representation or guarantee regarding the suitability of the products for any particular purpose or the continuing production of any product. To the maximum extent permitted by applicable law, Vishay disclaims (i) any and all liability arising out of the application or use of any product, (ii) any and all liability, including without limitation special, consequential or incidental damages, and (iii) any and all implied warranties, including warranties of fitness for particular purpose, non-infringement and merchantability.

Statements regarding the suitability of products for certain types of applications are based on Vishay's knowledge of typical requirements that are often placed on Vishay products in generic applications. Such statements are not binding statements about the suitability of products for a particular application. It is the customer's responsibility to validate that a particular product with the properties described in the product specification is suitable for use in a particular application. Parameters provided in datasheets and / or specifications may vary in different applications and performance may vary over time. All operating parameters, including typical parameters, must be validated for each customer application by the customer's technical experts. Product specifications do not expand or otherwise modify Vishay's terms and conditions of purchase, including but not limited to the warranty expressed therein.

Except as expressly indicated in writing, Vishay products are not designed for use in medical, life-saving, or life-sustaining applications or for any other application in which the failure of the Vishay product could result in personal injury or death. Customers using or selling Vishay products not expressly indicated for use in such applications do so at their own risk. Please contact authorized Vishay personnel to obtain written terms and conditions regarding products designed for such applications.

No license, express or implied, by estoppel or otherwise, to any intellectual property rights is granted by this document or by any conduct of Vishay. Product names and markings noted herein may be trademarks of their respective owners.

© 2019 VISHAY INTERTECHNOLOGY, INC. ALL RIGHTS RESERVED

Компания «ЭлектроПласт» предлагает заключение долгосрочных отношений при поставках импортных электронных компонентов на взаимовыгодных условиях!

Наши преимущества:

- Оперативные поставки широкого спектра электронных компонентов отечественного и импортного производства напрямую от производителей и с крупнейших мировых складов;
- Поставка более 17-ти миллионов наименований электронных компонентов;
- Поставка сложных, дефицитных, либо снятых с производства позиций;
- Оперативные сроки поставки под заказ (от 5 рабочих дней);
- Экспресс доставка в любую точку России;
- Техническая поддержка проекта, помощь в подборе аналогов, поставка прототипов;
- Система менеджмента качества сертифицирована по Международному стандарту ISO 9001;
- Лицензия ФСБ на осуществление работ с использованием сведений, составляющих государственную тайну;
- Поставка специализированных компонентов (Xilinx, Altera, Analog Devices, Intersil, Interpoint, Microsemi, Aeroflex, Peregrine, Syfer, Eurofarad, Texas Instrument, Miteq, Cobham, E2V, MA-COM, Hittite, Mini-Circuits,General Dynamics и др.);

Помимо этого, одним из направлений компании «ЭлектроПласт» является направление «Источники питания». Мы предлагаем Вам помощь Конструкторского отдела:

- Подбор оптимального решения, техническое обоснование при выборе компонента;
- Подбор аналогов;
- Консультации по применению компонента;
- Поставка образцов и прототипов;
- Техническая поддержка проекта;
- Защита от снятия компонента с производства.

Как с нами связаться

Телефон: 8 (812) 309 58 32 (многоканальный)
Факс: 8 (812) 320-02-42
Электронная почта: org@eplast1.ru
Адрес: 198099, г. Санкт-Петербург, ул. Калинина, дом 2, корпус 4, литера А.