High Luminous Efficacy
RGBW pin aligned LED Emitter

LZ4-00MD06

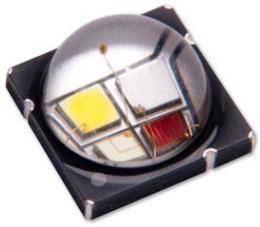

Key Features

- High Luminous Efficacy 4-die RGBW LED
- Individually addressable Red, Green, Blue and Daylight White die
- Anodes and Cathodes are aligned for easy connection of multiple emitters
- Electrically neutral thermal path
- Ultra-small foot print – 7.0mm x 7.0mm
- Surface mount ceramic package with integrated dome lens
- Very low Thermal Resistance (1.1°C/W)
- Very high Luminous Flux density
- New industry standard for Lumen Maintenance (>90% at 65,000 Hours)
- JEDEC Level 1 for Moisture Sensitivity Level
- Autoclave compliant (JEDEC JESD22-A102-C)
- Lead (Pb) free and RoHS compliant
- Reflow solderable (up to 6 cycles)
- Emitter available on Standard MCPCB (optional)

Typical Applications

- Architectural Lighting
- Retail Spot and Display Lighting
- Stage and Studio Lighting
- Hospitality Lighting
- Museum Lighting
- Video Walls and Full Color Displays

Description

The LZ4-00MD06 RGBW LED emitter contains one red, green, blue and daylight white LED die which provides 10W power in an extremely small package. With a 7.0mm x 7.0mm ultra-small footprint, this package allows close proximity to the LED die for optical systems designs that require imaging optics. LED Engin's RGBW LED offers ultimate design flexibility with individually addressable die. The LZ4-00MD06 is capable of producing a continuous spectrum of white light plus millions of colors. The patented design has unparalleled thermal and optical performance. The high quality materials used in the package are chosen to optimize light output and minimize stresses which results in monumental reliability and lumen maintenance. The robust product design thrives in outdoor applications with high ambient temperatures and high humidity.

COPYRIGHT © 2013 LED ENGIN. ALL RIGHTS RESERVED.

LED Engin | 651 River Oaks Parkway | San Jose, CA 95134 USA | **ph** +1 408 922 7200 | **fax** +1 408 922 0158 | **em** sales@ledengin.com | www.ledengin.com

Part number options

Base part number

Part number	Description
LZ4-00MD06-xxxx	LZ4 RGBW emitter pin aligned

Bin kit option codes

MD, Red-Green-Blue-White (5000K – 6500K)			
Kit number suffix	**Min flux Bin**	**Color Bin Ranges**	**Description**
0000	01R	R2 – R2	Red, full distribution flux; full distribution wavelength
	01G	G2 – G3	Green, full distribution flux; full distribution wavelength
	01B	B01 – B02	Blue, full distribution flux; full distribution wavelength
	01W	0bd, 0uy, 1bd, 1uy, 2vx, 2bd	White full distribution flux and CCT

COPYRIGHT © 2013 LED ENGIN. ALL RIGHTS RESERVED.

LED Engin | 651 River Oaks Parkway | San Jose, CA 95134 USA | **ph** +1 408 922 7200 | **fax** +1 408 922 0158 | **em** sales@ledengin.com | www.ledengin.com

Daylight White Chromaticity Groups

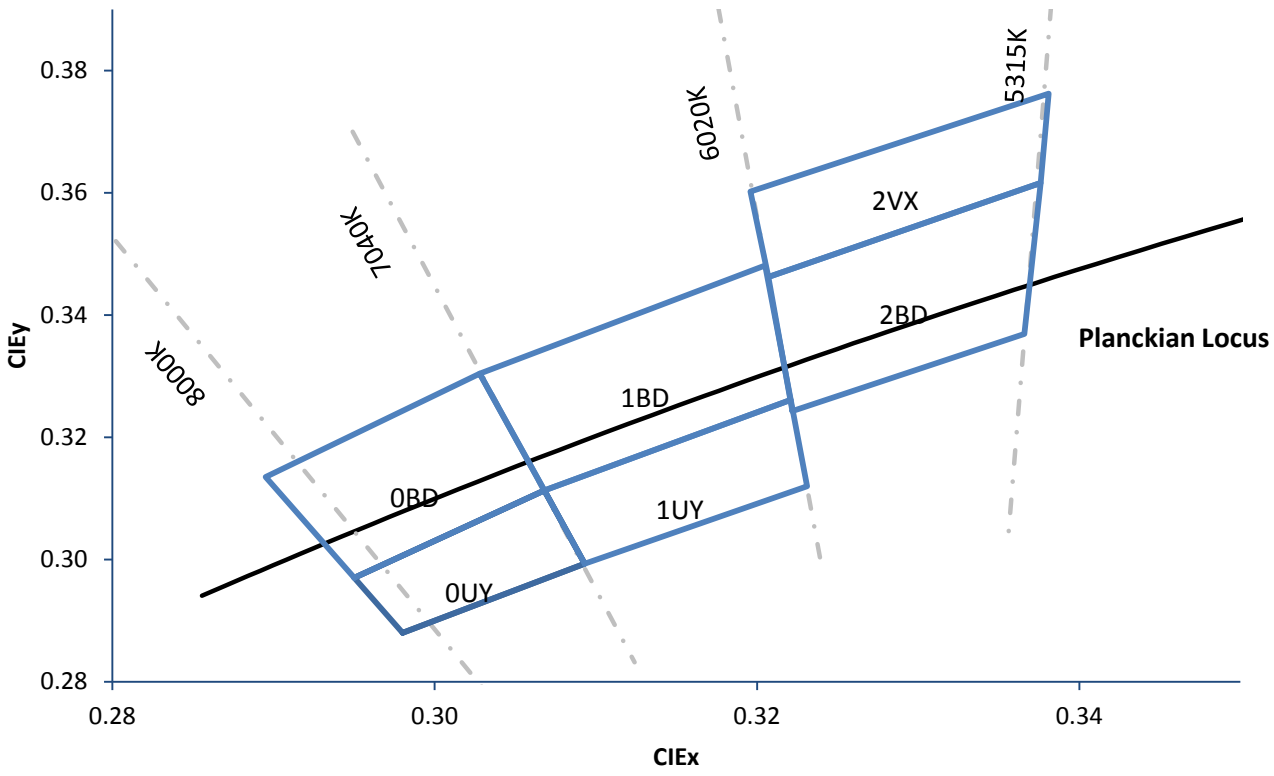

Standard Chromaticity Groups plotted on excerpt from the CIE 1931 (2°) x-y Chromaticity Diagram. Coordinates are listed below in Table 5.

Cool White Bin Coordinates

Bin Code	CIEx	CIEy	Bin Code	CIEx	CIEy	Bin Code	CIEx	CIEy
0BD	0.295	0.297	1BD	0.3068	0.3113	2VX	0.3207	0.3462
	0.2895	0.3135		0.3028	0.3304		0.3196	0.3602
	0.3028	0.3304		0.3205	0.3481		0.3381	0.3762
	0.3068	0.3113		0.3221	0.3261		0.3376	0.3616
	0.295	0.297		0.3068	0.3113		0.3207	0.3462
0UY	0.298	0.288	1UY	0.3093	0.2993	2BD	0.3222	0.3243
	0.295	0.297		0.3068	0.3113		0.3207	0.3462
	0.3068	0.3113		0.3221	0.3261		0.3376	0.3616
	0.3093	0.2993		0.3231	0.312		0.3366	0.3369
	0.298	0.288		0.3093	0.2993		0.3222	0.3243

COPYRIGHT © 2013 LED ENGIN. ALL RIGHTS RESERVED.

LED Engin | 651 River Oaks Parkway | San Jose, CA 95134 USA | **ph** +1 408 922 7200 | **fax** +1 408 922 0158 | **em** sales@ledengin.com | www.ledengin.com

Luminous Flux Bins

Table 1:

Bin Code	Minimum Luminous Flux (Φ_V) @ I_F = 700mA[1,2] (lm)				Maximum Luminous Flux (Φ_V) @ I_F = 700mA[1,2] (lm)			
	1 Red	1 Green	1 Blue	1 White	1 Red	1 Green	1 Blue	1 White
01R	65				105			
01G		125				170		
01B			17				27	
02B			27				43	
01W				155				225

Notes for Table 1:
1. Luminous flux performance guaranteed within published operating conditions. LED Engin maintains a tolerance of ±10% on flux measurements.
2. Future products will have even higher levels of radiant flux performance. Contact LED Engin Sales for updated information.

Dominant Wavelength Bins

Table 2:

Bin Code	Minimum Dominant Wavelength (λ_D) @ I_F = 700mA[1] (nm)			Maximum Dominant Wavelength (λ_D) @ I_F = 700mA[1] (nm)		
	1 Red	1 Green	1 Blue	1 Red	1 Green	1 Blue
R2	618			630		
G2		520			525	
G3		525			530	
B01			452			457
B02			457			462

Notes for Table 2:
1. LED Engin maintains a tolerance of ± 1.0nm on dominant wavelength measurements.

Forward Voltage Bin

Table 3:

Bin Code	Minimum Forward Voltage (V_F) @ I_F = 700mA[1] (V)				Maximum Forward Voltage (V_F) @ I_F = 700mA[1] (V)			
	1 Red	1 Green	1 Blue	1 White	1 Red	1 Green	1 Blue	1 White
0	2.10	3.20	3.20	3.20	3.20	4.20	4.00	4.00

Notes for Table 3:
1. LED Engin maintains a tolerance of ± 0.04V on forward voltage measurements.

COPYRIGHT © 2013 LED ENGIN. ALL RIGHTS RESERVED.

Absolute Maximum Ratings

Table 4:

Parameter	Symbol	Value	Unit
DC Forward Current Ti = 150C	I_F	1000	mA
DC Forward Current [1] Ti = 130C	I_F	1200	mA
Peak Pulsed Forward Current [2]	I_{FP}	1500	mA
Reverse Voltage	V_R	See Note 3	V
Storage Temperature	T_{std}	-40 ~ +150	°C
Junction Temperature	T_J	150	°C
Soldering Temperature [4]	T_{sol}	260	°C
Allowable Reflow Cycles		6	
Autoclave Conditions [5]		121°C at 2 ATM, 100% RH for 168 hours	
ESD Sensitivity [6]		> 8,000 V HBM Class 3B JESD22-A114-D	

Notes for Table 4:
1. Maximum DC forward current is determined by the overall thermal resistance and ambient temperature. Follow the curves in Figure 12 for current derating. Max current for continues operation is 1.0A
2: Pulse forward current conditions: Pulse Width ≤ 10msec and Duty Cycle ≤ 10%.
3. LEDs are not designed to be reversing biased.
4. Solder conditions per JEDEC 020D. See Reflow Soldering Profile Figure 4.
5. Autoclave Conditions per JEDEC JESD22-A102-C.
6. LED Engin recommends taking reasonable precautions towards possible ESD damages and handling the emitter in an electrostatic protected area (EPA). An EPA may be adequately protected by ESD controls as outlined in ANSI/ESD S6.1.

Optical Characteristics @T_C = 25°C

Table 5:

Parameter	Symbol	Typical				Unit
		Red	Green	Blue [1]	White	
Luminous Flux (@ I_F = 700mA)	Φ_V	85	140	30	170	lm
Luminous Flux (@ I_F = 1000mA)	Φ_V	110	180	40	222	lm
Dominant Wavelength		623	523	460		
Correlated Color Temperature	CCT				5500	K
Color Rendering Index (CRI)	R_a				75	
Viewing Angle [2]	$2\Theta_{½}$		95			
Total Included Angle [3]	$\Theta_{0.9}$		115			Degrees

Notes for Table 5:
1. When operating the Blue LED, observe IEC 60825-1 class 2 rating. Do not stare into the beam.
2. Viewing Angle is the off axis angle from emitter centerline where the luminous intensity is ½ of the peak value.
3. Total Included Angle is the total angle that includes 90% of the total luminous flux.

Electrical Characteristics @T_C = 25°C

Table 6:

Parameter	Symbol	Typical				Unit
		Red	Green	Blue	White	
Forward Voltage (@ I_F = 700mA)	V_F	2.2	3.35	3.2	3.2	V
Temperature Coefficient of Forward Voltage	$\Delta V_F/\Delta T_J$	-1.9	-2.9	-3.0	-3.0	mV/°C
Thermal Resistance (Junction to Case)	$R\Theta_{J-C}$		1.1			°C/W

COPYRIGHT © 2013 LED ENGIN. ALL RIGHTS RESERVED.

IPC/JEDEC Moisture Sensitivity Level

Table 7 - IPC/JEDEC J-STD-20D.1 MSL Classification:

			Soak Requirements			
	Floor Life		Standard		Accelerated	
Level	Time	Conditions	Time (hrs)	Conditions	Time (hrs)	Conditions
1	Unlimited	≤ 30°C/ 85% RH	168 +5/-0	85°C/ 85% RH	n/a	n/a

Notes for Table 7:

1. The standard soak time includes a default value of 24 hours for semiconductor manufacturer's exposure time (MET) between bake and bag and includes the maximum time allowed out of the bag at the distributor's facility.

Average Lumen Maintenance Projections

Lumen maintenance generally describes the ability of a lamp to retain its output over time. The useful lifetime for solid state lighting devices (Power LEDs) is also defined as Lumen Maintenance, with the percentage of the original light output remaining at a defined time period.

Based on long-term WHTOL testing, LED Engin projects that the LZ Series will deliver, on average, 70% Lumen Maintenance at 65,000 hours of operation at a forward current of 700 mA. This projection is based on constant current operation with junction temperature maintained at or below 125°C.

COPYRIGHT © 2013 LED ENGIN. ALL RIGHTS RESERVED.

Mechanical Dimensions (mm)

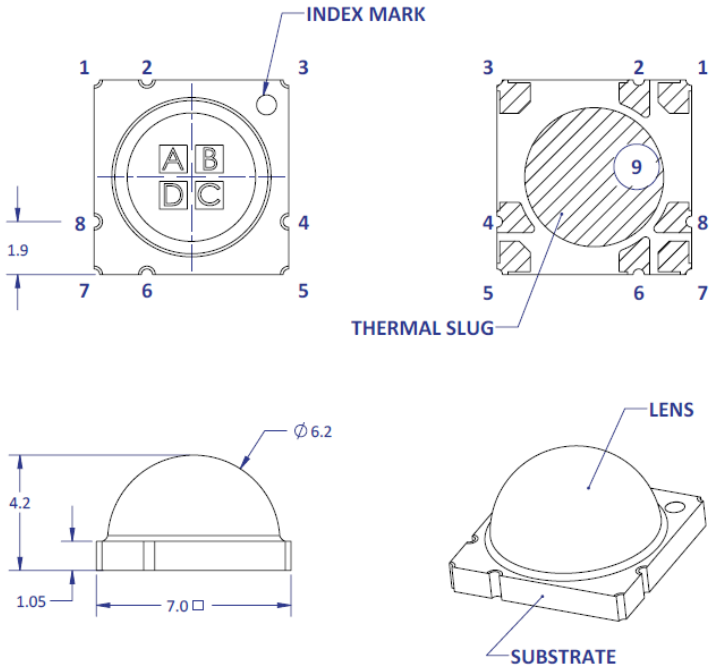

Pin Out			
Pad	**Die**	**Color**	**Function**
1	A	Red	Anode
2	D	Blue	Anode
3	B	Green	Anode
4	C	White	Anode
5	C	White	Cathode
6	B	Green	Cathode
7	D	Blue	Cathode
8	A	Red	Cathode
9 [2]	n/a	n/a	Thermal

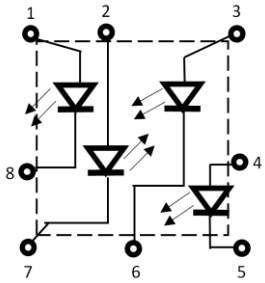

Figure 1: Package Outline Drawing.

Notes for Figure 1:
1. Unless otherwise noted, the tolerance = ± 0.20 mm.
2. Thermal contact, Pad 9, is electrically neutral.

Recommended Solder Pad Layout (mm)

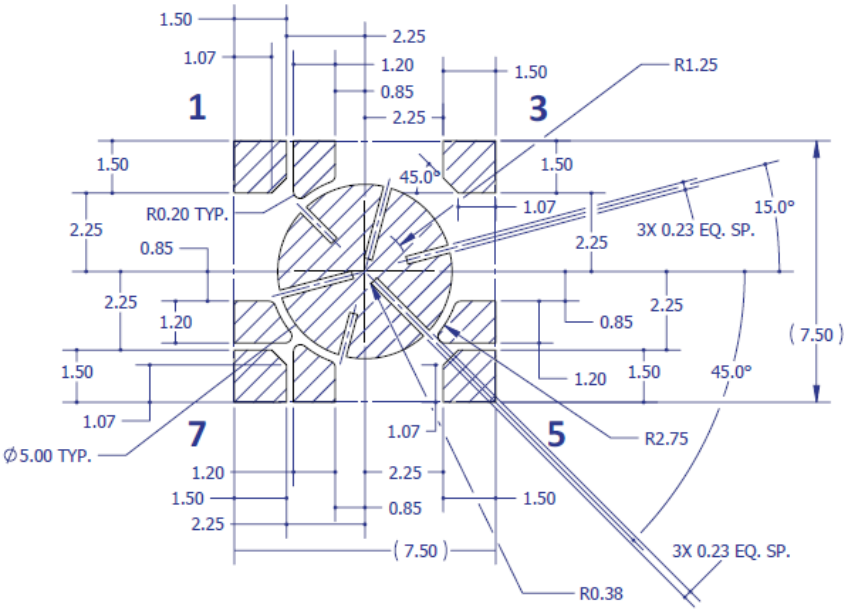

Figure 2a: Recommended solder pad layout for anode, cathode, and thermal pad.

Note for Figure 2a:
1. Unless otherwise noted, the tolerance = ± 0.20 mm.
2. This pad layout is “patent pending”.

COPYRIGHT © 2013 LED ENGIN. ALL RIGHTS RESERVED.

Recommended Solder Mask Layout (mm)

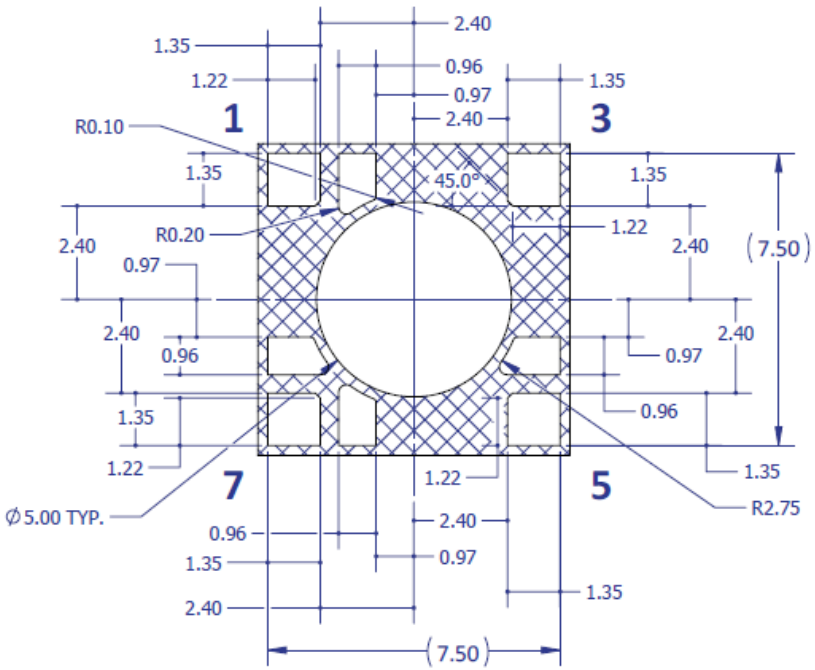

Figure 2b: Recommended solder mask opening (hatched area) for anode, cathode, and thermal pad.

Note for Figure 2b:
1. Unless otherwise noted, the tolerance = ± 0.20 mm.

Reflow Soldering Profile

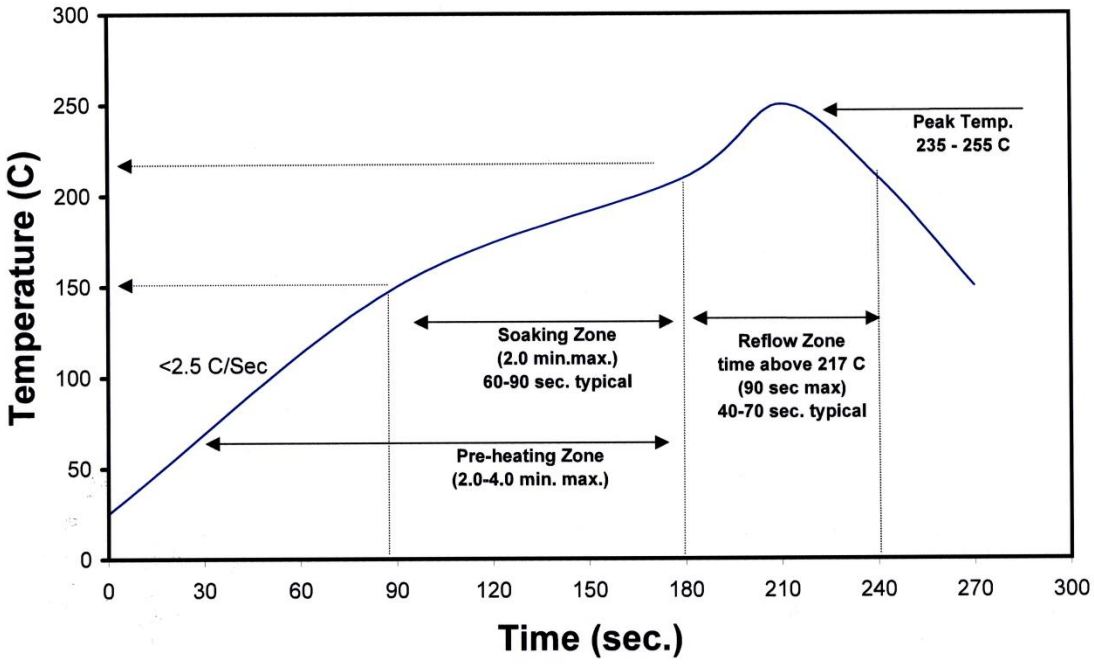

Figure 3: Reflow soldering profile for lead free soldering.

COPYRIGHT © 2013 LED ENGIN. ALL RIGHTS RESERVED.

LED Engin | 651 River Oaks Parkway | San Jose, CA 95134 USA | **ph** +1 408 922 7200 | **fax** +1 408 922 0158 | **em** sales@ledengin.com | www.ledengin.com

Typical Radiation Pattern

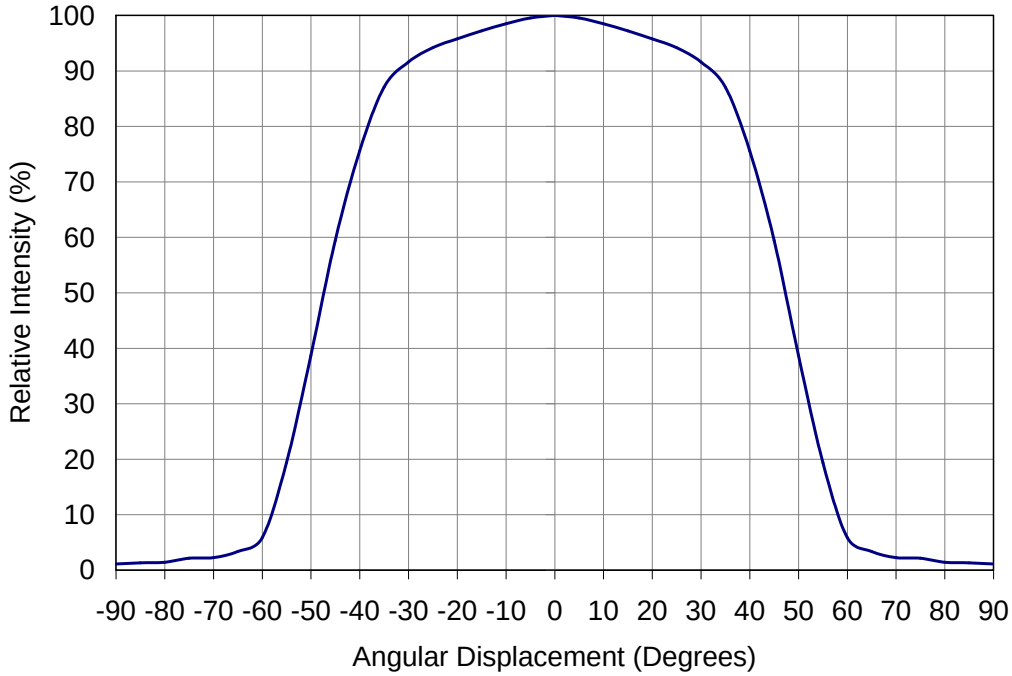

Figure 4: Typical representative spatial radiation pattern.

Typical Relative Spectral Power Distribution

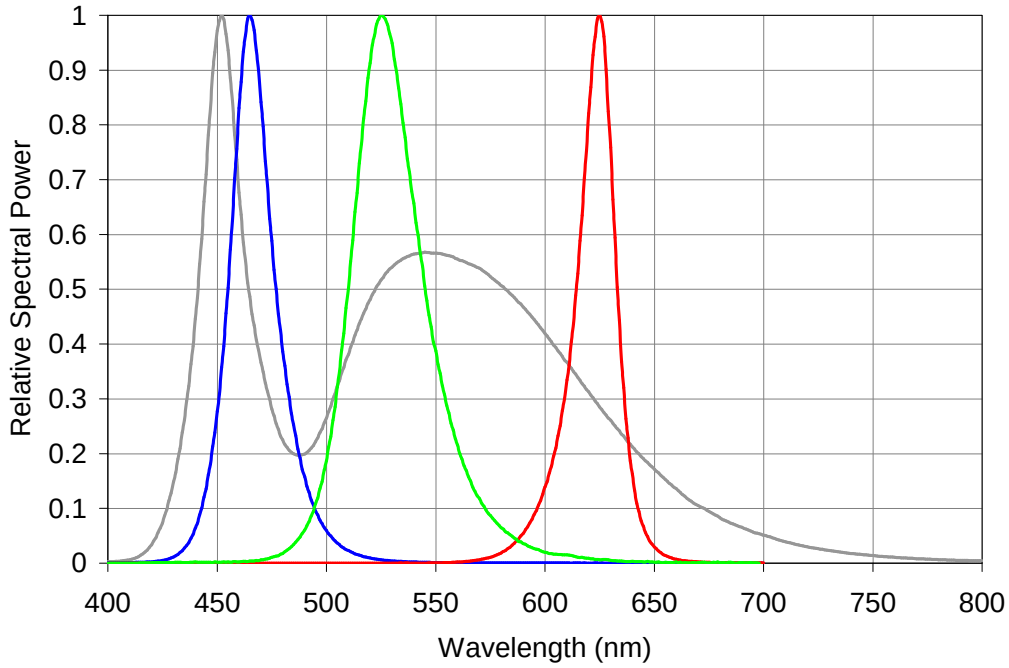

Figure 5: Typical relative spectral power vs. wavelength @ T_C = 25°C.

COPYRIGHT © 2013 LED ENGIN. ALL RIGHTS RESERVED.

LED Engin | 651 River Oaks Parkway | San Jose, CA 95134 USA | **ph** +1 408 922 7200 | **fax** +1 408 922 0158 | **em** sales@ledengin.com | www.ledengin.com

Typical Dominant Wavelength Shift

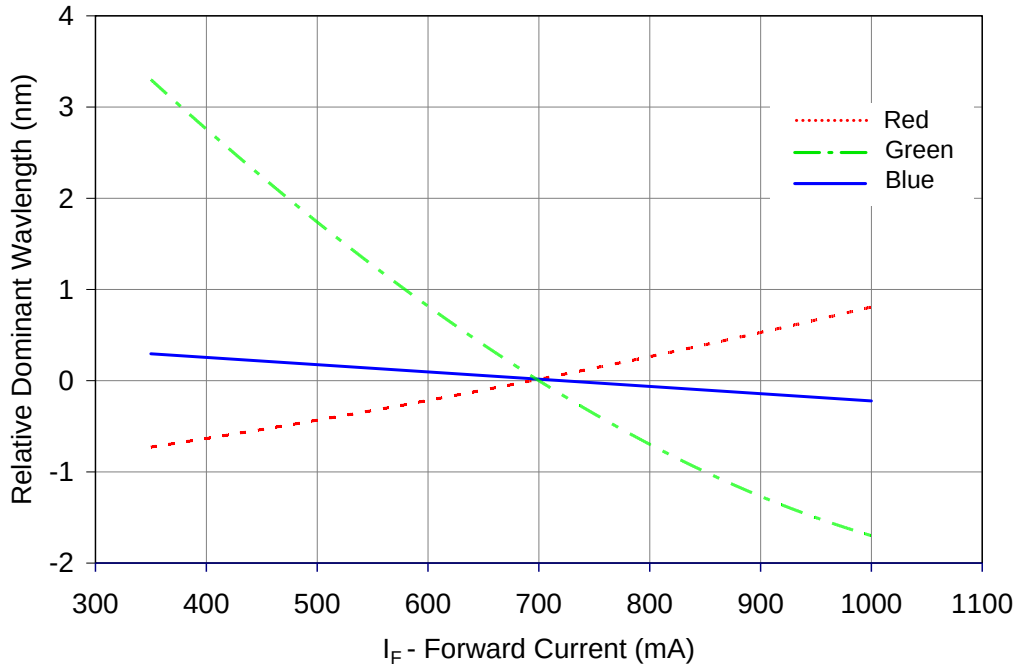

Figure 6: Typical dominant wavelength shift vs. forward current @ T_C = 25°C.

Dominant Wavelength Shift over Temperature

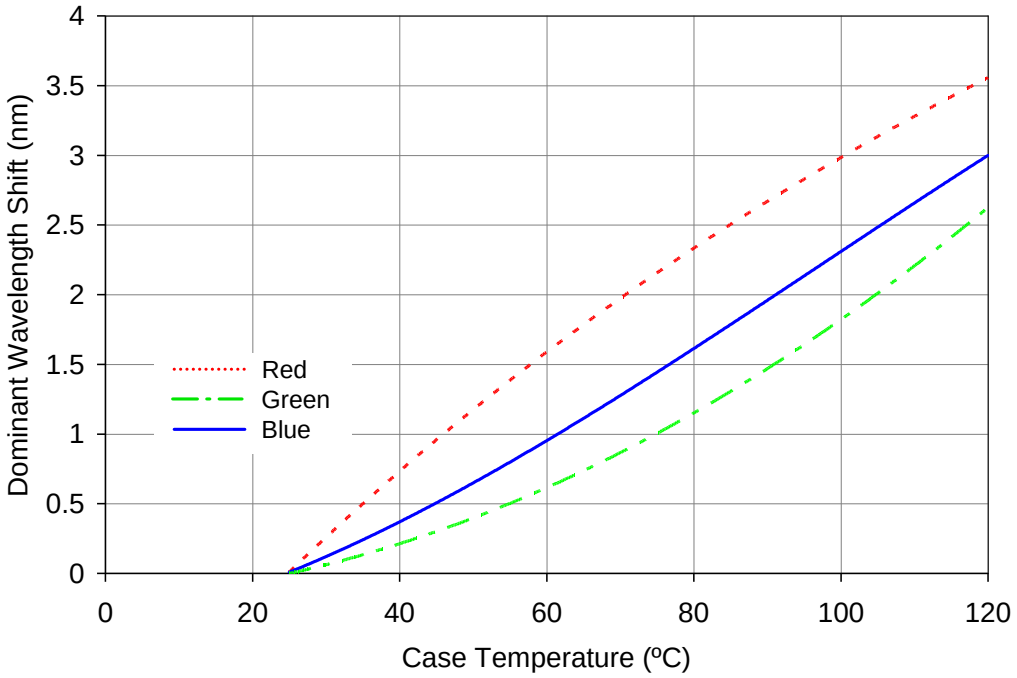

Figure 7: Typical dominant wavelength shift vs. case temperature.

COPYRIGHT © 2013 LED ENGIN. ALL RIGHTS RESERVED.

LED Engin | 651 River Oaks Parkway | San Jose, CA 95134 USA | **ph** +1 408 922 7200 | **fax** +1 408 922 0158 | **em** sales@ledengin.com | www.ledengin.com

Typical Relative Light Output

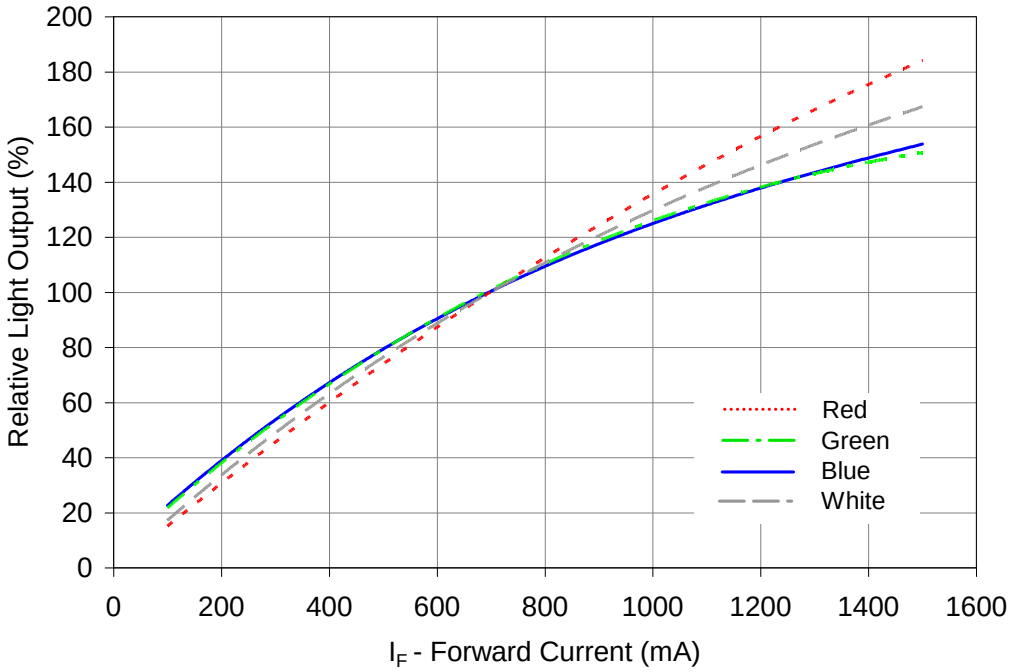

Figure 8: Typical relative light output vs. forward current @ T_C = 25°C.

Typical Relative Light Output over Temperature

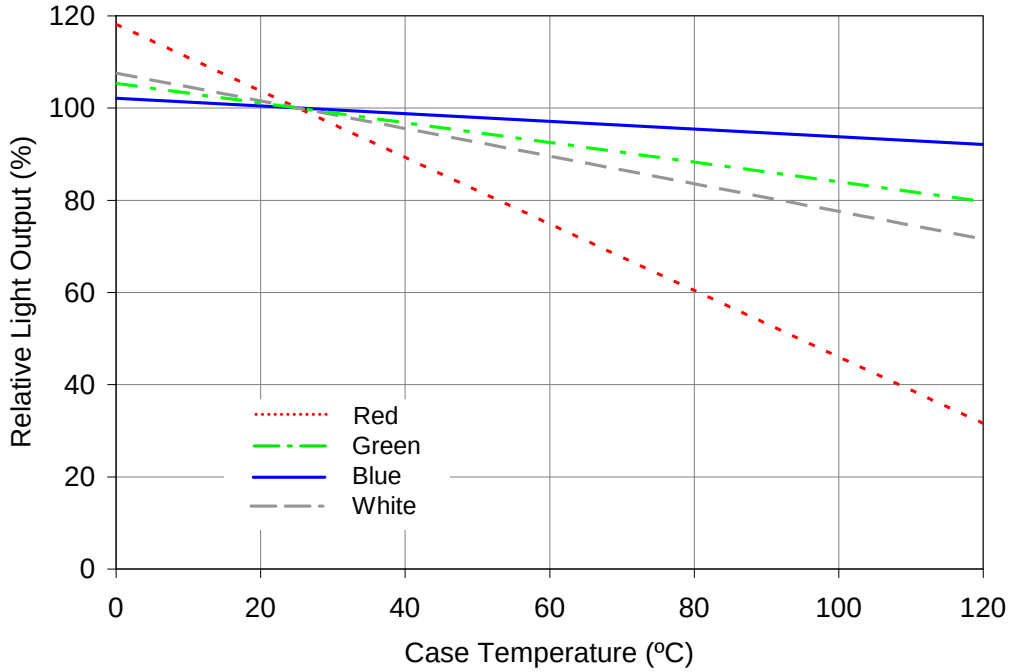

Figure 9: Typical relative light output vs. case temperature.

COPYRIGHT © 2013 LED ENGIN. ALL RIGHTS RESERVED.

LED Engin | 651 River Oaks Parkway | San Jose, CA 95134 USA | **ph** +1 408 922 7200 | **fax** +1 408 922 0158 | **em** sales@ledengin.com | www.ledengin.com

Typical Forward Current Characteristics

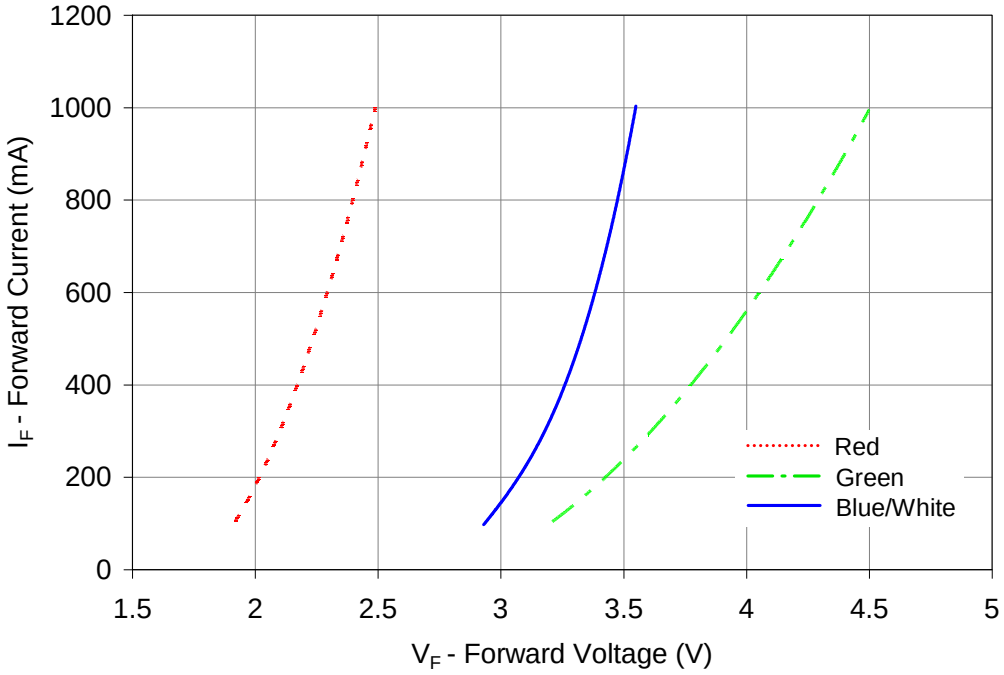

Figure 10: Typical forward current vs. forward voltage @ T_C = 25°C.

Current De-rating

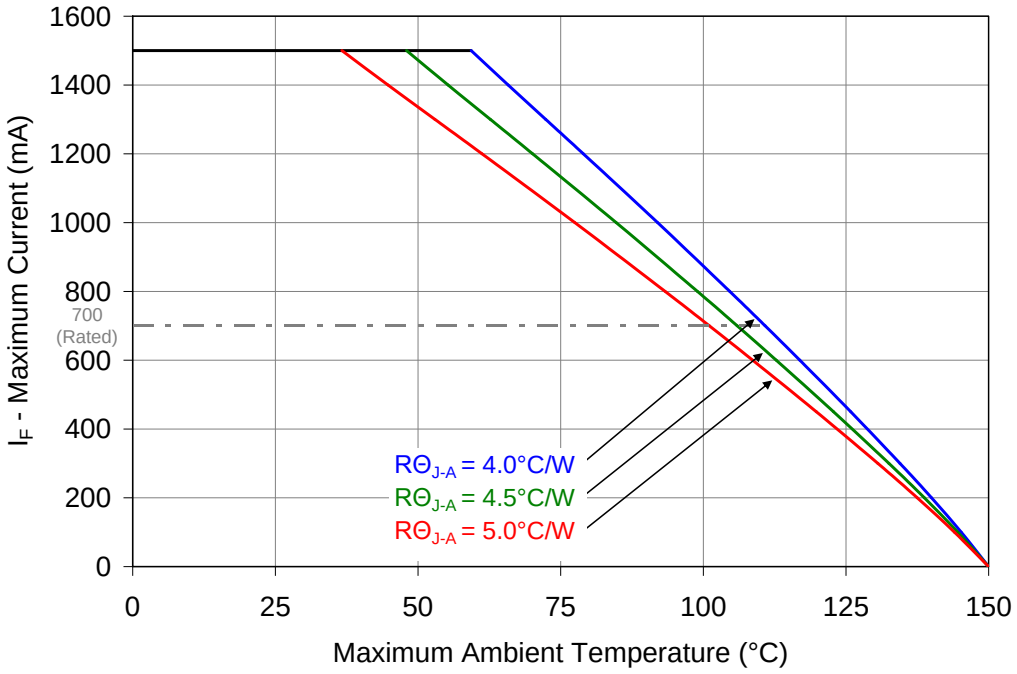

Figure 11: Maximum forward current vs. ambient temperature based on $T_{J(MAX)}$ = 150°C.

Notes for Figure 11:

1. Maximum current assumes that all four LED dice are operating concurrently at the same current.
2. $R\Theta_{J-C}$ [Junction to Case Thermal Resistance] for the LZ4-00MD00 is typically 1.1°C/W.
3. $R\Theta_{J-A}$ [Junction to Ambient Thermal Resistance] = $R\Theta_{J-C}$ + $R\Theta_{C-A}$ [Case to Ambient Thermal Resistance].

COPYRIGHT © 2013 LED ENGIN. ALL RIGHTS RESERVED.

LED Engin | 651 River Oaks Parkway | San Jose, CA 95134 USA | **ph** +1 408 922 7200 | **fax** +1 408 922 0158 | **em** sales@ledengin.com | www.ledengin.com

Emitter Tape and Reel Specifications (mm)

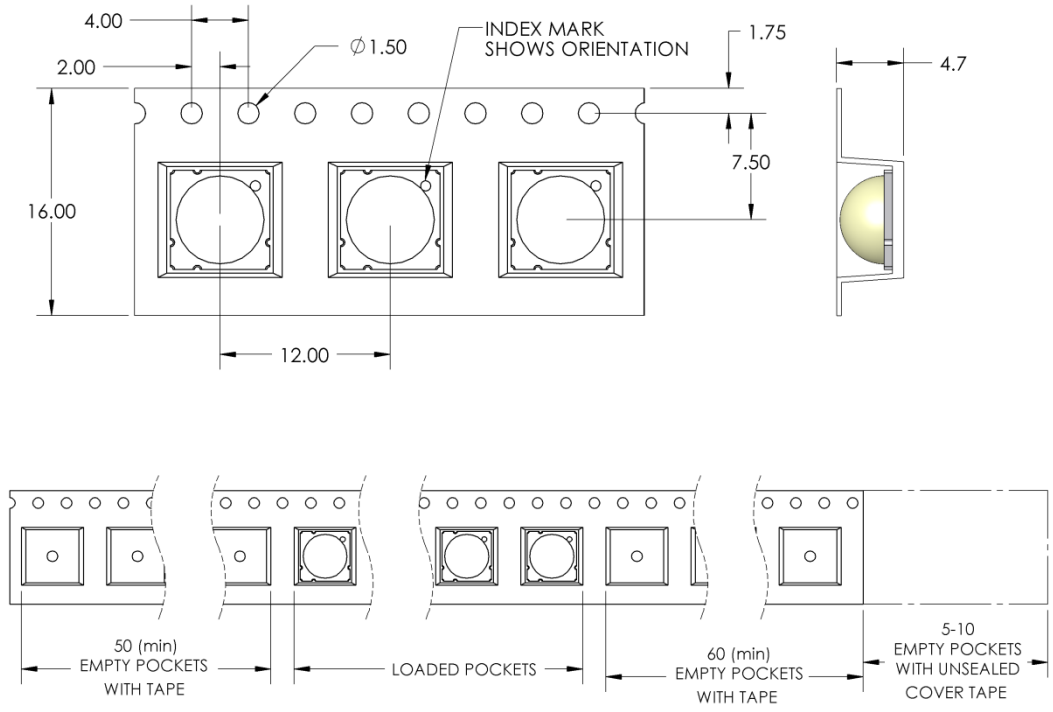

Figure 12: Emitter carrier tape specifications (mm).

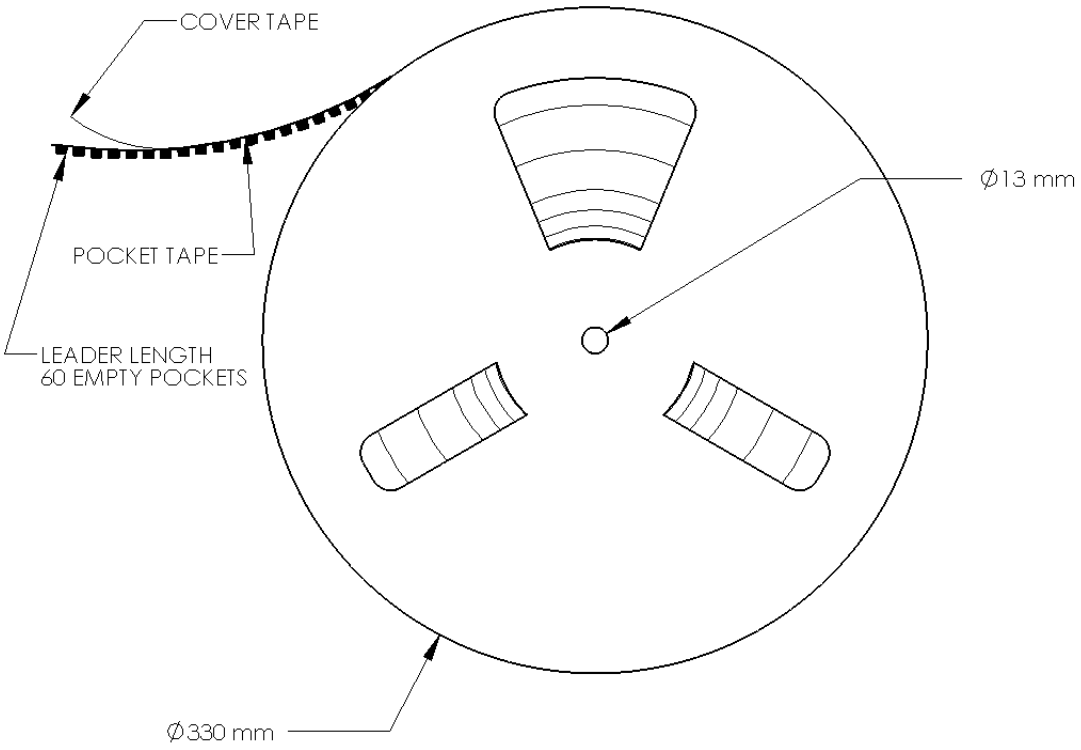

Figure 13: Emitter reel specifications (mm).

COPYRIGHT © 2013 LED ENGIN. ALL RIGHTS RESERVED.

LED Engin | 651 River Oaks Parkway | San Jose, CA 95134 USA | **ph** +1 408 922 7200 | **fax** +1 408 922 0158 | **em** sales@ledengin.com | www.ledengin.com

LZ4 MCPCB Family

Part number	Type of MCPCB	Diameter (mm)	Emitter + MCPCB Thermal Resistance ($^oC/W$)	Typical V_f (V)	Typical I_f (mA)
LZ4-6xxxxx	4-channel	19.9	1.1 + 0.2 = 1.3	2.2 – 3.4	700

Mechanical Mounting of MCPCB

- MCPCB bending should be avoided as it will cause mechanical stress on the emitter, which could lead to substrate cracking and subsequently LED dies cracking.
- To avoid MCPCB bending:
  - Special attention needs to be paid to the flatness of the heat sink surface and the torque on the screws.
  - Care must be taken when securing the board to the heat sink. This can be done by tightening three M3 screws (or #4-40) in steps and not all the way through at once. Using fewer than three screws will increase the likelihood of board bending.
  - It is recommended to always use plastics washers in combinations with the three screws.
  - If non-taped holes are used with self-tapping screws, it is advised to back out the screws slightly after tightening (with controlled torque) and then re-tighten the screws again.

Thermal interface material

- To properly transfer heat from LED emitter to heat sink, a thermally conductive material is required when mounting the MCPCB on to the heat sink.
- There are several varieties of such material: thermal paste, thermal pads, phase change materials and thermal epoxies. An example of such material is Electrolube EHTC.
- It is critical to verify the material's thermal resistance to be sufficient for the selected emitter and its operating conditions.

Wire soldering

- To ease soldering wire to MCPCB process, it is advised to preheat the MCPCB on a hot plate of 125-150°C. Subsequently, apply the solder and additional heat from the solder iron will initiate a good solder reflow. It is recommended to use a solder iron of more than 60W.
- It is advised to use lead-free, no-clean solder. For example: SN-96.5 AG-3.0 CU 0.5 #58/275 from Kester (pn: 24-7068-7601)

COPYRIGHT © 2013 LED ENGIN. ALL RIGHTS RESERVED.

LZ4-6xxxxx

4 channel, Standard Star MCPCB (4x1) for LZ4 pin aligned emitter Dimensions (mm)

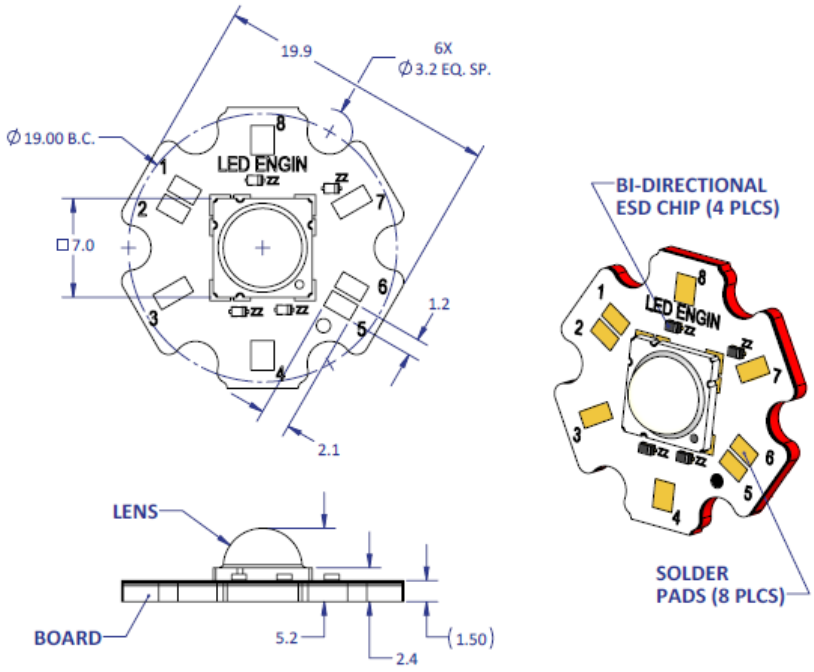

Notes:

- Unless otherwise noted, the tolerance = ± 0.2 mm.
- Slots in MCPCB are for M3 or #4-40 mounting screws.
- LED Engin recommends plastic washers to electrically insulate screws from solder pads and electrical traces.
- LED Engin recommends using thermal interface material when attaching the MCPCB to a heatsink.
- The thermal resistance of the MCPCB is: RΘC-B 0.2°C/W

Components used

MCPCB: MHE-301 (Rayben)
ESD chips: VBUS05L1-DD1 (Vishay, for 1 LED die)

Pad layout			
Ch.	**MCPCB Pad**	**String/die**	**Function**
1	1	1/A	Cathode -
	8		Anode +
2	2	2/D	Cathode -
	7		Anode +
3	3	3/B	Cathode -
	6		Anode +
4	4	4/C	Cathode -
	5		Anode +

COPYRIGHT © 2013 LED ENGIN. ALL RIGHTS RESERVED.

LED Engin | 651 River Oaks Parkway | San Jose, CA 95134 USA | **ph** +1 408 922 7200 | **fax** +1 408 922 0158 | **em** sales@ledengin.com | www.ledengin.com

Company Information

LED Engin, Inc., based in California's Silicon Valley, specializes in ultra-bright, ultra compact solid state lighting solutions allowing lighting designers & engineers the freedom to create uncompromised yet energy efficient lighting experiences. The LuxiGen™ Platform — an emitter and lens combination or integrated module solution, delivers superior flexibility in light output, ranging from 3W to 90W, a wide spectrum of available colors, including whites, multi-color and UV, and the ability to deliver upwards of 5,000 high quality lumens to a target. The small size combined with powerful output allows for a previously unobtainable freedom of design wherever high-flux density, directional light is required. LED Engin's packaging technologies lead the industry with products that feature lowest thermal resistance, highest flux density and consummate reliability, enabling compact and efficient solid state lighting solutions.

LED Engin is committed to providing products that conserve natural resources and reduce greenhouse emissions.

LED Engin reserves the right to make changes to improve performance without notice.

Please contact sales@ledengin.com or (408) 922-7200 for more information.

COPYRIGHT © 2013 LED ENGIN. ALL RIGHTS RESERVED.

Компания «ЭлектроПласт» предлагает заключение долгосрочных отношений при поставках импортных электронных компонентов на взаимовыгодных условиях!

Наши преимущества:

- Оперативные поставки широкого спектра электронных компонентов отечественного и импортного производства напрямую от производителей и с крупнейших мировых складов;
- Поставка более 17-ти миллионов наименований электронных компонентов;
- Поставка сложных, дефицитных, либо снятых с производства позиций;
- Оперативные сроки поставки под заказ (от 5 рабочих дней);
- Экспресс доставка в любую точку России;
- Техническая поддержка проекта, помощь в подборе аналогов, поставка прототипов;
- Система менеджмента качества сертифицирована по Международному стандарту ISO 9001;
- Лицензия ФСБ на осуществление работ с использованием сведений, составляющих государственную тайну;
- Поставка специализированных компонентов (Xilinx, Altera, Analog Devices, Intersil, Interpoint, Microsemi, Aeroflex, Peregrine, Syfer, Eurofarad, Texas Instrument, Miteq, Cobham, E2V, MA-COM, Hittite, Mini-Circuits,General Dynamics и др.);

Помимо этого, одним из направлений компании «ЭлектроПласт» является направление «Источники питания». Мы предлагаем Вам помощь Конструкторского отдела:

- Подбор оптимального решения, техническое обоснование при выборе компонента;
- Подбор аналогов;
- Консультации по применению компонента;
- Поставка образцов и прототипов;
- Техническая поддержка проекта;
- Защита от снятия компонента с производства.

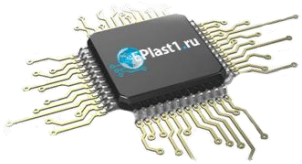

Как с нами связаться

Телефон: 8 (812) 309 58 32 (многоканальный)
Факс: 8 (812) 320-02-42
Электронная почта: org@eplast1.ru
Адрес: 198099, г. Санкт-Петербург, ул. Калинина, дом 2, корпус 4, литера А.