STACO
ENERGY PRODUCTS CO.

Variable Transformers
Series 1200 • 5.0 to 12.0 Amperes

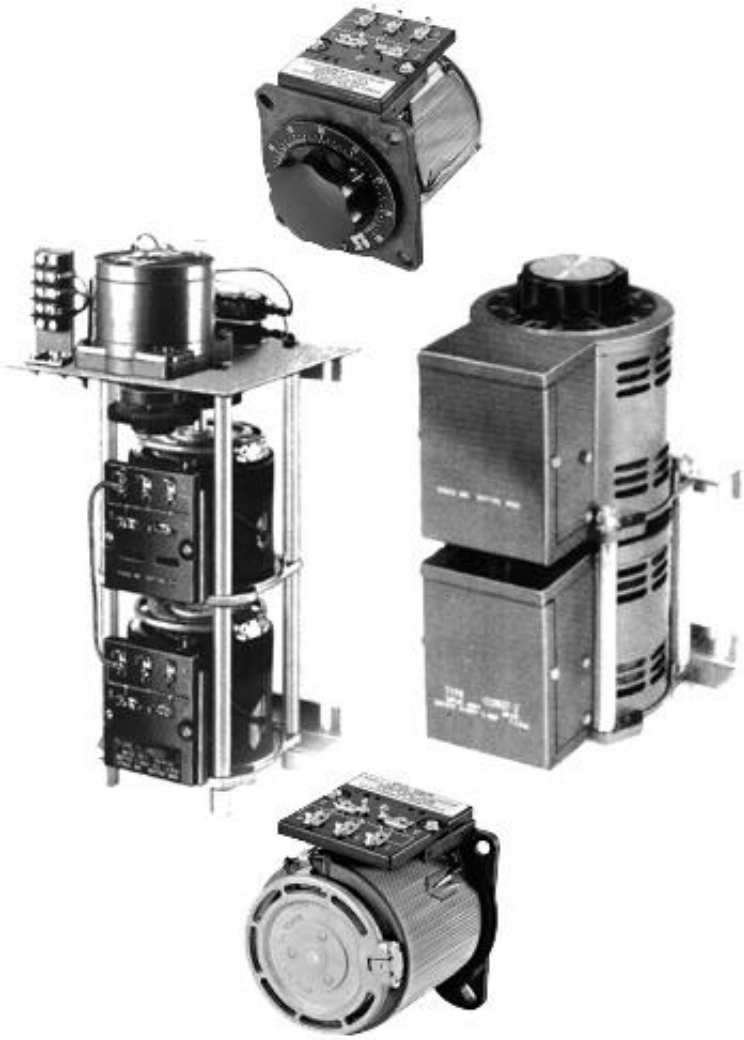

1000/1200 Series

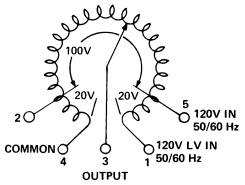

VIEW FROM BASE END
For opposite rotation interchange external connections from 5 to 2 and 4 to 1. Terminals 2 and 5 omitted on 1210.

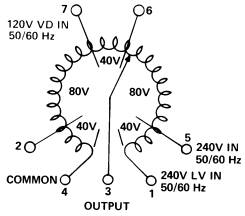

VIEW FROM BASE END
For opposite rotation interchange external connections from 5 to 2, 4 to 1 and 7 to 6. Terminals 2, 5, 6 and 7 omitted on 1220.

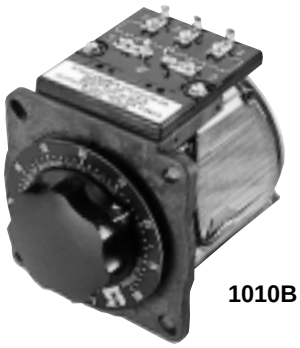

1010B

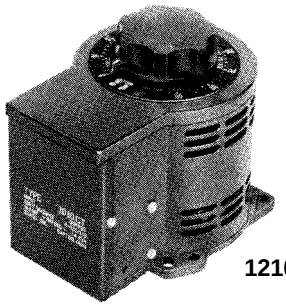

1210BCT

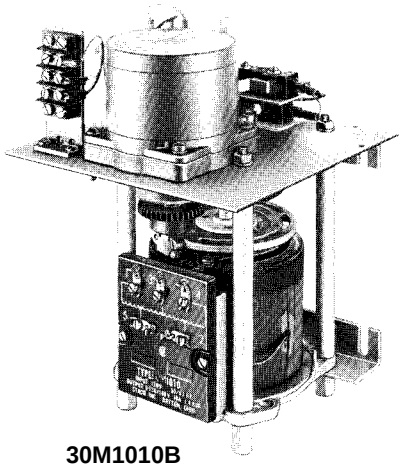

30M1010B

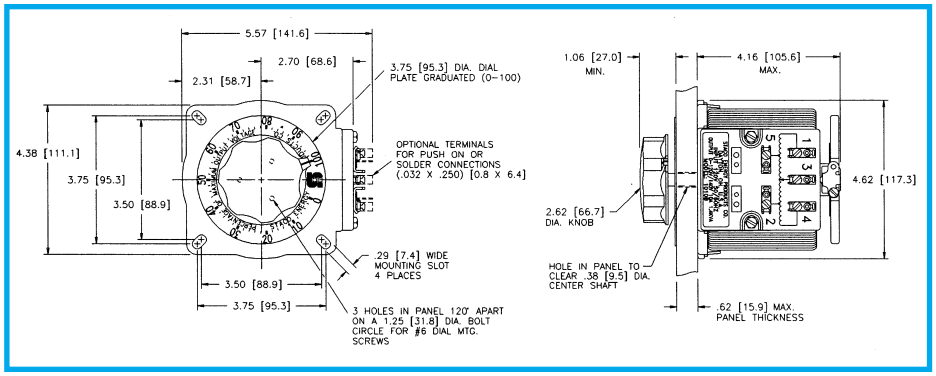

Single Unit, Uncased

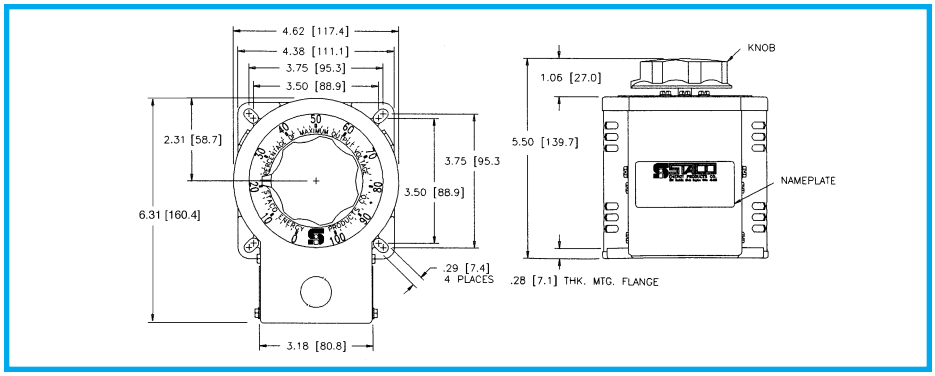

Single Unit, Cased

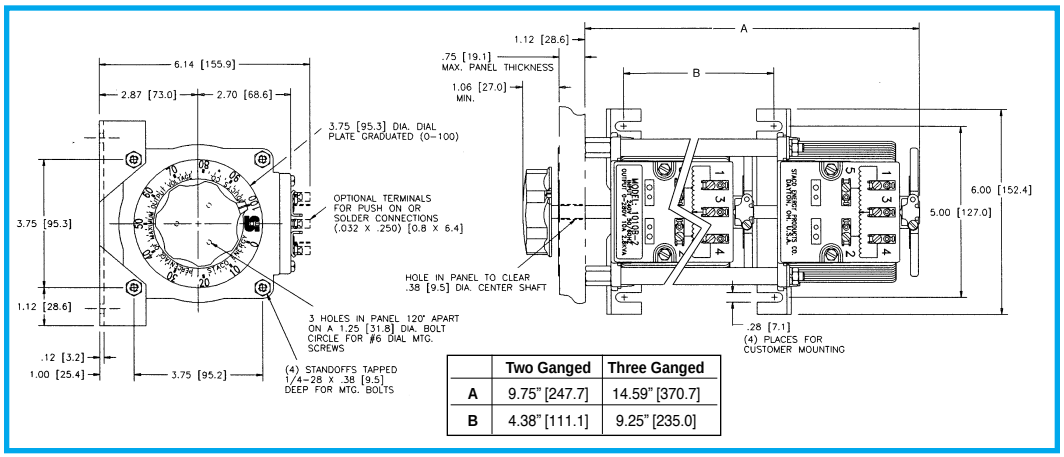

	Two Ganged	Three Ganged
A	9.75" [247.7]	14.59" [370.7]
B	4.38" [111.1]	9.25" [235.0]

Two and Three Ganged, Uncased

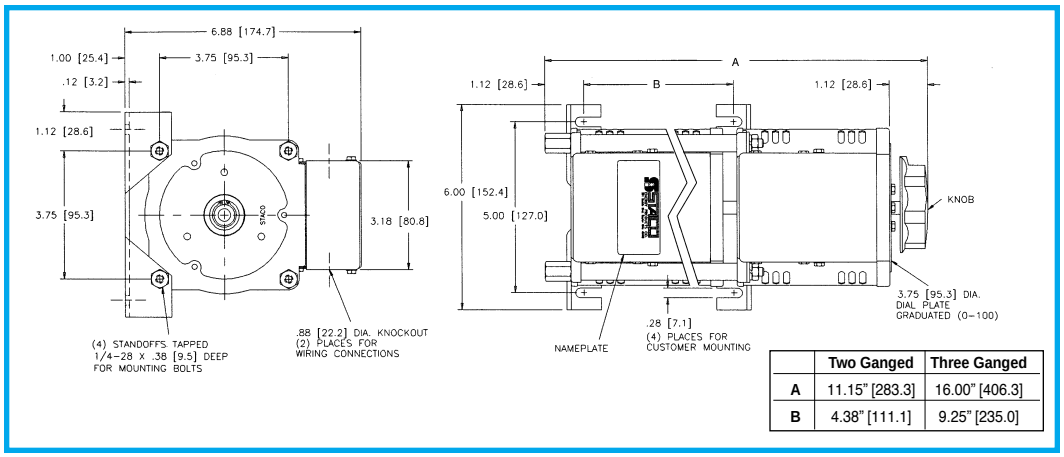

	Two Ganged	Three Ganged
A	11.15" [283.3]	16.00" [406.3]
B	4.38" [111.1]	9.25" [235.0]

Two and Three Ganged, Cased

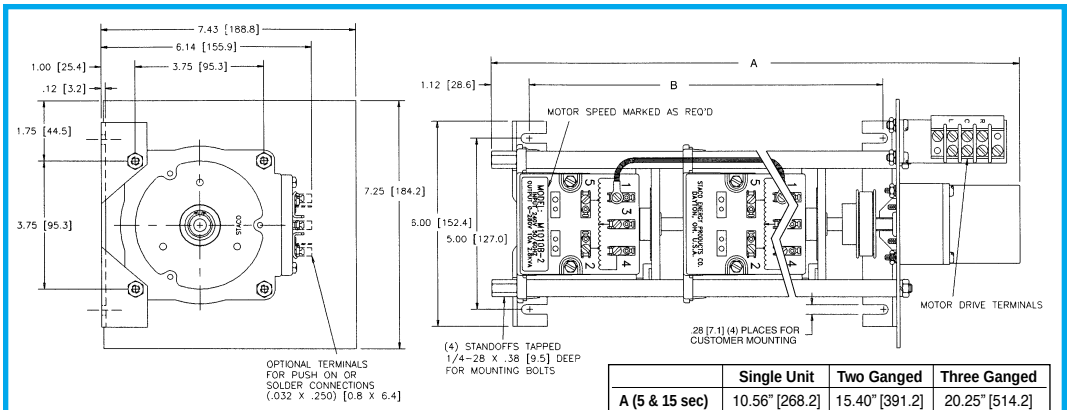

	Single Unit	Two Ganged	Three Ganged
A (5 & 15 sec)	10.56" [268.2]	15.40" [391.2]	20.25" [514.2]
A (30 & 60 sec)	10.95" [278.1]	15.79" [401.1]	20.64" [524.2]
B	5.50" [139.7]	10.31" [261.9]	15.12" [384.2]

1210B
Front View

Motorized Single, Two and Three Ganged, Uncased

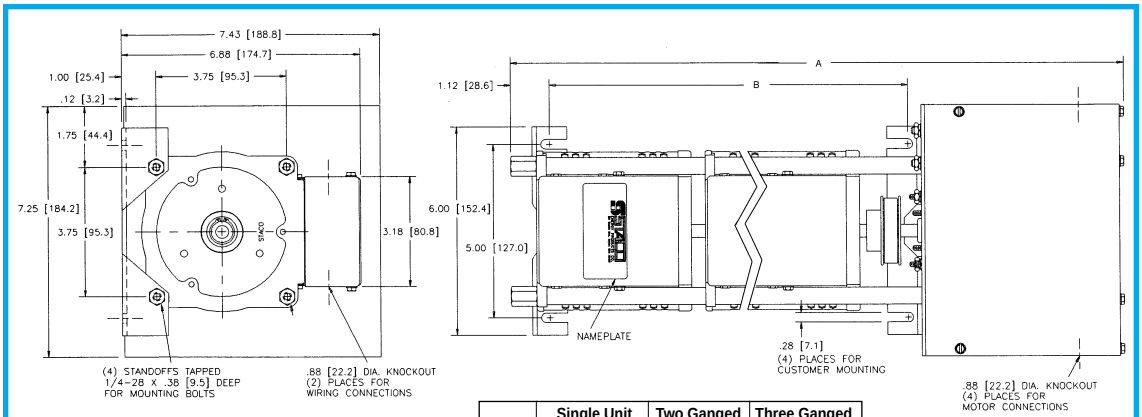

	Single Unit	Two Ganged	Three Ganged
A	12.79" [324.8]	17.63" [447.8]	22.47" [570.82]
B	5.50" [139.7]	10.31" [261.9]	15.12" [384.2]

1210B
Rear View

Motorized Single, Two and Three Ganged, Cased

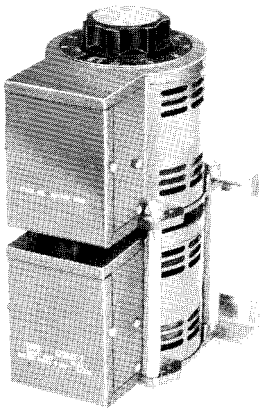

1220BCT-2

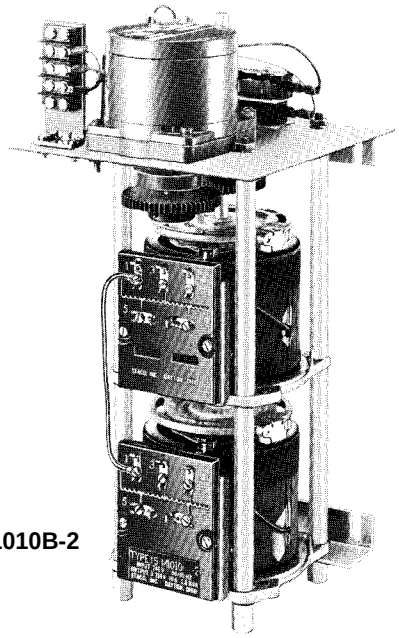

15M1010B-2

The 1210B operates on 120 volts and is rated for constant current of 12 amperes. The 1220B operates on 240 volts and constant current of 5 amperes. The 1210B and 1220B operate from 0 to line voltage only. There is no reduction in allowable output current up to 1500 hertz.

Uncased models have the shaft extending from the base end. This shaft is fully adjustable and can be extended from either end for general utility mounting. Cased styles, which have a “CT” suffix, feature the protective screening over the coil assembly and a terminal box cover with knock-outs to accept conduit.

Motor driven units are available in single, two and three ganged assemblies; cased or uncased styles as identified by the prefix “M” in the type number. If a motor driven model is ordered, be sure to prefix the part number with the desired travel time from 0 to maximum of 5, 15, 30, or 60 seconds.

The synchronous motor is designed for operation on 120 volts, 50/60 hertz single phase lines and draws approximately 0.3 amperes.

PART NO.	WIRING	INPUT		OUTPUT					SHAFT ROTATION FOR VOLTAGE INCREASE	TERMINAL CONNECTIONS (For increasing Voltage) As Viewed from Base End			SCHE-MATIC (Pg 8 & 9)	NET WT. LBS.	(Max) MOTOR DRIVEN
		VOLTS	HERTZ	VOLTS	CONSTANT CURRENT LOAD		CONSTANT IMPEDANCE LOAD			Input	Jumper•	Output			
					MAX AMPS	MAX KVA	MAX AMPS	MAX KVA							
1210B 1210BCT M1210B† M1210BCT†	Single Phase	120	60	0-120	12	1.44	15	1.80	CW	1-4	—	4-3	13	10 1/4	16 3/4
									CCW	1-4	—	1-3			
1210B-2 1210BCT-2 M1210B-2† M1210BCT-2†	Single Phase Series	240	60	0-240	12	2.88	15	3.60	CW	1-1	4-4	3-3	13 & 4	22 1/2	30 3/4
									CCW	4-4	1-1	3-3			
	Three Phase Open Delta π	120++	60	0-120	12	2.49	15	3.12	CW	1-4-1	4-4	3-4-3	13 & 5		
									CCW	4-1-4	1-1	3-1-3			
1210B-3 1210BCT-3 M1210B-3† M1210BCT-3†	Three Phase Wye π	240++	60	0-240	12	4.96	15	6.24	CW	1-1-1	4-4-4	3-3-3	13 & 6	34 1/2	42 1/4
									CCW	4-4-4	1-1-1	3-3-3			
3PN1210B	Single Phase	120	60	0-120	12‡	1.44	15	1.80	CW	LINE CORD & RECEPTACLE			11	10 1/4	—
1220B 1220BCT M1220B† M1220BCT†	Single Phase	240	60	0-240	5.0	1.20	7.0	1.68	CW	1-4	—	4-3	13	10 1/4	16 3/4
									CCW	1-4	—	1-3			
1220B-2 1220BCT-2 M1220B-2† M1220BCT-2†	Single Phase Series	480	60	0-480	5.0	2.40	7.0	3.36	CW	1-1	4-4	3-3	13 & 4	22 1/2	30 3/4
									CCW	4-4	1-1	3-3			
	Three Phase Open Delta π	240++	60	0-240	5.0	2.08	7.0	2.91	CW	1-4-1	4-4	3-4-3	13 & 5		
									CCW	4-1-4	1-1	3-1-3			
1220B-3 1220BCT-3 M1220B-3† M1220BCT-3†	Three Phase Wye π	480++	60	0-480	5.0	4.16	7.0	5.82	CW	1-1-1	4-4-4	3-3-3	13 & 6	34 1/2	42 1/4
									CCW	4-4-4	1-1-1	3-3-3			
3PN1220B	Single Phase	240	60	0-240	5.0‡	1.20	7.0	1.68	CW	LINE CORD & RECEPTACLE			11	10 1/4	—

• Jumper provided in the standard common position and should be moved or removed as required.

++ Line to line voltage

‡ Unit is fused for the constant current rating at the factory.

† Motor driven units use terminal connections for CCW increasing voltage, as viewed from the base end. See Figure 23 on page 9 for motor wiring.

π If ganged units are used in a system that ordinarily has a common neutral or ground between source and load, the neutral or ground must be connected to the common terminals of the variable transformer assembly. If the system has no neutral, the load must be balanced or the transformers will be damaged.

Maximum output current in output voltage range from 0 to 25% above line voltage. At higher output voltages, the output current must be reduced according to the derating curve, Figure B, page 6.

Компания «ЭлектроПласт» предлагает заключение долгосрочных отношений при поставках импортных электронных компонентов на взаимовыгодных условиях!

Наши преимущества:

- Оперативные поставки широкого спектра электронных компонентов отечественного и импортного производства напрямую от производителей и с крупнейших мировых складов;
- Поставка более 17-ти миллионов наименований электронных компонентов;
- Поставка сложных, дефицитных, либо снятых с производства позиций;
- Оперативные сроки поставки под заказ (от 5 рабочих дней);
- Экспресс доставка в любую точку России;
- Техническая поддержка проекта, помощь в подборе аналогов, поставка прототипов;
- Система менеджмента качества сертифицирована по Международному стандарту ISO 9001;
- Лицензия ФСБ на осуществление работ с использованием сведений, составляющих государственную тайну;
- Поставка специализированных компонентов (Xilinx, Altera, Analog Devices, Intersil, Interpoint, Microsemi, Aeroflex, Peregrine, Syfer, Eurofarad, Texas Instrument, Miteq, Cobham, E2V, MA-COM, Hittite, Mini-Circuits,General Dynamics и др.);

Помимо этого, одним из направлений компании «ЭлектроПласт» является направление «Источники питания». Мы предлагаем Вам помощь Конструкторского отдела:

- Подбор оптимального решения, техническое обоснование при выборе компонента;
- Подбор аналогов;
- Консультации по применению компонента;
- Поставка образцов и прототипов;
- Техническая поддержка проекта;
- Защита от снятия компонента с производства.

Как с нами связаться

Телефон: 8 (812) 309 58 32 (многоканальный)
Факс: 8 (812) 320-02-42
Электронная почта: org@eplast1.ru
Адрес: 198099, г. Санкт-Петербург, ул. Калинина, дом 2, корпус 4, литера А.