SNA-586

DC-5 GHz, Cascadable GaAs HBT MMIC Amplifier

NGA-586 Recommended for New Designs

Product Description

Stanford Microdevices' SNA-586 is a high performance Gallium Arsenide Heterojunction Bipolar Transistor MMIC Amplifier. A Darlington configuration is utilized for broadband performance up to 5 GHz. The heterojunction increases breakdown voltage and minimizes leakage current between junctions. Cancellation of emitter junction non-linearities results in higher suppression of intermodulation products. Typical IP3 at 850 MHz with 65mA is 32.5 dBm.

These unconditionally stable amplifiers provide 18 dB of gain and 18.4 dBm of 1dB compressed power and require only a single positive voltage supply. Only 2 DC-blocking capacitors, a bias resistor and an optional inductor are needed for operation. This MMIC is an ideal choice for wireless applications such as cellular, PCS, CDPD, wireless data and SONET.

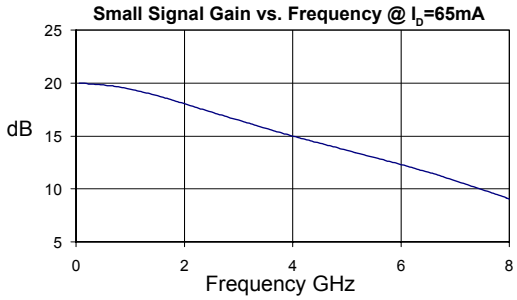

Product Features

- **High Output IP3: 32.5 dBm @ 850 MHz**
- **Cascadable 50 Ohm Gain Block**
- **Patented GaAs HBT Technology**
- **Operates From Single Supply**

Applications

- **Cellular, PCS, CDPD, Wireless Data, SONET**

Electrical Specifications

Symbol	Parameters: Test Conditions: Z_0 = 50 Ohms, I_D = 65mA, T = 25°C		Units	Min.	Typ.	Max.
P_{1dB}	Output Power at 1dB Compression	f = 850 MHz f = 1950 MHz f = 2400 MHz	dBm dBm dBm		17.6 18.4 18.4	
IP_3	Third Order Intercept Point Power out per tone = 0 dBm	f = 850 MHz f = 1950 MHz f = 2400 MHz	dBm dBm dBm		32.5 31.6 31.6	
S_{21}	Small Signal Gain	f = 850 MHz f = 1950 MHz f = 2400 MHz	dB dB dB	17.6	19.6 18.1 17.4	
Bandwidth	(Determined by S_{11}, S_{22} Values)		MHz		5000	
S_{11}	Input VSWR	f = DC-5000 MHz	-		1.4:1	
S_{22}	Output VSWR	f = DC-5000 MHz	-		1.4:1	
S_{12}	Reverse Isolation	f = 850 MHz f = 1950 MHz f = 2400 MHz	dB dB dB		22.3 21.6 21.3	
NF	Noise Figure, Z_S = 50 Ohms	f = 1950 MHz	dB		4.0	
V_D	Device Voltage		V	4.4	4.9	5.4
Rth,j-l	Thermal Resistance (junction - lead)		° C/W		254	

The information provided herein is believed to be reliable at press time. Stanford Microdevices assumes no responsibility for inaccuracies or omissions.
Stanford Microdevices assumes no responsibility for the use of this information, and all such information shall be entirely at the user's own risk. Prices and specifications are subject to change without notice. No patent rights or licenses to any of the circuits described herein are implied or granted to any third party. Stanford Microdevices does not authorize or warrant any Stanford Microdevices product for use in life-support devices and/or systems.
Copyright 2000 Stanford Microdevices, Inc. All worldwide rights reserved.

522 Almanor Ave., Sunnyvale, CA 94085 Phone: (800) SMI-MMIC http://www.stanfordmicro.com

Absolute Maximum Ratings

Operation of this device above any one of these parameters may cause permanent damage.

Bias Conditions should also satisfy the following expression: $I_D V_D$ (max) < (T_J - T_{OP})/Rth, j-l

Parameter	Value	Unit
Supply Current	110	mA
Operating Temperature	-40 to +85	C
Maximum Input Power	16	dBm
Storage Temperature Range	-40 to +150	C
Operating Junction Temperature	+175	C

Parameter	Typical 25°C	Unit	Test Condition (I_D = 65 mA, unless otherwise noted)
500 MHz			
Gain	19.8	dB	
Noise Figure	3.9	dB	Z_S = 50 Ohms
Output IP3	31.8	dBm	Tone spacing = 1 MHz, Pout per tone = 0 dBm
Output P1dB	17.4	dBm	
Input Return Loss	14.1	dB	
Isolation	22.5	dB	
850 MHz			
Gain	19.6	dB	
Noise Figure	4.0	dB	Z_S = 50 Ohms
Output IP3	32.5	dBm	Tone spacing = 1 MHz, Pout per tone = 0 dBm
Output P1dB	17.6	dBm	
Input Return Loss	15.6	dB	
Isolation	22.3	dB	
1950 MHz			
Gain	18.1	dB	
Noise Figure	4.0	dB	Z_S = 50 Ohms
Output IP3	31.6	dBm	Tone spacing = 1 MHz, Pout per tone = 0 dBm
Output P1dB	18.4	dBm	
Input Return Loss	16.6	dB	
Isolation	21.6	dB	
2400 MHz			
Gain	17.4	dB	
Output IP3	31.6	dBm	Tone spacing = 1 MHz, Pout per tone = 0 dBm
Output P1dB	18.4	dBm	
Input Return Loss	16.8	dB	
Isolation	21.3	dB	

***NOTE:** While the SNA-586 can be operated at different bias currents, 65 mA is the recommended bias for lower junction temperature and longer life. This reflects typical operating conditions which we have found to be an optimal balance between high IP3 and MTTF. In general, MTTF is improved to more than 100,000 hours when biasing at 65 mA and operating up to 85°C ambient temperature.

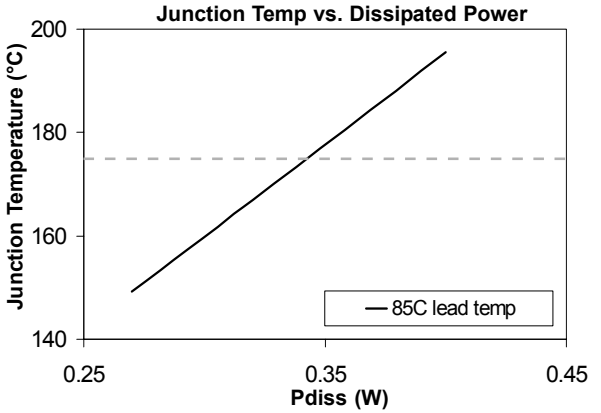
Junction Temp vs. Dissipated Power
Junction Temperature (°C)
200
180
160
140
0.25
0.35
0.45
Pdiss (W)
85C lead temp

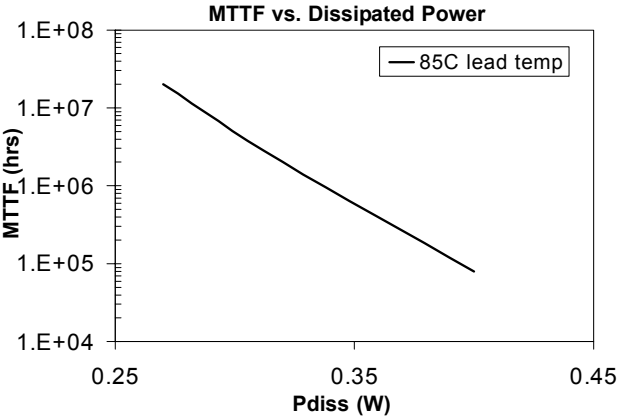
MTTF vs. Dissipated Power
MTTF (hrs)
1.E+08
1.E+07
1.E+06
1.E+05
1.E+04
0.25
0.35
0.45
Pdiss (W)
85C lead temp

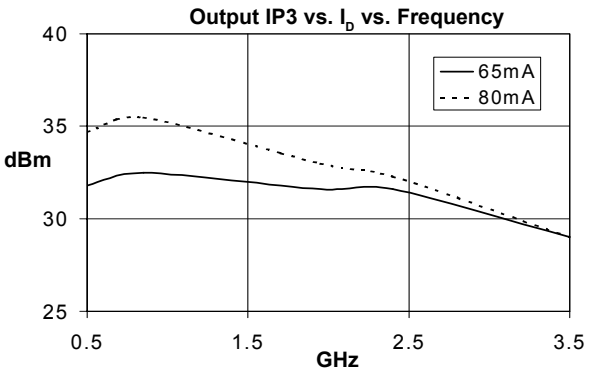
Output IP3 vs. I_D vs. Frequency
dBm
40
35
30
25
0.5
1.5
2.5
3.5
GHz
65mA
80mA

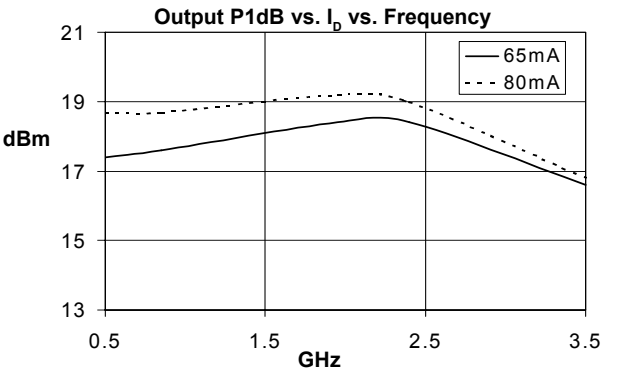
Output P1dB vs. I_D vs. Frequency
dBm
21
19
17
15
13
0.5
1.5
2.5
3.5
GHz
65mA
80mA

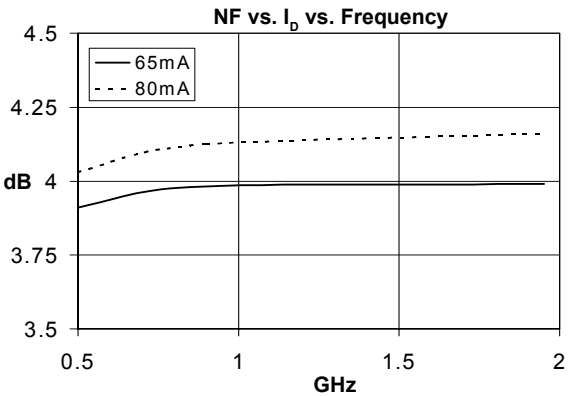
NF vs. I_D vs. Frequency
dB
4.5
4.25
4
3.75
3.5
0.5
1
1.5
2
GHz
65mA
80mA

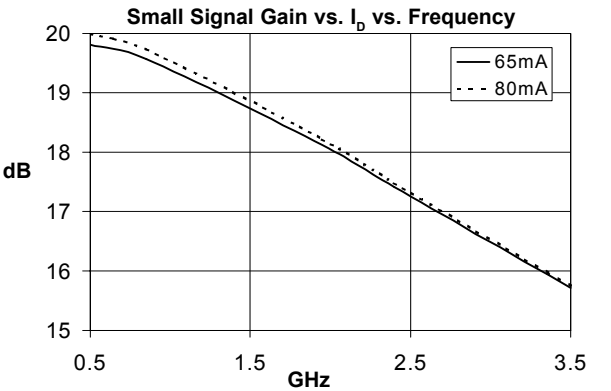
Small Signal Gain vs. I_D vs. Frequency
dB
20
19
18
17
16
15
0.5
1.5
2.5
3.5
GHz
65mA
80mA

Pin #	Function	Description
1	RF IN	RF input pin. This pin requires the use of an external DC blocking capacitor chosen for the frequency of operation.
2	GND	Connection to ground. Use via holes for best performance to reduce lead inductance. Place vias as close to ground leads as possible.
3	RF OUT/Vcc	RF output and bias pin. Bias should be supplied to this pin through an external series resistor and RF choke inductor. Because DC biasing is present on this pin, a DC blocking capacitor should be used in most applications (see application schematic). The supply side of the bias network should be well bypassed.
4	GND	Same as Pin 2.

Application Schematic for Operation at 850 MHz

Recommended Bias Resistor Values				
Supply Voltage(Vs)	8V	9V	12V	15V
Rbias (Ohms) @ 65 mA	47	62	110	160
Rbias (Ohms) @ 80 mA	39	51	91	130

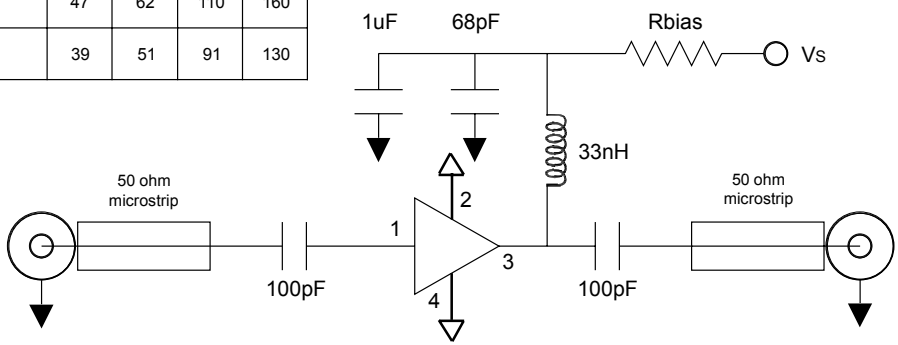

Application Schematic for Operation at 1950 MHz

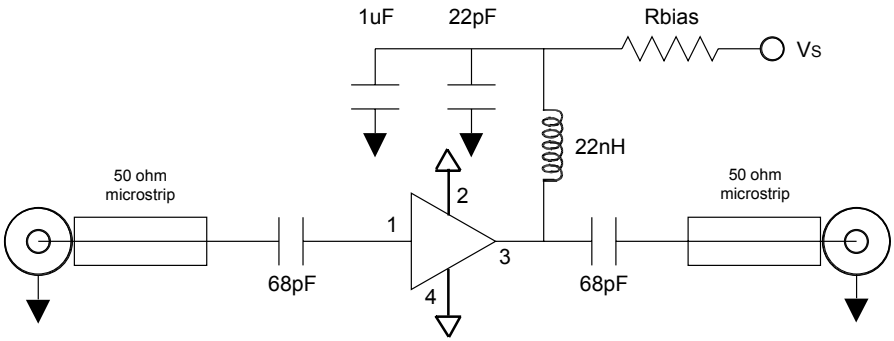

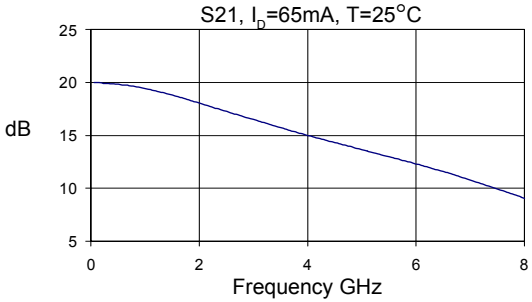
S21, I_D=65mA, T=25°C
dB
25
20
15
10
5
0
2
4
6
8
Frequency GHz

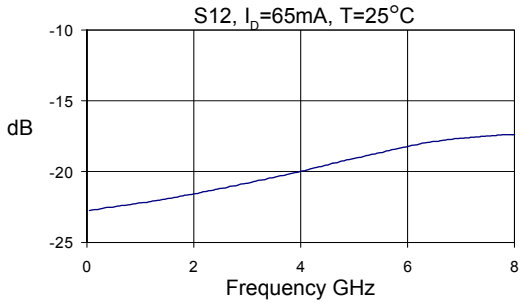
S12, I_D=65mA, T=25°C
dB
-10
-15
-20
-25
0
2
4
6
8
Frequency GHz

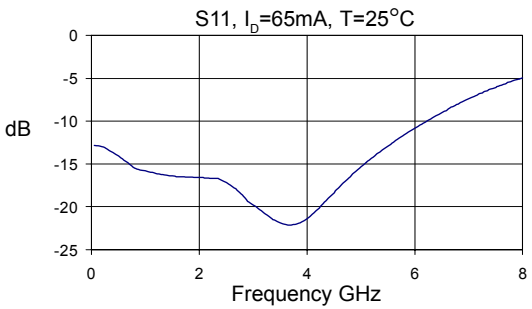
S11, I_D=65mA, T=25°C
dB
0
-5
-10
-15
-20
-25
0
2
4
6
8
Frequency GHz

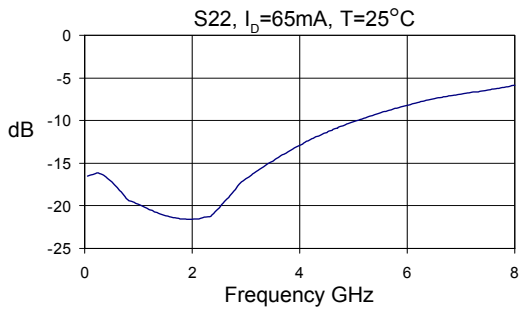
S22, I_D=65mA, T=25°C
dB
0
-5
-10
-15
-20
-25
0
2
4
6
8
Frequency GHz

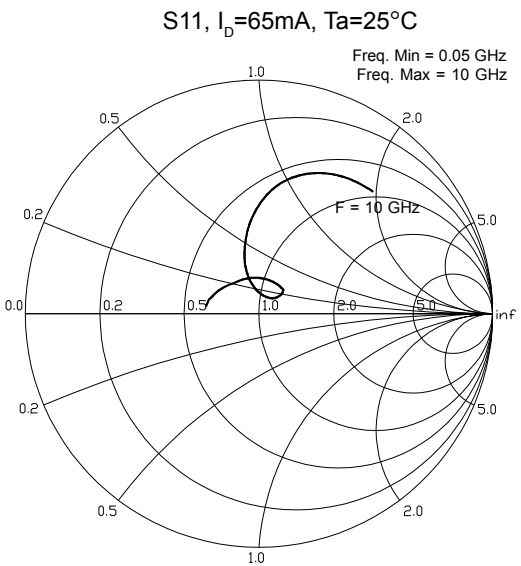
S11, I_D=65mA, Ta=25°C
Freq. Min = 0.05 GHz
Freq. Max = 10 GHz
F = 10 GHz
1.0
0.5
2.0
0.2
5.0
0.0
0.2
0.5
1.0
2.0
5.0
inf
0.2
5.0
0.5
2.0
1.0

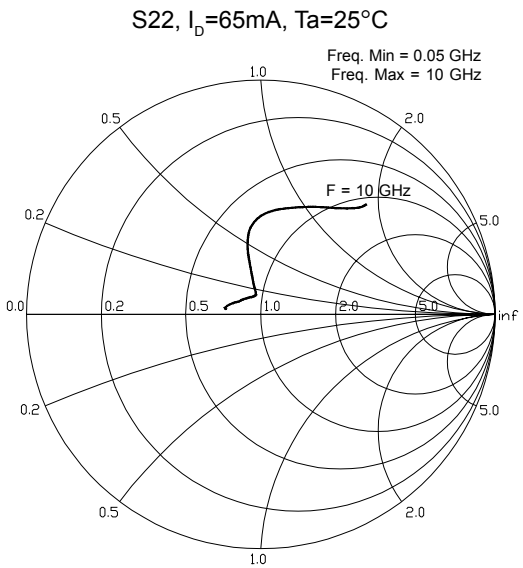
S22, I_D=65mA, Ta=25°C
Freq. Min = 0.05 GHz
Freq. Max = 10 GHz
F = 10 GHz
1.0
0.5
2.0
0.2
5.0
0.0
0.2
0.5
1.0
2.0
5.0
inf
0.2
5.0
0.5
2.0
1.0

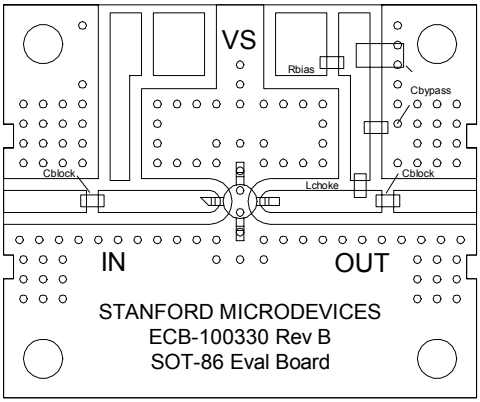

Evaluation Board Layout

SNA-586 DC-5GHz Cascadable MMIC Amplifier

Part Number Ordering Information

Part Number	Reel Size	Devices/Reel
SNA-586	7"	1000

Caution ESD Sensitive:
Appropriate precautions in handling, packaging and testing devices must be observed.

Part Symbolization

The part will be symbolized with an "S5" designator on the top surface of the package.

PCB Pad Layout

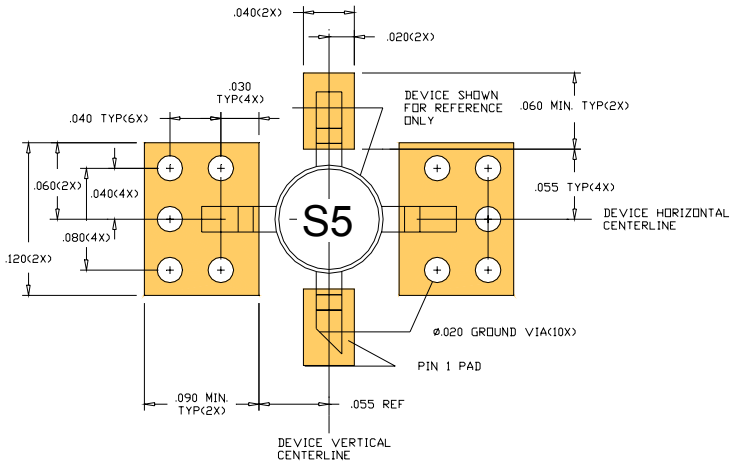

Package Dimensions

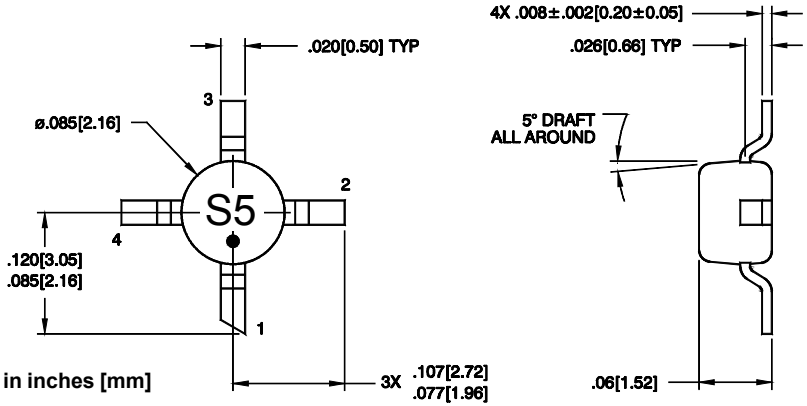

Dimensions are in inches [mm]

Компания «ЭлектроПласт» предлагает заключение долгосрочных отношений при поставках импортных электронных компонентов на взаимовыгодных условиях!

Наши преимущества:

- Оперативные поставки широкого спектра электронных компонентов отечественного и импортного производства напрямую от производителей и с крупнейших мировых складов;
- Поставка более 17-ти миллионов наименований электронных компонентов;
- Поставка сложных, дефицитных, либо снятых с производства позиций;
- Оперативные сроки поставки под заказ (от 5 рабочих дней);
- Экспресс доставка в любую точку России;
- Техническая поддержка проекта, помощь в подборе аналогов, поставка прототипов;
- Система менеджмента качества сертифицирована по Международному стандарту ISO 9001;
- Лицензия ФСБ на осуществление работ с использованием сведений, составляющих государственную тайну;
- Поставка специализированных компонентов (Xilinx, Altera, Analog Devices, Intersil, Interpoint, Microsemi, Aeroflex, Peregrine, Syfer, Eurofarad, Texas Instrument, Miteq, Cobham, E2V, MA-COM, Hittite, Mini-Circuits,General Dynamics и др.);

Помимо этого, одним из направлений компании «ЭлектроПласт» является направление «Источники питания». Мы предлагаем Вам помощь Конструкторского отдела:

- Подбор оптимального решения, техническое обоснование при выборе компонента;
- Подбор аналогов;
- Консультации по применению компонента;
- Поставка образцов и прототипов;
- Техническая поддержка проекта;
- Защита от снятия компонента с производства.

Как с нами связаться

Телефон: 8 (812) 309 58 32 (многоканальный)
Факс: 8 (812) 320-02-42
Электронная почта: org@eplast1.ru
Адрес: 198099, г. Санкт-Петербург, ул. Калинина, дом 2, корпус 4, литера А.