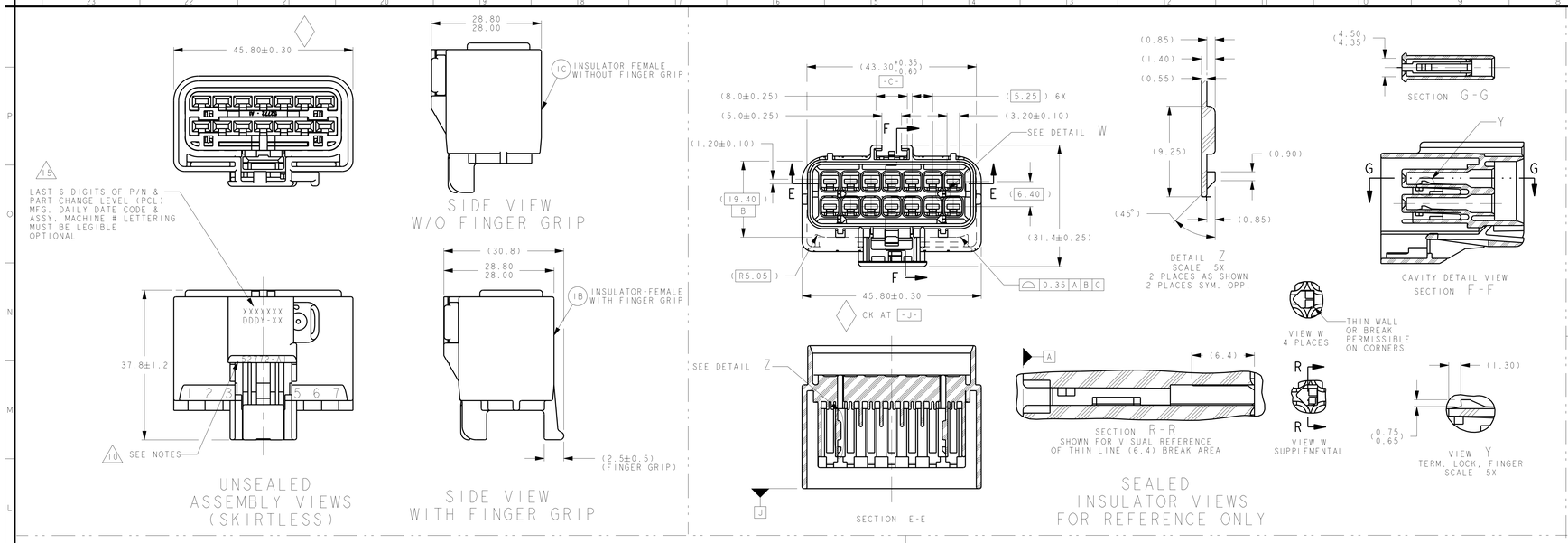

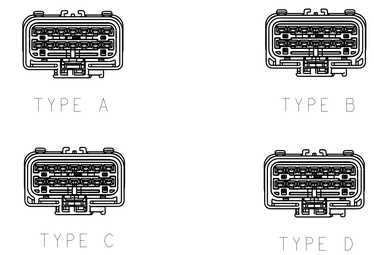

POLARIZATION OPTIONS
FULL SIZE
SHOWN WITH CPA

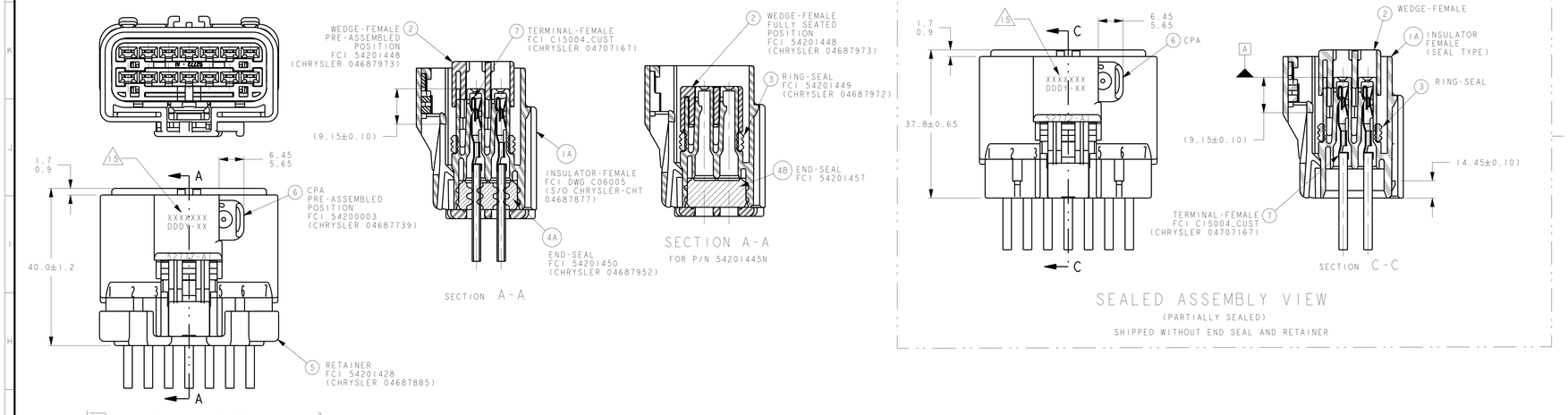

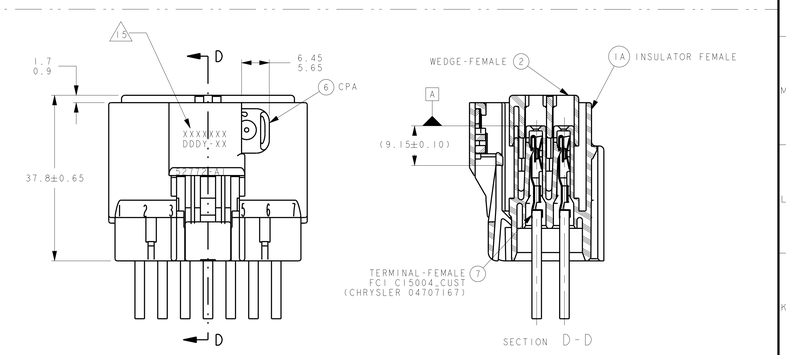

NOTES:

1. QUALITY ASSURANCE REQUIREMENTS PER CHRYSLER PS-7300:1 SPC DATA REQUIRED
2. ENGINEERING APPROVAL OF SUPPLIER SAMPLES IS REQUIRED PRIOR TO AUTHORIZATION OF PART PRODUCTION
3. CHANGES IN DESIGN COMPOSITION OR PROCESSING FROM THE PART PREVIOUSLY APPROVED FOR PART PRODUCTION REQUIRES PRIOR ENGINEERING APPROVAL
4. WIRING FABRICATORS MUST PURCHASE FROM SOURCES SHOWN
5. ALL THE SEALED APPLICATIONS WITH 54201450 END SEAL MUST BE USED WITH CHRYSLER WIRE SPEC. MS-8288 OR MS-9502 THIN WALL X-LINK 20,18, 16, 14 & 12 GAGE WIRES ONLY UNLESS OTHERWISE SPECIFIED (INSULATIONS Ø1.70 MIN TO Ø3.35 MAX.) ISO THIN WALL EQUIVALENTS ALLOWED
5A. P/N'S WITH C855900 END SEAL MUST BE USED WITH WIRE INSULATION RANGE FROM Ø1.90MIN TO 3.70MAX (18AWG TO 12AWG OR 1mm² TO 4mm² ISO THIN WALL)
6. ALL NON-SEALED APPLICATIONS MAY BE USED WITH ANY WIRE INSULATION 22 GAGE THRU 10 GAGE & ISO THIN WALL EQUIVALENTS PROVIDING THAT A TERMINAL GRIP FOR THAT CORE / INSULATION COMBINATION IS SHOWN ON THE FEMALE TERMINAL DRAWING

   MAX. INSULATION CRIMP WIDTH = 4.50
   MAX. INSULATION CRIMP HEIGHT = 4.50
   MAX. INSULATION DIA. =4.09 (10 GA THIN WALL)
7. USE WITH CAVITY PLUG FCI P/N 54200005 (C) 56038308 ON SKIRTED PARTS ONLY WHEN REQUIRED
   USE WITH DOUBLE X-MAS TREE CLIP P/N (C) 04707091 WHEN REQUIRED
   USE WITH DOUBLE X-MAS TREE CLIP P/N (C) 04625797 WHEN REQUIRED
   USE WITH 2.80MM APEX FEMALE TERMINAL PER C15004-CUST SYMMETRICAL ABOUT CENTERLINE FOR 180° ORIENTATION
8. DIRECT CONNECT DRAWING NO. H36014 (CHRYSLER 04707029)
9. TEST METHOD PER CHRYSLER PERFORMANCE SPEC# SAE/USCAR-2 REV 5. CONNECTOR ENGAGE & DISENGAGE WITH LATCH DEPRESSED FORCE NOT TO EXCEED 142N FOR THIS SYSTEM.

   PRESSURE 3 PSI (22 KPA) PER PF-752(T)

   CPA SEATING FORCES - 40N MAX

   WEDGE SEATING FORCES - 142N MAX

   X-MAS TREE CLIP INSERTION FORCES - 75N MAX
10. SUPPLIER, MOLD & CAVITY I.D SINGIFIES TOOL OWNERSHIP, FOR REFERENCE
11. ANNUAL QUALITY REQUIREMENTS:
   IT IS PERMISSBLE TO PERFORM CONTINUOUS CONFORMANCE PER FCI SPECIFICATION #AQA-001 INSTEAD OF ANNUAL LAYOUT & ANNUAL PV REQUIREMENTS OF QS-9000 SECTION 2 & SAE/USCAR-2 REV 5

   ALL NON-REFERENCE DIMENSIONS ARE REQUIRED

   - USE INDEX A, BLACK SEALED AND UNSEALED FOR ALL AFFECTED INSULATOR CAVITIES
   - CURRENT PRODUCTION TOOLING
   - POINT OF LAST RUN

   SERVICE TOOLING GUIDE INFORMATION PER APEX TRAINING MANUAL
12. MUST CONFORM TO THE FOLLOWING CHRYSLER/YNA STANDARDS:

   SAE/USCAR-2 REV-5 EXCEPT AS NOTED ABOVE
   PS-7300 QUALITY ASSURANCE (CHRYSLER)
   PS-4480-CEK-4 (CHRYSLER) PART I.D., (G-009-2 YNA)
   PS-9065 REGRIND (CHRYSLER), (G-009-3 YNA)
   PS-9227 DATA EXCHANGE (CHRYSLER), (G-009-7 YNA)
   PS-10052 INFORMATION SECURITY (CHRYSLER)
13. THIS DRAWING (H59008) REPLACES CHRYSLER DRAWING NUMBER 04687876 LEVEL "N" CHRYSLER DRAWING IS FOR REFERENCE ONLY
14. FCI P/N'S WITH SUFFIX "N" DESIGNATES ASSEMBLIES W/O CPA
15. SEE ZONE N21 FOR PART IDENTIFICATION CALL OUT

* INDICATES END SEAL 54201450 OR C855900 & RETAINER 54201428 OR HINGE TYPE PROVIDED LOOSE PIECE AND INSTALLED AT WIRE HARNESS ASSEMBLY, SEE HARNESS ASSEMBLY FOR HINGE RETAINER P/N

MATING PART NUMBER CHART

INDEX TYPE	COLOR	SEALED / UNSEALED	FCI	CUSTOMER	OTHER CUSTOMERS	FCI	CHRYSLER	OTHER CUSTOMERS
			FEMALE ASSEMBLY PART NUMBERS			(MATING ASSEMBLY PART NUMBERS)		
D	LT GREEN	UNSEALED	54201452N	N/A	N/A	DIRECT CONNECT APPLICATION INDEX D		
		UNSEALED	54201452	(C) 04868345AA	N/A	DIRECT CONNECT APPLICATION INDEX D		
	NATURAL	UNSEALED	54201467	N/A	N/A	54201468	N/A	N/A
		UNSEALED	54201403N	N/A	N/A	DIRECT CONNECT APPLICATION INDEX D		
		UNSEALED	54201403	(C) 04687932	YNA 7283-4649	DIRECT CONNECT APPLICATION INDEX D		
		SEALED	54201414N	N/A	N/A	54201418	N/A	N/A
		SEALED	54201414	(C) 04687928	YNA 7283-4749	54201418	(C) 04707243	N/A
C	DK GREY	UNSEALED	54201402N	N/A	N/A	DIRECT CONNECT APPLICATION INDEX C		
		UNSEALED	54201402	(C) 04687931	YNA 7283-4648-10	DIRECT CONNECT APPLICATION INDEX C		
		SEALED	54201413N	N/A	N/A	54201417	N/A	N/A
		SEALED	F371010	N/A	N/A	JOHN DEERE LITTLE FUSE LOAD CENTER		
		SEALED	△ F366900	N/A	N/A	DIRECT CONNECT APPLICATION INDEX C		
		SEALED	54201413	(C) 04687927	YNA 7283-4748-10	54201417	(C) 04707241	N/A
B	LT GREY	UNSEALED	54201453N	N/A	N/A	DIRECT CONNECT APPLICATION INDEX B		
		UNSEALED	54201453	N/A	YNA 7283-4747-40	DIRECT CONNECT APPLICATION INDEX B		
		UNSEALED	54201401N	N/A	N/A	54201405	N/A	N/A
		UNSEALED	54201401	(C) 04687930	YNA 7283-4647-40	54201405	(C) 04687936	N/A
		SEALED	54201412N	N/A	N/A	54201416	N/A	N/A
		SEALED	F371010	N/A	N/A	JOHN DEERE LITTLE FUSE LOAD CENTER		
		SEALED	△ F266900	N/A	N/A	DIRECT CONNECT APPLICATION INDEX B		
		SEALED	54201412	(C) 04687926	YNA 7283-4645-40	54201416	(C) 04687934	N/A
A	BLACK	UNSEALED	54201442N	N/A	N/A	54201404	N/A	N/A
		UNSEALED	54201442	(C) 04868197AA	N/A	54201404	(C) 04687935	N/A
		UNSEALED	54201400N	N/A	N/A	54201404	N/A	N/A
		UNSEALED	54201400	(C) 04687929	YNA 7283-4644-30	54201404	(C) 04687935	N/A
		SEALED	54201411	(C) 04687925	YNA 7283-4641-30	54201415	(C) 04867933	N/A
		SEALED	54201419N	(C) *04707442	YNA 7283-4746-30	54201415	(C) 04867933	N/A
		SEALED	54201443	(C) *04759591AA	YNA 7283-4341-30	54201415	(C) 04867933	JD/LF LOAD CENTER
		SEALED	54201445N	(C) 04707405	N/A	54201415	(C) 04867933	N/A
		SEALED	△ F166900	N/A	N/A	DIRECT CONNECT APPLICATION INDEX A		
		SEALED	54201456N	N/A	(GM) 15125222	N/A	N/A	(GM) 15125233

FCI - FRAMATOME CONNECTORS INTERLOCK
YNA - YAZAKI NORTH AMERICA
(C) - CHRYSLER (GM)- GENERAL MOTORS
(JD)- JOHN DEERE (LF)- LITTLE FUSE

ASSEMBLY PART NUMBERS

FCI P/N'S (CUSTOMER P/N'S)	OTHER CUST P/N'S	UNSEALED W/O CPA	UNSEALED W/CPA	SEALED W/CPA	SEALED W/O CPA
54201453N	N/A				
54201452N	N/A				
54201442N	N/A				
54201400N	N/A				
54201401N	N/A				
54201402N	N/A				
54201403N	N/A				
54201452 (N/A)	YNA 7283-4747-40				
54201452 (C) 04868345AA	N/A				
54201442 (C) 04868197AA	N/A				
54201400 (C) 04687929	YNA 7283-4644-30				
54201401 (C) 04687930	YNA 7283-4647-40				
54201402 (C) 04687931	YNA 7283-4648-10				
54201403 (C) 04687932	YNA 7283-4649				
54201467 (N/A)					
54201411 (C) 04687925	YNA 7283-4641-30				
△ F166900 (N/A)					
54201412 (C) 04687926	YNA 7283-4645-40				
△ F266900 (N/A)					
54201413 (C) 04687927	YNA 7283-4748-10				
△ F366900 (N/A)					
54201414 (C) 04687928	YNA 7283-4749				
*54201443 (C) *04759591AA	YNA 7283-4341-30				
*F371010 (N/A)					
*54201419N (C) *04707442	YNA 7283-4746-30				
54201445N (C) 04707405	(GM) 15125232				
54201456N (N/A)					
54201412N (N/A)					
54201413N (N/A)					
54201414N (N/A)					

ITEM	FCI P/N	CHRYSLER P/N	PART NAME	MATERIAL
1A	54201432	(C) 04687804	SEALED, INDEX A; BLACK	PA66 GF35
1A	54201433	(C) 04687954	SEALED, INDEX B; LT GRY	PA66 GF35
1A	54201434	(C) 04687955	SEALED, INDEX C; DK GRY	PA66 GF35
1A	54201435	(C) 04687956	SEALED, INDEX D; NATURAL	PA66 GF35
1B	54201420	(C) 04707291	UNSEALED, INDEX A; BLK W/FINGER GRIP	PA66 GF35
1B	54201421	(C) 04707292	UNSEALED, INDEX B; LT GRY W/FINGER GRIP	PA66 GF35
1B	54201422	(C) 04707293	UNSEALED, INDEX C; DK GRY W/FINGER GRIP	PA66 GF35
1B	54201423	(C) 04707294	UNSEALED, INDEX D; NATURAL W/FINGER GRIP	PA66 GF35
1C	54201451	N/A	UNSEALED, INDEX D; LT GRN W/O FINGER GRIP	PA66 GF35
1C	54201466	N/A	UNSEALED, INDEX D; NATURAL W/O FINGER GRIP	PA66 GF35
2	54201448	(C) 04687973	WEDGE-FEMALE;ROYAL BLUE	PA66 GF36
3	54201449	(C) 04687972	RING SEAL;RED	SILICONE
4A	54201450	(C) 04687952	END SEAL;LIGHT BLUE (INSULATION RANGE Ø1.70 - Ø3.35)	SILICONE
4B	54201457	(**93008014)	END SEAL;BRT YELLOW (WITHOUT HOLES)	SILICONE
4C	C855900	N/A	END SEAL; WHITE (INSULATION RANGE Ø1.90 - Ø3.70)	SILICONE
5	54201428	(C) 04687948	RETAINER;BLACK	PA66 GF35
6	54200003	(C) 04687739	CPA LATCH;RED	PA66 GF35

CONNECTOR ASSEMBLY TEMPERATURE CLASS PER SAE/USCAR-2 REV 5

PART CHANGE LEVEL (PCL)

20 TO 10 AWG (Ø1.50 TO Ø4.09) — SEE NOTES — PLUG — SEE NOTES

** INTERLOCK P/N
△ INDICATES P/N AVAILABLE THROUGH TTI

FCI	52772 OR 52772H	SEE CHART	
VENDOR	VENDOR CODE	P/N	

11802	02-08-11	W	ALL	ASSEMBLY P/N'S F271010, F371010 ADDED. NOTES AND CHARTS UPDATED. INSULATION RANGE ADDED AND REVISED	SR SSS SSS
11748	11-22-10	V	ALL	ASSEMBLY P/N'S F166900, F266900, F366900 AND END SEAL P/N C855900 ADDED. NOTES AND CHARTS UPDATED. BREAK LINE ADDED TO PERMISSIBLE THIN LINE BREAK ON CAVITY WALLS.	SR SSS SSS
10368	05-14-08	U	D16 N14	P/N 54201472 ADDED FOR LIGHT GRAY INSULATOR AND CPA SUB-ASSEMBLY.#5.8ø±0.30 WAS ø6.25.	RA SSS SSS
10013	11-12-07	T1	N21 P19	OVERALL LENGTH & WIDTH DIMS UPDATED TO MATCH WITH MFG DWG. DCA CHANGED TO CHRYSLER USE W/2.8MM APEX TERM ADDED IN NOTES. REDRAWN ON NEW FCI TITLE BLOCK SEE REV "S1" FOR PREVIOUS CHANGES.	RA SSS SSS
9710	07-31-07	T	ALL		DRK SSS SSS
ECN-NUMBER	DATE W-D-Y	REVISION	ZONE	CHANGE DESCRIPTION	DRAWN BY CHK. BY APPR. BY

PRODUCT SPEC. APEX 2.8MM	PACKAGING SPEC. -	APPLICATION SPEC. -	
TOLERANCES ±.MXD ±0.25 ±.MXX ±0.10 ANGULAR ±2°	MATERIAL SEE CHART	SURFACE FINISH - -	
CONFORMS TO H59008, H29001, 536014	COLOR - -		3RD ANGLE
DO NOT SCALE DRAWING	TOOL NO. A-040	FCI Loc. Code NA	CAD SYSTEM pro / eng
DATE	NAME	TITLE CHART-ASSEMBLY	DIMENSION IN MILLIMETERS
DRAWN BY 07-21-07	RAJKUMAR	14-WAY FEMALE SEALED & UNSEALED 2.80MM APEX CONNECTOR SYSTEM	DRAWING NUMBER H59008
CHECKED BY 07-21-07	SUCHA SIAN		SHEET 1 OF 1
APPROVED BY 07-21-07	SUCHA SIAN	USER NO. WT225/6243	CAT. NO. -
			FILE NAME H59008

SCALE 2:1

Компания «ЭлектроПласт» предлагает заключение долгосрочных отношений при поставках импортных электронных компонентов на взаимовыгодных условиях!

Наши преимущества:

- Оперативные поставки широкого спектра электронных компонентов отечественного и импортного производства напрямую от производителей и с крупнейших мировых складов;
- Поставка более 17-ти миллионов наименований электронных компонентов;
- Поставка сложных, дефицитных, либо снятых с производства позиций;
- Оперативные сроки поставки под заказ (от 5 рабочих дней);
- Экспресс доставка в любую точку России;
- Техническая поддержка проекта, помощь в подборе аналогов, поставка прототипов;
- Система менеджмента качества сертифицирована по Международному стандарту ISO 9001;
- Лицензия ФСБ на осуществление работ с использованием сведений, составляющих государственную тайну;
- Поставка специализированных компонентов (Xilinx, Altera, Analog Devices, Intersil, Interpoint, Microsemi, Aeroflex, Peregrine, Syfer, Eurofarad, Texas Instrument, Miteq, Cobham, E2V, MA-COM, Hittite, Mini-Circuits,General Dynamics и др.);

Помимо этого, одним из направлений компании «ЭлектроПласт» является направление «Источники питания». Мы предлагаем Вам помощь Конструкторского отдела:

- Подбор оптимального решения, техническое обоснование при выборе компонента;
- Подбор аналогов;
- Консультации по применению компонента;
- Поставка образцов и прототипов;
- Техническая поддержка проекта;
- Защита от снятия компонента с производства.

Как с нами связаться

Телефон: 8 (812) 309 58 32 (многоканальный)
Факс: 8 (812) 320-02-42
Электронная почта: org@eplast1.ru
Адрес: 198099, г. Санкт-Петербург, ул. Калинина, дом 2, корпус 4, литера А.