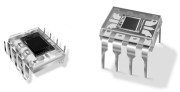

SBBS002A – JANUARY 1994 – REVISED OCTOBER 2003

# MONOLITHIC PHOTODIODE AND SINGLE-SUPPLY TRANSIMPEDANCE AMPLIFIER

## FEATURES

- SINGLE SUPPLY: +2.7 to +36V
- PHOTODIODE SIZE: 0.090 x 0.090 inch
- INTERNAL 1MΩ FEEDBACK RESISTOR
- HIGH RESPONSIVITY: 0.45A/W (650nm)
- BANDWIDTH: 14kHz at $R_F$ = 1MΩ
- LOW QUIESCENT CURRENT: 120µA
- AVAILABLE IN 8-PIN DIP AND 8-LEAD SURFACE-MOUNT PACKAGES

## APPLICATIONS

- MEDICAL INSTRUMENTATION
- LABORATORY INSTRUMENTATION
- POSITION AND PROXIMITY SENSORS
- PHOTOGRAPHIC ANALYZERS
- BARCODE SCANNERS
- SMOKE DETECTORS
- CURRENCY CHANGERS

## DESCRIPTION

The OPT101 is a monolithic photodiode with on-chip transimpedance amplifier. Output voltage increases linearly with light intensity. The amplifier is designed for single or dual power-supply operation, making it ideal for battery-operated equipment.

The integrated combination of photodiode and transimpedance amplifier on a single chip eliminates the problems commonly encountered in discrete designs such as leakage current errors, noise pick-up, and gain peaking due to stray capacitance. The 0.09 x 0.09 inch photodiode is operated in the photoconductive mode for excellent linearity and low dark current.

The OPT101 operates from +2.7V to +36V supplies and quiescent current is only 120µA. It is available in clear plastic 8-pin DIP, and J-formed DIP for surface mounting. Temperature range is 0°C to +70°C.

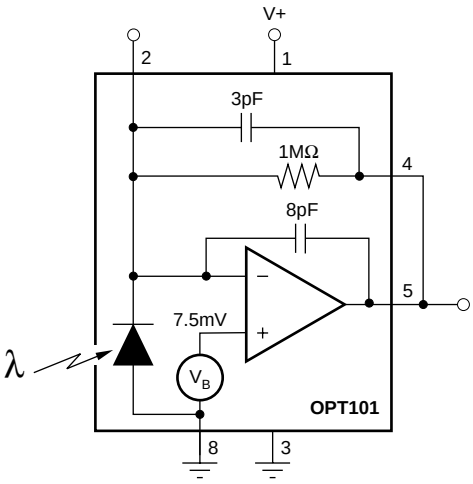


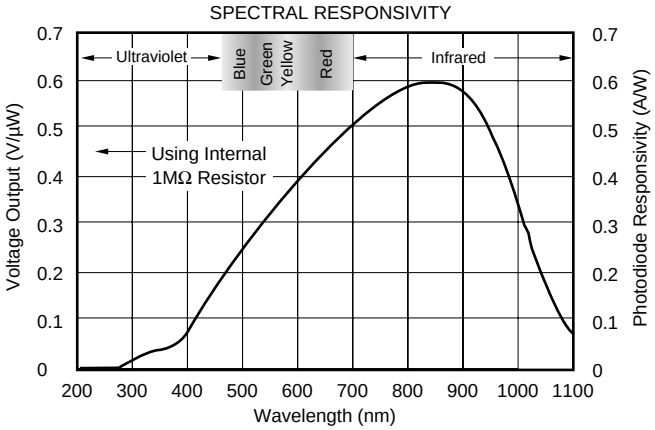


Please be aware that an important notice concerning availability, standard warranty, and use in critical applications of Texas Instruments semiconductor products and disclaimers thereto appears at the end of this data sheet.

All trademarks are the property of their respective owners.

PRODUCTION DATA information is current as of publication date. Products conform to specifications per the terms of Texas Instruments standard warranty. Production processing does not necessarily include testing of all parameters.

Copyright © 1994-2003, Texas Instruments Incorporated

# SPECIFICATIONS

At $T_A$ = +25°C, $V_S$ = +2.7V to +36V, λ = 650nm, internal 1MΩ feedback resistor, and $R_L$ = 10kΩ, unless otherwise noted.

| PARAMETER | CONDITIONS | OPT101P MIN | OPT101P TYP | OPT101P MAX | UNITS |
|---|---|---|---|---|---|
| **RESPONSIVITY** | | | | | |
| Photodiode Current | 650nm | | 0.45 | | A/W |
| Voltage Output | 650nm | | 0.45 | | V/µW |
| vs Temperature | | | 100 | | ppm/°C |
| Unit to Unit Variation | 650nm | | ±5 | | % |
| Nonlinearity(1) | FS Output = 24V | | ±0.01 | | % of FS |
| Photodiode Area | (0.090 x 0.090in) | | 0.008 | | $in^2$ |
| | (2.29 x 2.29mm) | | 5.2 | | $mm^2$ |
| **DARK ERRORS, RTO(2)** | | | | | |
| Offset Voltage, Output | | +5 | +7.5 | +10 | mV |
| vs Temperature | | | ±10 | | µV/°C |
| vs Power Supply | $V_S$ = +2.7V to +36V | | 10 | 100 | µV/V |
| Voltage Noise, Dark, $f_B$ = 0.1Hz to 20kHz | $V_S$ = +15V, $V_{PIN3}$ = –15V | | 300 | | µVrms |
| **TRANSIMPEDANCE GAIN** | | | | | |
| Resistor | | | 1 | | MΩ |
| Tolerance, P | | | ±0.5 | ±2 | % |
| W | | | ±0.5 | | % |
| vs Temperature | | | ±50 | | ppm/°C |
| **FREQUENCY RESPONSE** | | | | | |
| Bandwidth | $V_{OUT}$ = 10Vp-p | | 14 | | kHz |
| Rise Fall Time, 10% to 90% | $V_{OUT}$ = 10V Step | | 28 | | µs |
| Settling Time, 0.05% | $V_{OUT}$ = 10V Step | | 160 | | µs |
| 0.1% | | | 80 | | µs |
| 1% | | | 70 | | µs |
| Overload Recovery | 100%, Return to Linear Operation | | 50 | | µs |
| **OUTPUT** | | | | | |
| Voltage Output, High | | ($V_S$) – 1.3 | ($V_S$) – 1.15 | | V |
| Capacitive Load, Stable Operation | | | 10 | | nF |
| Short-Circuit Current | $V_S$ = 36V | | 15 | | mA |
| **POWER SUPPLY** | | | | | |
| Operating Voltage Range | | +2.7 | | +36 | V |
| Quiescent Current | Dark, $V_{PIN3}$ = 0V | | 120 | 240 | µA |
| | $R_L$ = ∞, $V_{OUT}$ = 10V | | 220 | | µA |
| **TEMPERATURE RANGE** | | | | | |
| Specification | | 0 | | +70 | °C |
| Operating | | 0 | | +70 | °C |
| Storage | | –25 | | +85 | °C |
| Thermal Resistance, $\theta_{JA}$ | | | 100 | | °C/W |

NOTES: (1) Deviation in percent of full scale from best-fit straight line. (2) Referred to Output. Includes all error sources.

# PHOTODIODE SPECIFICATIONS

$T_A$ = +25°C, $V_S$ = +2.7V to +36V unless otherwise noted.

| PARAMETER | CONDITIONS | Photodiode of OPT101P MIN | Photodiode of OPT101P TYP | Photodiode of OPT101P MAX | UNITS |
|---|---|---|---|---|---|
| Photodiode Area | (0.090 x 0.090in) | | 0.008 | | $in^2$ |
| | (2.29 x 2.29mm) | | 5.2 | | $mm^2$ |
| Current Responsivity | 650nm | | 0.45 | | A/W |
| | 650nm | | 865 | | µA/W/$cm^2$ |
| Dark Current | $V_{DIODE}$ = 7.5mV | | 2.5 | | pA |
| vs Temperature | | | Doubles every 7°C | | |
| Capacitance | | | 1200 | | pF |

# OP AMP SPECIFICATIONS

At $T_A$ = +25°C, $V_S$ = +2.7V to +36V, λ = 650nm, internal 1MΩ feedback resistor, and $R_L$ = 10kΩ, unless otherwise noted.

| PARAMETER | CONDITIONS | OPT101 Op Amp[1] MIN | TYP | MAX | UNITS |
|---|---|---|---|---|---|
| **INPUT** | | | | | |
| Offset Voltage | | | ±0.5 | | mV |
| vs Temperature | | | ±2.5 | | µV/°C |
| vs Power Supply | | | 10 | | µV/V |
| Input Bias Current | (–) Input | | 165 | | pA |
| vs Temperature | (–) Input | | Doubles every 10°C | | |
| Input Impedance | | | | | |
| Differential | | | 400 \|\| 5 | | MΩ \|\| pF |
| Common-Mode | | | 250 \|\| 35 | | GΩ \|\| pF |
| Common-Mode Input Voltage Range | Linear Operation | | 0 to [($V_S$) – 1] | | V |
| Common-Mode Rejection | | | 90 | | dB |
| **OPEN-LOOP GAIN** | | | | | |
| Open-loop Voltage Gain | | | 90 | | dB |
| **FREQUENCY RESPONSE** | | | | | |
| Gain-Bandwidth Product[2] | | | 2 | | MHz |
| Slew Rate | | | 1 | | V/µs |
| Settling Time 1% | | | 5.8 | | µs |
| 0.1% | | | 7.7 | | µs |
| 0.05% | | | 8.0 | | µs |
| **OUTPUT** | | | | | |
| Voltage Output, High | | ($V_S$) – 1.3 | ($V_S$) – 1.15 | | V |
| Short-Circuit Current | $V_S$ = +36V | | 15 | | mA |
| **POWER SUPPLY** | | | | | |
| Operating Voltage Range | | +2.7 | | +36 | V |
| Quiescent Current | Dark, $V_{PIN3}$ = 0V | | 120 | 240 | µA |
| | $R_L$ = ∞, $V_{OUT}$ = 10V | | 220 | | µA |

NOTES: (1) Op amp specifications provided for information and comparison only. (2) Stable gains ≥ 10V/V.

## PACKAGE/ORDERING INFORMATION[1]

| PRODUCT | PACKAGE-LEAD | PACKAGE DESIGNATOR | SPECIFIED TEMPERATURE RANGE | PACKAGE MARKING | ORDERING NUMBER | TRANSPORT MEDIA, QUANTITY |
|---|---|---|---|---|---|---|
| OPT101P | DIP-8 | NTC | –25°C to +85°C | OPT101 | OPT101P | Rail, 50 |
| OPT101P-J | DIP-8, Surface Mount[2] | DTL | –25°C to +85°C | OPT101 | OPT101P-J | Rail, 50 |

NOTES: (1) For the most current package and ordering information, see the Package Option Addendum at the end of this data sheet. (2) 8-pin DIP with J-formed leads for surface mounting.

## PIN CONFIGURATIONS

**Top View** **DIP**

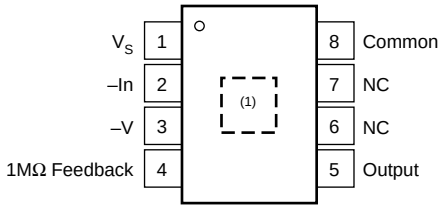


NOTE: (1) Photodiode location.

## ABSOLUTE MAXIMUM RATINGS[1]

| | |
|---|---|
| Supply Voltage ($V_S$ to *"Common"* or pin 3) | 0 to +36V |
| Output Short-Circuit (to ground) | Continuous |
| Operating Temperature | –25°C to +85°C |
| Storage Temperature | –25°C to +85°C |
| Junction Temperature | +85°C |
| Lead Temperature (soldering, 10s) (Vapor-Phase Soldering Not Recommended) | +300°C |

NOTE: (1) Stresses above these ratings may cause permanent damage. Exposure to absolute maximum conditions for extended periods may degrade device reliability. These are stress ratings only, and functional operation of the device at these or any other conditions beyond those specified is not implied.

## ELECTROSTATIC DISCHARGE SENSITIVITY

This integrated circuit can be damaged by ESD. Texas Instruments recommends that all integrated circuits be handled with appropriate precautions. Failure to observe proper handling and installation procedures can cause damage.

ESD damage can range from subtle performance degradation to complete device failure. Precision integrated circuits may be more susceptible to damage because very small parametric changes could cause the device not to meet its published specifications.

## MOISTURE SENSITIVITY AND SOLDERING

Clear plastic does not contain the structural-enhancing fillers used in black plastic molding compound. As a result, clear plastic is more sensitive to environmental stress than black plastic. This can cause difficulties if devices have been stored in high humidity prior to soldering. The rapid heating during soldering can stress wire bonds and cause failures. Prior to soldering, it is recommended that plastic devices be baked-out at +85°C for 24 hours.

The fire-retardant fillers used in black plastic are not compatible with clear molding compound. The OPT101 plastic packages cannot meet flammability test, UL-94.

# TYPICAL PERFORMANCE CURVES

At $T_A$ = +25°C, $V_S$ = +2.7V to +36V, λ = 650nm, internal 1MΩ feedback resistor, and $R_L$ = 10kΩ, unless otherwise noted.

NORMALIZED SPECTRAL RESPONSIVITY

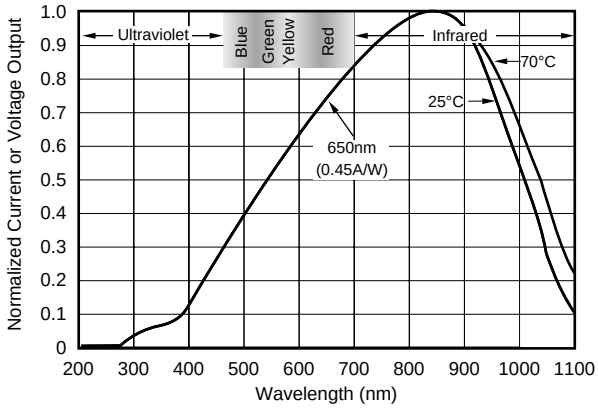


VOLTAGE RESPONSIVITY vs RADIANT POWER

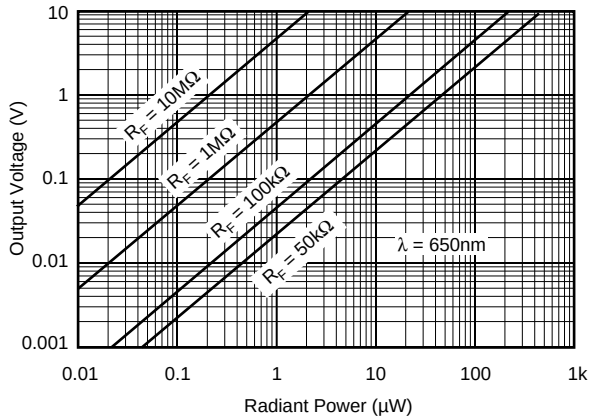


VOLTAGE RESPONSIVITY vs IRRADIANCE

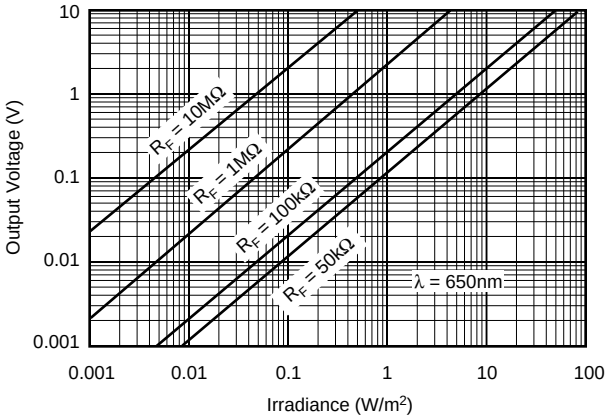


VOLTAGE RESPONSIVITY vs FREQUENCY

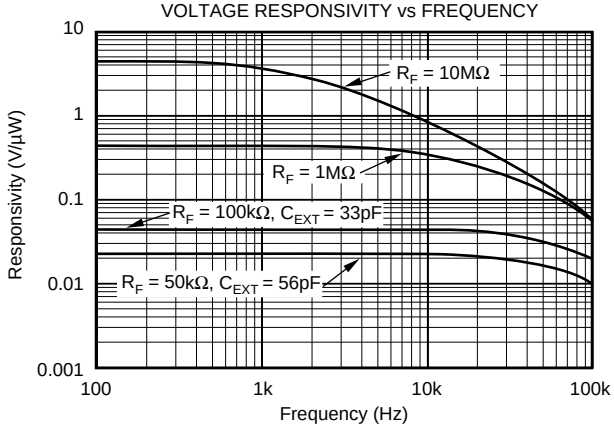


RESPONSE vs INCIDENT ANGLE

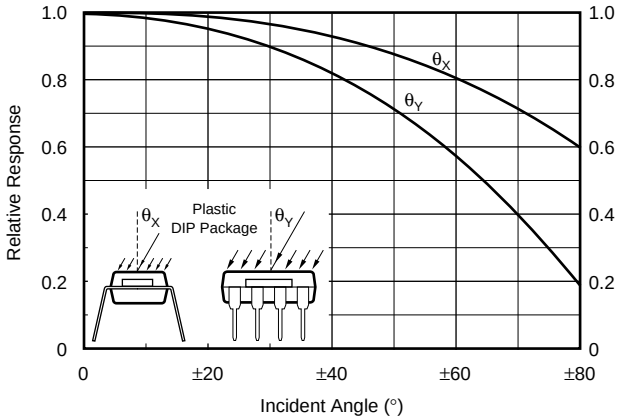


DARK $V_{OUT}$ vs TEMPERATURE

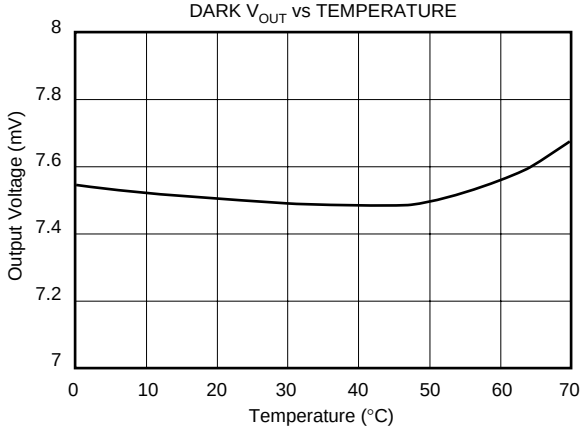

# TYPICAL PERFORMANCE CURVES (Cont.)

At $T_A$ = +25°C, $V_S$ = +2.7V to +36V, λ = 650nm, internal 1MΩ feedback resistor, and $R_L$ = 10kΩ, unless otherwise noted.

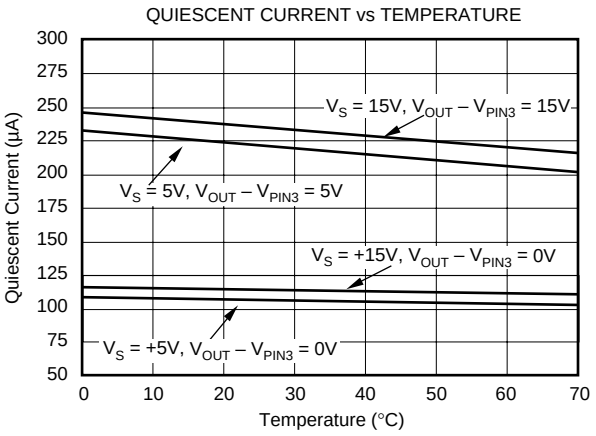


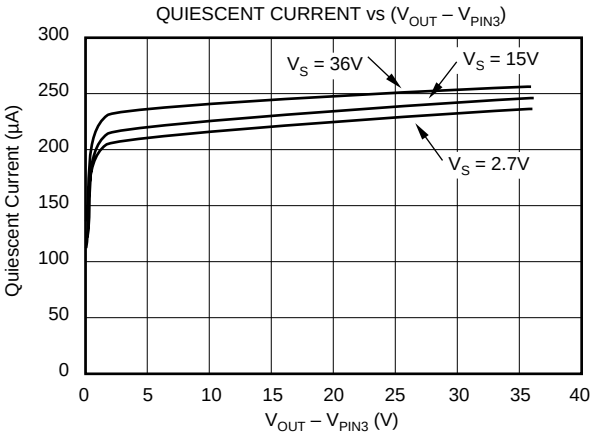


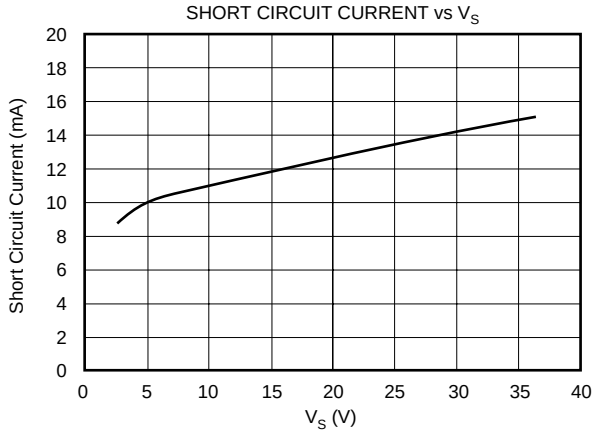


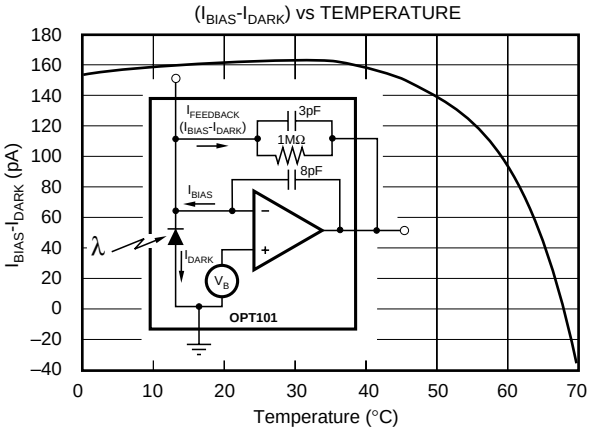


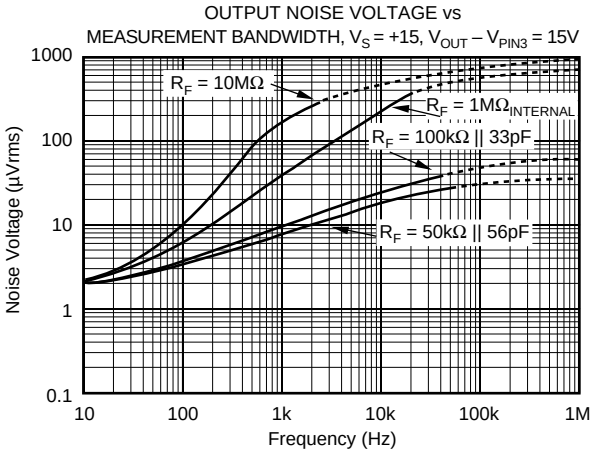


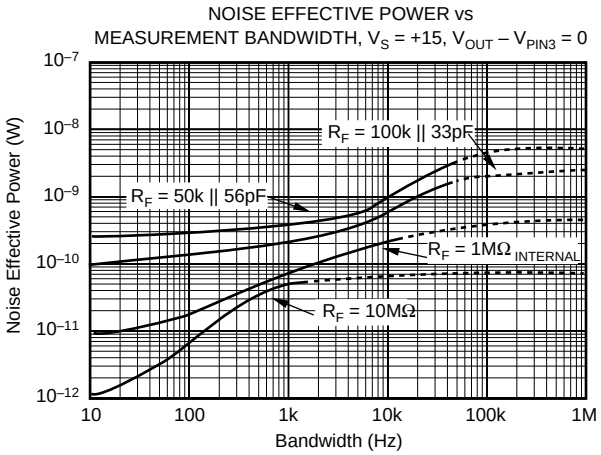

# TYPICAL PERFORMANCE CURVES (Cont.)

At $T_A$ = +25°C, $V_S$ = +2.7V to +36V, $\lambda$ = 650nm, internal 1MΩ feedback resistor, and $R_L$ = 10kΩ, unless otherwise noted.

SMALL SIGNAL RESPONSE

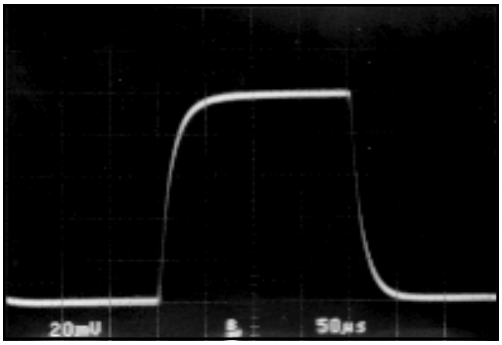


LARGE SIGNAL RESPONSE

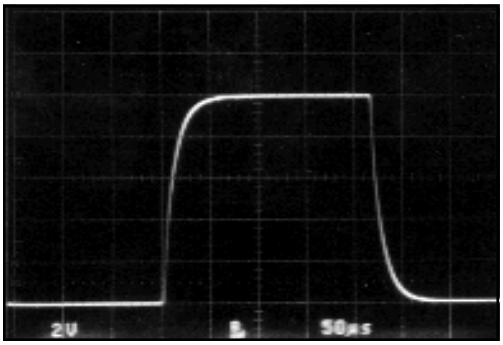


SMALL SIGNAL RESPONSE ($C_{LOAD}$ = 10,000 pF)
(Pin 3 = 0V)

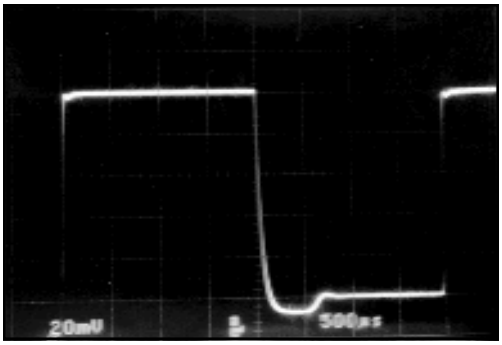


SMALL SIGNAL RESPONSE ($C_{LOAD}$ = 10,000 pF)
(Pin 3 = –15V)

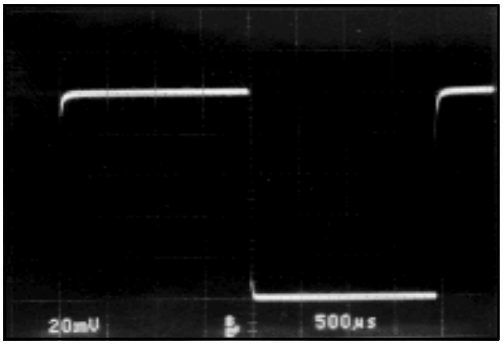

# APPLICATIONS INFORMATION

Figure 1 shows the basic connections required to operate the OPT101. Applications with high-impedance power supplies may require decoupling capacitors located close to the device pins as shown. Output is 7.5mV dc with no light and increases with increasing illumination.

Photodiode current, $I_D$, is proportional to the radiant power, or flux, (in watts) falling on the photodiode. At a wavelength of 650nm (visible red) the photodiode Responsivity, $R_I$, is approximately 0.45A/W. Responsivity at other wavelengths is shown in the typical performance curve “Responsivity vs Wavelength.”

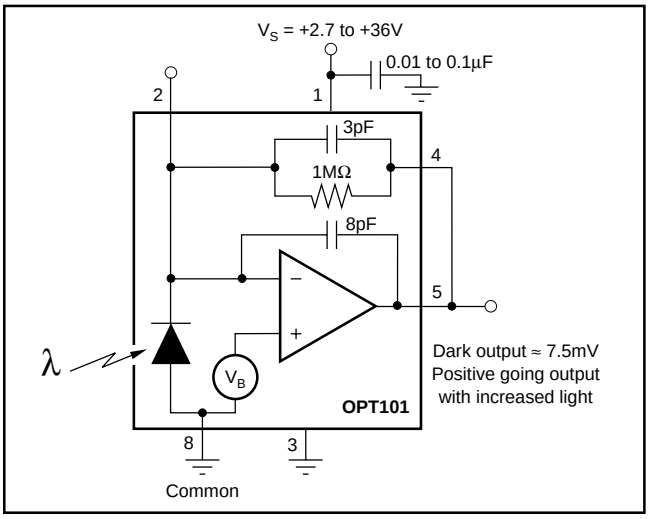


FIGURE 1. Basic Circuit Connections.

The typical performance curve “Output Voltage vs Radiant Power” shows the response throughout a wide range of radiant power. The response curve “Output Voltage vs Irradiance” is based on the photodiode area of 5.2mm$^2$.

The OPT101’s voltage output is the product of the photodiode current times the feedback resistor, ($I_D R_F$), plus a pedestal voltage, $V_B$, of approximately 7.5mV introduced for single supply operation. The internal feedback resistor is laser trimmed to 1MΩ. Using this resistor, the output voltage responsivity, $R_V$, is approximately 0.45V/µW at 650nm wavelength. Figure 1 shows the basic circuit connections for the OPT101 operating with a single power supply and using the internal 1MΩ feedback resistor for a response of 0.45V/µW at 650nm. Pin 3 is connected to common in this configuration.

## CAPACITIVE LOADING

The OPT101 is capable of driving load capacitances of 10nF without instability. However, dynamic performance with capacitive loads can be improved by applying a negative bias voltage to Pin 3 (shown in Figure 2). This negative power supply voltage allows the output to go negative in response to the reactive effect of a capacitive load. An internal JFET connected between pin 5 (output) and pin 3 allows the output to sink current. This current sink capability can also be useful when driving the capacitive inputs of some analog-to-digital converters which require the signal source to sink currents up to approximately 100µA. The benefits of this current sink are shown in the typical performance curves “Small Signal Response ($C_{LOAD}$ = 10,000pF)” which compare operation with pin 3 grounded and connected to –15V.

Due to the architecture of this output stage current sink, there is a slight increase in operating current when there is a voltage between pin 3 and the output. Depending on the magnitude of this voltage, the quiescent current will increase by approximately 100µA as shown in the typical performance curve "Quiescent Current vs ($V_{OUT} – V_{PIN3}$)".

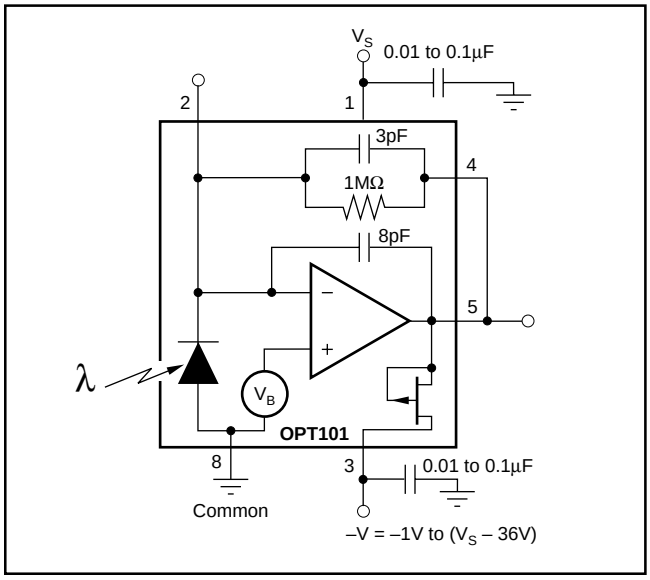


FIGURE 2. Bipolar Power Supply Circuit Connections.

## NOISE PERFORMANCE

Noise performance of the OPT101 is determined by the op amp characteristics, feedback components and photodiode capacitance. The typical performance curve “Output Noise Voltage vs Measurement Bandwidth” shows how the noise varies with $R_F$ and measured bandwidth (0.1Hz to the indicated frequency), when the output voltage minus the voltage on pin 3 is greater than approximately 50mV. Below this level, the output stage is powered down, and the effective bandwidth is decreased. This reduces the noise to approximately 1/3 the nominal noise value of 300µVrms, or 100µVrms. This enables a low level signal to be resolved.

Noise can be reduced by filtering the output with a cutoff frequency equal to the signal bandwidth. This will improve signal-to-noise ratio. Also, output noise increases in proportion to the square root of the feedback resistance, while responsivity increases linearly with feedback resistance. Best signal-to-noise ratio is achieved with large feedback resistance. This comes with the trade-off of decreased bandwidth.

The noise performance of the photodetector is sometimes characterized by *Noise Effective Power* (NEP). This is the radiant power that would produce an output signal equal to the noise level. NEP has the units of radiant power (watts), or Watts/$\sqrt{Hz}$ to convey spectral information about the noise. The typical performance curve “Noise Effective Power” vs Measurement Bandwidth" illustrates the NEP for the OPT101.

## DARK ERRORS

The dark errors in the specification table include all sources. The dominant source of dark output voltage is the "pedestal" voltage applied to the non-inverting input of the op amp. This voltage is introduced to provide linear operation in the absence of light falling on the photodiode. Photodiode dark current is approximately 2.5pA and contributes virtually no offset error at room temperature. The bias current of the op amp's summing junction (– input) is approximately 165pA. The dark current will be subtracted from the amplifier's bias current, and this residual current will flow through the feedback resistor creating an offset. The effects of temperature on this difference current can be seen in the typical performance curve "($I_{BIAS} - I_{DARK}$) vs Temperature." The dark output voltage can be trimmed to zero with the optional circuit shown in Figure 3. A low impedance offset driver (op amp) should be used to drive pin 8 because this node has signal-dependent currents.

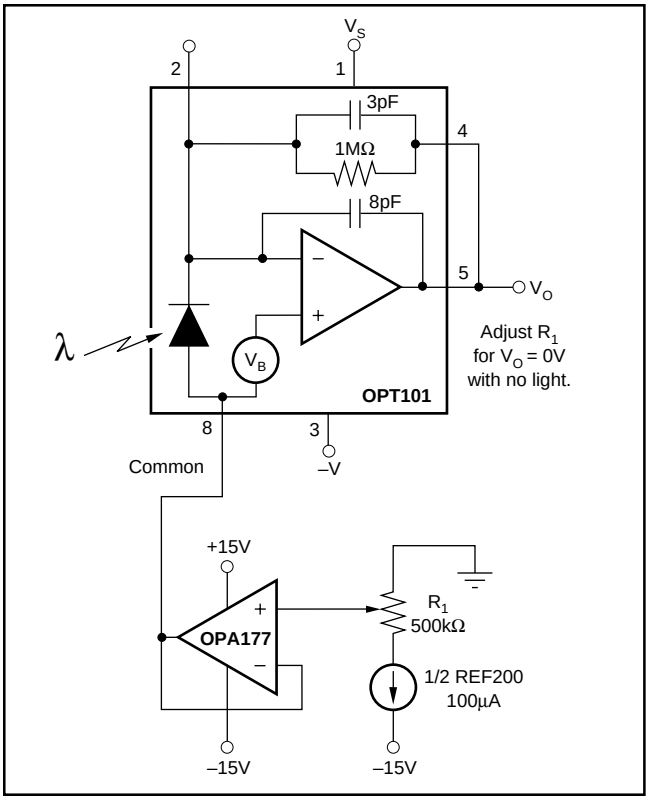


FIGURE 3. Dark Error (Offset) Adjustment Circuit.

## CHANGING RESPONSIVITY

An external resistor, $R_{EXT}$, can be connected to set a different voltage responsivity. To increase the responsivity, this resistor can be placed in series with the internal 1MΩ (Figure 4a), or the external resistor can replace the internal resistor by not connecting pin 4 (Figure 4b). The second configuration also allows the circuit gain to be reduced below $10^6$V/A by using external resistors of less than 1MΩ.

Figure 4 includes tables showing the responsivity and bandwidth. For values of $R_F$ less than 1MΩ, an external capacitor, $C_{EXT}$ should be connected in parallel with $R_F$. This capacitor eliminates gain peaking and prevents instability. The value of $C_{EXT}$ can be determined from the table in Figure 4. Values of $R_F$, other than shown in the table, can be interpolated.

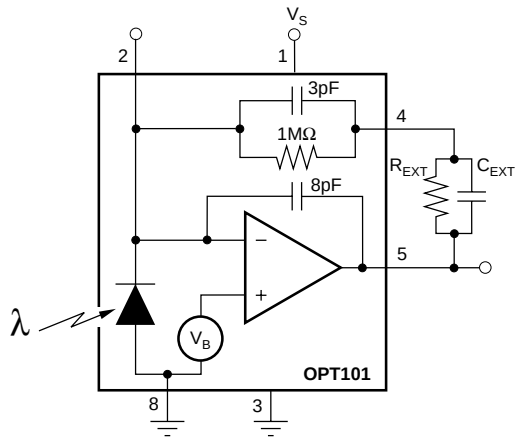


*(a)*-Series $R_{EXT}$

| $R_{EXT}$ (MΩ) | $C_{EXT}$ (pF) | DC Gain (x$10^6$V/A) | Bandwidth (kHz) |
|---|---|---|---|
| 1 | 50 | 2 | 8 |
| 2 | 25 | 3 | 6 |
| 5 | 10 | 6 | 2.5 |
| 10 | 5 | 11 | 1.3 |
| 50 | — | 51 | 0.33 |

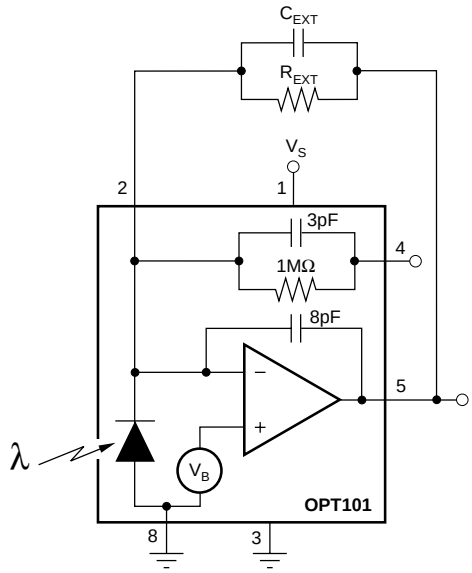


*(b)*-External Feedback

| $R_{EXT}$ (MΩ) | $C_{EXT}$ (pF) | DC Gain (x$10^6$V/A) | Bandwidth (kHz) |
|---|---|---|---|
| 0.05(1) | 56 | 0.05 | 58 |
| 0.1(1) | 33 | 0.1 | 44 |
| 1 | — | 1 | 23 |
| 2 | — | 2 | 9.4 |
| 5 | — | 5 | 3.6 |
| 10 | — | 10 | 1.8 |
| 50 | — | 50 | 0.34 |

Note: (1) May require 1kΩ in series with pin 5 when driving large capacitances.

FIGURE 4. Changing Responsivity with External Resistor.

Applications using a feedback resistor significantly larger than the internal 1MΩ resistor may require special consideration. Input bias current of the op amp and dark current of the photodiode increase significantly at higher temperatures. This increase combined with the higher gain ($R_F$ > 1MΩ) can cause the op amp output to be driven to ground at high temperatures. Such applications may require a positive bias voltage applied to pin 8 to ensure that the op amp output remains in the linear operating region when the photodiode is not exposed to light. Alternatively, a dual power supply can be used. The output may be negative when sensing dark conditions.

## LIGHT SOURCE POSITIONING

The OPT101 is tested with a light source that uniformly illuminates the full area of the integrated circuit, including the op amp. Although IC amplifiers are light-sensitive to some degree, the OPT101 op amp circuitry is designed to minimize this effect. Sensitive junctions are shielded with metal, and the photodiode area is very large relative to the op amp input circuitry.

If your light source is focused to a small area, be sure that it is properly aimed to fall on the photodiode. A narrowly focused beam falling on only the photodiode will provide improved settling times compared to a source that uniformly illuminates the full area of the die. If a narrowly focused light source were to miss the photodiode area and fall only on the op amp circuitry, the OPT101 would not perform properly. The large 0.09" x 0.09" (2.29mm x 2.29mm) photodiode area allows easy positioning of narrowly focused light sources. The photodiode area is easily visible, as it appears very dark compared to the surrounding active circuitry.

The incident angle of the light source also effects the apparent sensitivity in uniform irradiance. For small incident angles, the loss in sensitivity is simply due to the smaller effective light gathering area of the photodiode (proportional to the cosine of the angle). At a greater incident angle, light is diffracted and scattered by the package. These effects are shown in the typical performance curve “Responsivity vs Incident Angle.”

## DYNAMIC RESPONSE

Using the internal 1MΩ resistor, the dynamic response of the photodiode/op amp combination can be modeled as a simple R • C circuit with a –3dB cutoff frequency of approximately 14kHz. The R and C values are 1MΩ and 11pF respectively. By using external resistors, with less than 3pF parasitic capacitance, the frequency response can be improved. An external 1MΩ resistor used in the configuration shown in Figure 4b will create a 23kHz bandwidth with the same $10^6$V/A dc transimpedance gain. This yields a rise time of approximately 15µs (10% to 90%). Dynamic response is not limited by op amp slew rate. This is demonstrated by the dynamic response oscilloscope photographs showing virtually identical large-signal and small-signal response.

Dynamic response will vary with feedback resistor value as shown in the typical performance curve “Responsivity vs Frequency.” Rise time (10% to 90%) will vary according to the –3dB bandwidth produced by a given feedback resistor value:

$$t_r = \frac{0.35}{f_C}$$

where:

$t_r$ is the rise time (10% to 90%)
$f_C$ is the –3dB bandwidth

## LINEARITY PERFORMANCE

The photodiode is operated in the photoconductive mode so the current output of the photodiode is very linear with radiant power throughout a wide range. Nonlinearity remains below approximately 0.05% up to 100µA photodiode current. The photodiode can produce output currents of 1mA or greater with high radiant power, but nonlinearity increases to several percent in this region.

This very linear performance at high radiant power assumes that the full photodiode area is uniformly illuminated. If the light source is focused to a small area of the photodiode, nonlinearity will occur at lower radiant power.

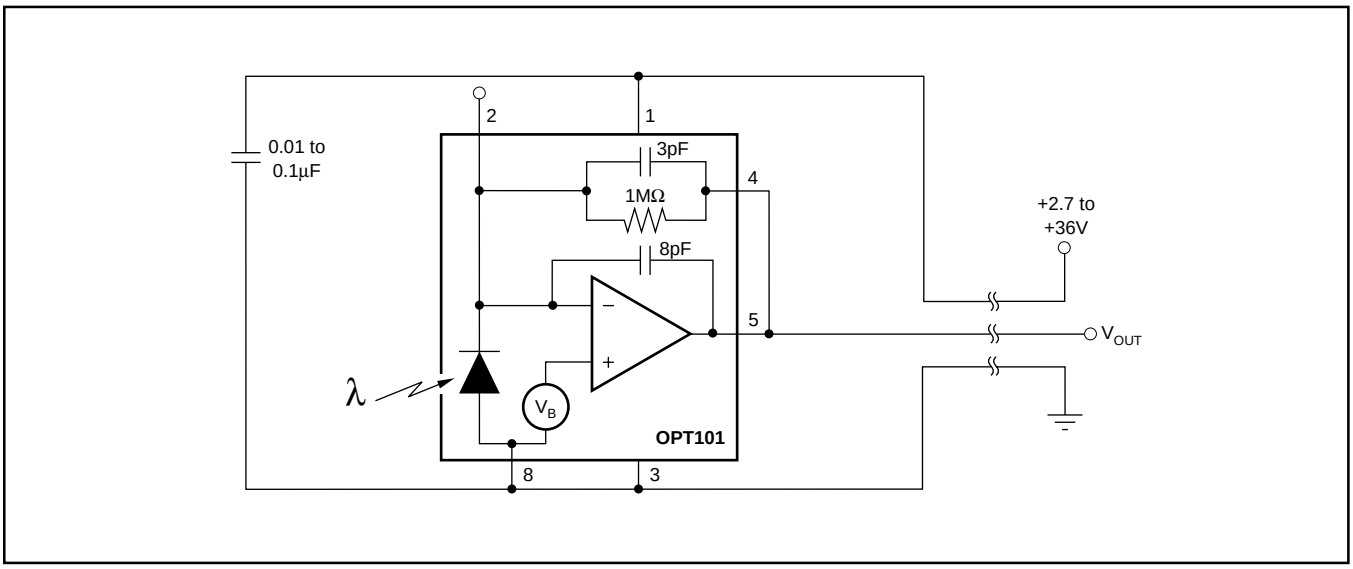


FIGURE 5. Three-Wire Remote Light Measurement.

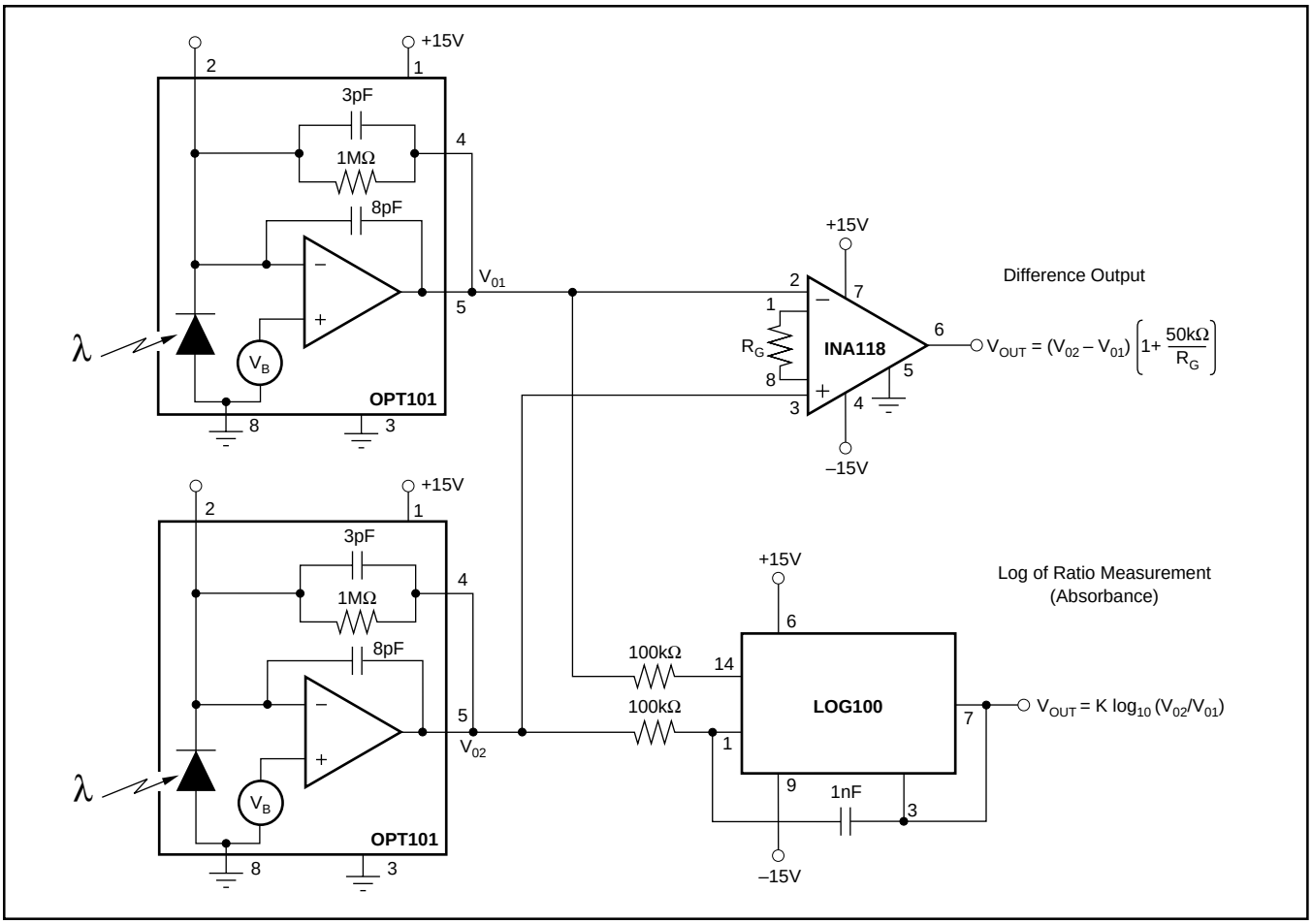


FIGURE 6. Differential Light Measurement.

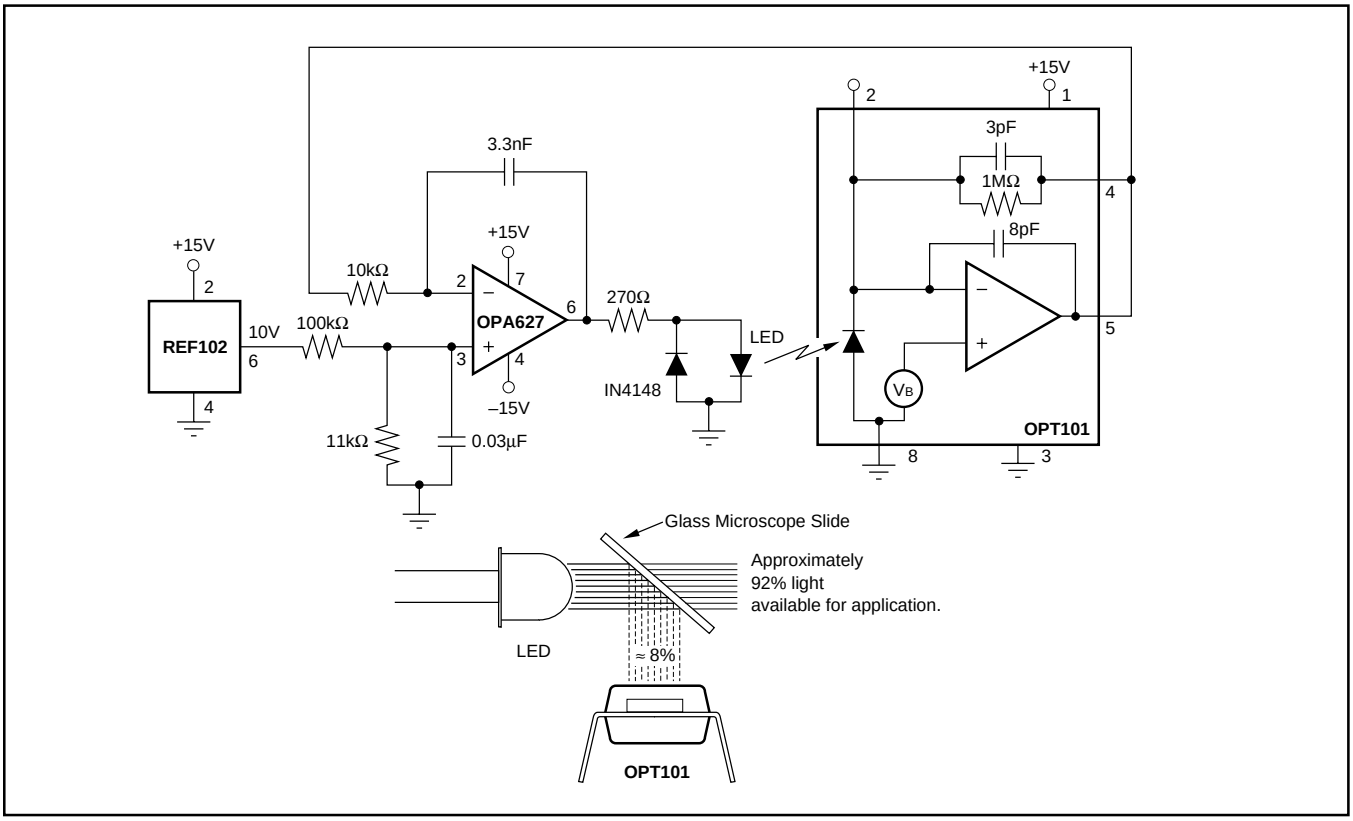


FIGURE 7. LED Output Regulation Circuit.

## PACKAGING INFORMATION

| Orderable Device | Status [1] | Package Type | Package Drawing | Pins | Package Qty | Eco Plan [2] | Lead/Ball Finish | MSL Peak Temp [3] |
|---|---|---|---|---|---|---|---|---|
| OPT101P | ACTIVE | PDIP | NTC | 8 | 50 | Green (RoHS & no Sb/Br) | CU NIPDAU | N / A for Pkg Type |
| OPT101P-J | ACTIVE | SOP | DTL | 8 | 50 | Green (RoHS & no Sb/Br) | CU NIPDAU | Level-4-250C-72 HR |
| OPT101P-JG4 | ACTIVE | SOP | DTL | 8 | 50 | Green (RoHS & no Sb/Br) | CU NIPDAU | Level-4-250C-72 HR |
| OPT101PG4 | ACTIVE | PDIP | NTC | 8 | 50 | Green (RoHS & no Sb/Br) | CU NIPDAU | N / A for Pkg Type |

[1] The marketing status values are defined as follows:
**ACTIVE:** Product device recommended for new designs.
**LIFEBUY:** TI has announced that the device will be discontinued, and a lifetime-buy period is in effect.
**NRND:** Not recommended for new designs. Device is in production to support existing customers, but TI does not recommend using this part in a new design.
**PREVIEW:** Device has been announced but is not in production. Samples may or may not be available.
**OBSOLETE:** TI has discontinued the production of the device.

[2] Eco Plan - The planned eco-friendly classification: Pb-Free (RoHS), Pb-Free (RoHS Exempt), or Green (RoHS & no Sb/Br) - please check http://www.ti.com/productcontent for the latest availability information and additional product content details.
**TBD:** The Pb-Free/Green conversion plan has not been defined.
**Pb-Free (RoHS):** TI's terms "Lead-Free" or "Pb-Free" mean semiconductor products that are compatible with the current RoHS requirements for all 6 substances, including the requirement that lead not exceed 0.1% by weight in homogeneous materials. Where designed to be soldered at high temperatures, TI Pb-Free products are suitable for use in specified lead-free processes.
**Pb-Free (RoHS Exempt):** This component has a RoHS exemption for either 1) lead-based flip-chip solder bumps used between the die and package, or 2) lead-based die adhesive used between the die and leadframe. The component is otherwise considered Pb-Free (RoHS compatible) as defined above.
**Green (RoHS & no Sb/Br):** TI defines "Green" to mean Pb-Free (RoHS compatible), and free of Bromine (Br) and Antimony (Sb) based flame retardants (Br or Sb do not exceed 0.1% by weight in homogeneous material)

[3] MSL, Peak Temp. -- The Moisture Sensitivity Level rating according to the JEDEC industry standard classifications, and peak solder temperature.

**Important Information and Disclaimer:**The information provided on this page represents TI's knowledge and belief as of the date that it is provided. TI bases its knowledge and belief on information provided by third parties, and makes no representation or warranty as to the accuracy of such information. Efforts are underway to better integrate information from third parties. TI has taken and continues to take reasonable steps to provide representative and accurate information but may not have conducted destructive testing or chemical analysis on incoming materials and chemicals. TI and TI suppliers consider certain information to be proprietary, and thus CAS numbers and other limited information may not be available for release.

In no event shall TI's liability arising out of such information exceed the total purchase price of the TI part(s) at issue in this document sold by TI to Customer on an annual basis.

## DTL (R–PDSO–U8) PLASTIC SMALL–OUTLINE

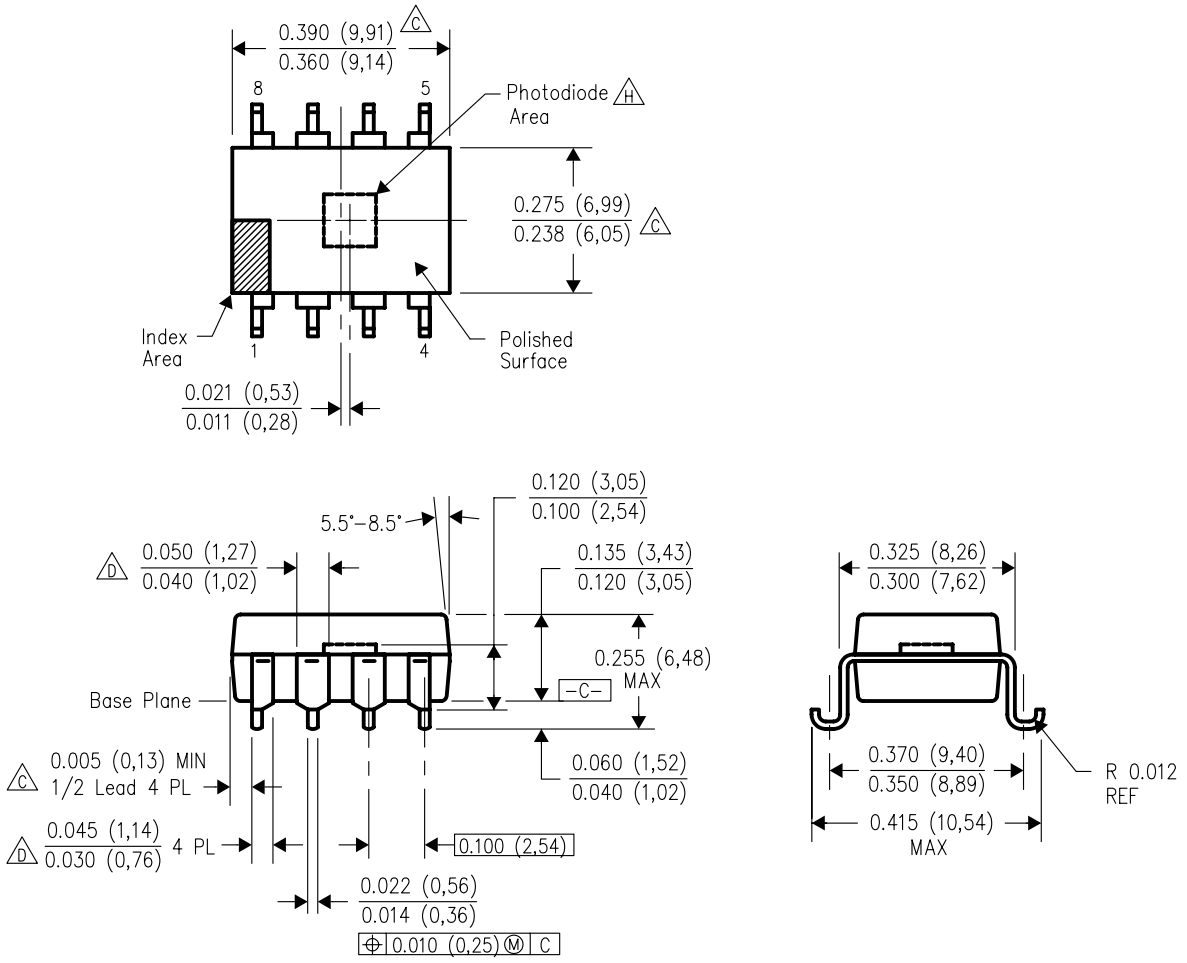


NOTES:
- A. All linear dimensions are in inches (millimeters).
- B. This drawing is subject to change without notice.
- C. Dimensions do not include mold flash or protrusions Mold flash or protrusions shall not exceed 0.010 (0,25).
- D. Maximum dimensions do not include dambar protrusions. Dambar protrusions shall not exceed 0.010 (0,25).
- E. Distance between leads including dambar protrusions to be 0.005 (0,13) minumum.
- F. A visual index feature must be located within the cross–hatched area.
- G. For automatic insertion, any raised irregularity on the top surface (step, mesa, etc.) shall be symmetrical about the lateral and longitudinal package centerlines.
- H. Center of photodiode must be within 0.010 (0,25) of center of photodiode area.

**NTC (R-PDIP-T8)** **PLASTIC DUAL-IN-LINE**

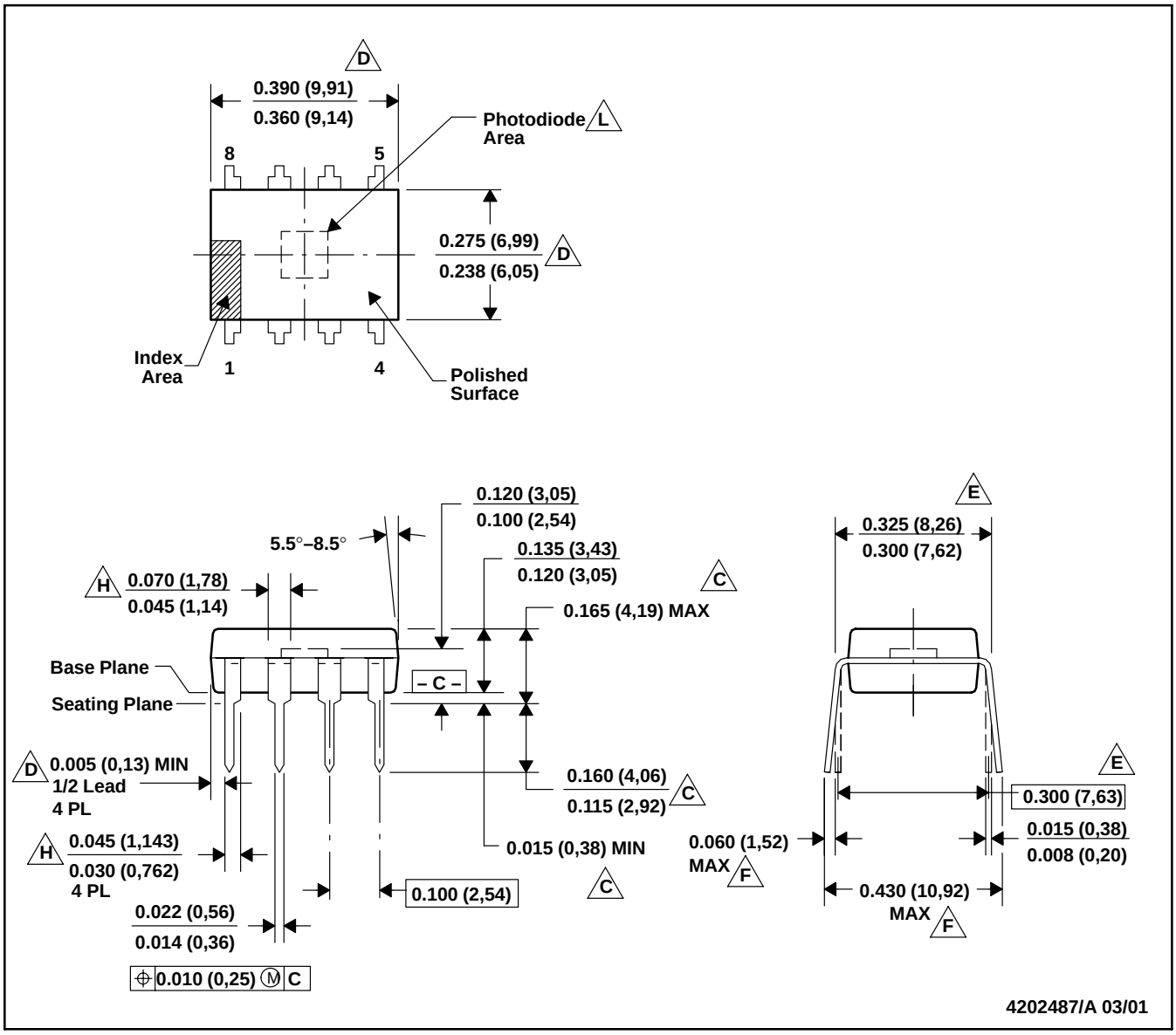


NOTES:
A. All linear dimensions are in inches (millimeters).
B. This drawing is subject to change without notice.
C. Dimensions are measured with the package seated in JEDEC seating plane gauge GS-3.
D. Dimensions do not include mold flash or protrusions. Mold flash or protrusions shall not exceed 0.010 (0,25).
E. Dimensions measured with the leads constrained to be perpendicular to Datum C.
F. Dimensions are measured at the lead tips with the leads unconstrained.
G. Pointed or rounded lead tips are preferred to ease insertion.
H. Maximum dimensions do not include dambar protrusions. Dambar protrusions shall not exceed 0.010 (0,25).
I. Distance between leads including dambar protrusions to be 0.005 (0,13) minumum.
J. A visual index feature must be located within the cross–hatched area.
K. For automatic insertion, any raised irregularity on the top surface (step, mesa, etc.) shall be symmetrical about the lateral and longitudinal package centerlines.
L. Center of photodiode must be within 0.010 (0,25) of center of photodiode area

## IMPORTANT NOTICE

Texas Instruments Incorporated and its subsidiaries (TI) reserve the right to make corrections, modifications, enhancements, improvements, and other changes to its products and services at any time and to discontinue any product or service without notice. Customers should obtain the latest relevant information before placing orders and should verify that such information is current and complete. All products are sold subject to TI's terms and conditions of sale supplied at the time of order acknowledgment.

TI warrants performance of its hardware products to the specifications applicable at the time of sale in accordance with TI's standard warranty. Testing and other quality control techniques are used to the extent TI deems necessary to support this warranty. Except where mandated by government requirements, testing of all parameters of each product is not necessarily performed.

TI assumes no liability for applications assistance or customer product design. Customers are responsible for their products and applications using TI components. To minimize the risks associated with customer products and applications, customers should provide adequate design and operating safeguards.

TI does not warrant or represent that any license, either express or implied, is granted under any TI patent right, copyright, mask work right, or other TI intellectual property right relating to any combination, machine, or process in which TI products or services are used. Information published by TI regarding third-party products or services does not constitute a license from TI to use such products or services or a warranty or endorsement thereof. Use of such information may require a license from a third party under the patents or other intellectual property of the third party, or a license from TI under the patents or other intellectual property of TI.

Reproduction of TI information in TI data books or data sheets is permissible only if reproduction is without alteration and is accompanied by all associated warranties, conditions, limitations, and notices. Reproduction of this information with alteration is an unfair and deceptive business practice. TI is not responsible or liable for such altered documentation. Information of third parties may be subject to additional restrictions.

Resale of TI products or services with statements different from or beyond the parameters stated by TI for that product or service voids all express and any implied warranties for the associated TI product or service and is an unfair and deceptive business practice. TI is not responsible or liable for any such statements.

TI products are not authorized for use in safety-critical applications (such as life support) where a failure of the TI product would reasonably be expected to cause severe personal injury or death, unless officers of the parties have executed an agreement specifically governing such use. Buyers represent that they have all necessary expertise in the safety and regulatory ramifications of their applications, and acknowledge and agree that they are solely responsible for all legal, regulatory and safety-related requirements concerning their products and any use of TI products in such safety-critical applications, notwithstanding any applications-related information or support that may be provided by TI. Further, Buyers must fully indemnify TI and its representatives against any damages arising out of the use of TI products in such safety-critical applications.

TI products are neither designed nor intended for use in military/aerospace applications or environments unless the TI products are specifically designated by TI as military-grade or "enhanced plastic." Only products designated by TI as military-grade meet military specifications. Buyers acknowledge and agree that any such use of TI products which TI has not designated as military-grade is solely at the Buyer's risk, and that they are solely responsible for compliance with all legal and regulatory requirements in connection with such use.

TI products are neither designed nor intended for use in automotive applications or environments unless the specific TI products are designated by TI as compliant with ISO/TS 16949 requirements. Buyers acknowledge and agree that, if they use any non-designated products in automotive applications, TI will not be responsible for any failure to meet such requirements.

Following are URLs where you can obtain information on other Texas Instruments products and application solutions:

| **Products** | | **Applications** | |
|---|---|---|---|
| Amplifiers | amplifier.ti.com | Audio | www.ti.com/audio |
| Data Converters | dataconverter.ti.com | Automotive | www.ti.com/automotive |
| DLP® Products | www.dlp.com | Broadband | www.ti.com/broadband |
| DSP | dsp.ti.com | Digital Control | www.ti.com/digitalcontrol |
| Clocks and Timers | www.ti.com/clocks | Medical | www.ti.com/medical |
| Interface | interface.ti.com | Military | www.ti.com/military |
| Logic | logic.ti.com | Optical Networking | www.ti.com/opticalnetwork |
| Power Mgmt | power.ti.com | Security | www.ti.com/security |
| Microcontrollers | microcontroller.ti.com | Telephony | www.ti.com/telephony |
| RFID | www.ti-rfid.com | Video & Imaging | www.ti.com/video |
| RF/IF and ZigBee® Solutions | www.ti.com/lprf | Wireless | www.ti.com/wireless |

Mailing Address: Texas Instruments, Post Office Box 655303, Dallas, Texas 75265
Copyright © 2009, Texas Instruments Incorporated

Компания «ЭлектроПласт» предлагает заключение долгосрочных отношений при поставках импортных электронных компонентов на взаимовыгодных условиях!

Наши преимущества:

- Оперативные поставки широкого спектра электронных компонентов отечественного и импортного производства напрямую от производителей и с крупнейших мировых складов;
- Поставка более 17-ти миллионов наименований электронных компонентов;
- Поставка сложных, дефицитных, либо снятых с производства позиций;
- Оперативные сроки поставки под заказ (от 5 рабочих дней);
- Экспресс доставка в любую точку России;
- Техническая поддержка проекта, помощь в подборе аналогов, поставка прототипов;
- Система менеджмента качества сертифицирована по Международному стандарту ISO 9001;
- Лицензия ФСБ на осуществление работ с использованием сведений, составляющих государственную тайну;
- Поставка специализированных компонентов (Xilinx, Altera, Analog Devices, Intersil, Interpoint, Microsemi, Aeroflex, Peregrine, Syfer, Eurofarad, Texas Instrument, Miteq, Cobham, E2V, MA-COM, Hittite, Mini-Circuits,General Dynamics и др.);

Помимо этого, одним из направлений компании «ЭлектроПласт» является направление «Источники питания». Мы предлагаем Вам помощь Конструкторского отдела:

- Подбор оптимального решения, техническое обоснование при выборе компонента;
- Подбор аналогов;
- Консультации по применению компонента;
- Поставка образцов и прототипов;
- Техническая поддержка проекта;
- Защита от снятия компонента с производства.

**Как с нами связаться**

**Телефон:** 8 (812) 309 58 32 (многоканальный)
**Факс:** 8 (812) 320-02-42
**Электронная почта:** org@eplast1.ru
**Адрес:** 198099, г. Санкт-Петербург, ул. Калинина, дом 2, корпус 4, литера А.