16 Ω, Low Parasitic Capacitance and Leakage, +12 V / +5 V / +3 V / ± 5 V Quad SPST Switches

DESCRIPTION

The DG411LE, DG412LE, and DG413LE are monolithic quad single-pole-single-throw analog switches. The DG411LE and DG412LE differ only in that they respond to opposite logic levels. The DG413LE has two normally open and two normally closed switches. It can be given various configurations, including four SPST, two SPDT, and one DPDT.

The DG411LE, DG412LE, and DG413LE offer low on resistance of 16 Ω, low parasitic capacitance of 15 pF switch on capacitance, and low charge injection over the signal swing range.

The DG411LE, DG412LE, and DG413LE operate on single and dual supplies. Single supply voltage ranges from 3 V to 16 V while dual supply operation is recommended with ± 3 V to ± 8 V. Each switch conducts equally well in both direction when on, and blocks input voltages up to the supply levels when off.

The DG411LE, DG412LE, and DG413LE are available in 16 lead TSSOP, SOIC, and PDIP packages.

FEATURES

- 3 V to 16 V single supply or ± 3 V to ± 8 V dual supply
- On-resistance $R_{DS(on)}$: 16 Ω
- Low parasitic capacitance:
  $C_{D(ON)}$: 15 pF
  $C_{S(OFF)}$: 5 pF
- Less than 8 pC charge injection over the full signal swing range
- Fast switching t_{ON}: 16 ns
  t_{OFF}: 9 ns
- TTL, CMOS compatible
- Material categorization: for definitions of compliance please see www.vishay.com/doc?99912

Pb Available
RoHS* Available

Note

* This datasheet provides information about parts that are RoHS-compliant and / or parts that are non-RoHS-compliant. For example, parts with lead (Pb) terminations are not RoHS-compliant. Please see the information / tables in this datasheet for details.

BENEFITS

- Wide operation voltage range
- Low signal errors and distortion
- Fast switching time
- Minimized switching glitch

APPLICATIONS

- Automatic test equipment
- Data acquisition systems
- Meters and instruments
- Medical and healthcare systems
- Communication systems
- Audio and video signal routing
- Relay replacement
- Battery powered systems
- Computer peripherals
- Audio and video signal routing

FUNCTIONAL BLOCK DIAGRAM AND PIN CONFIGURATION

DG411LE, DG412LE
Dual-In-Line, TSSOP and SOIC

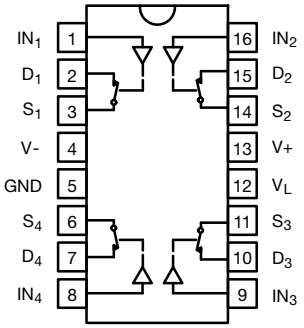

Top View

DG413LE
Dual-In-Line, TSSOP and SOIC

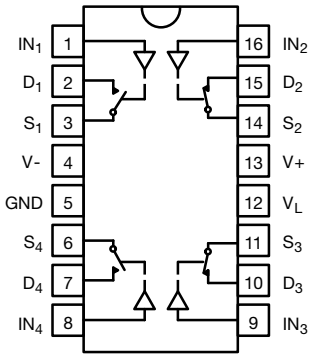

Top View

For technical questions, contact: analogswitchsupport@vishay.com
THIS DOCUMENT IS SUBJECT TO CHANGE WITHOUT NOTICE. THE PRODUCTS DESCRIBED HEREIN AND THIS DOCUMENT ARE SUBJECT TO SPECIFIC DISCLAIMERS, SET FORTH AT www.vishay.com/doc?91000

TRUTH TABLE		
LOGIC	DG411LE	DG412LE
0	ON	OFF
1	OFF	ON

Logic "0" ≤ 0.8 V
Logic "1" ≥ 2.4 V

TRUTH TABLE		
LOGIC	SW_1, SW_4	SW_2, SW_3
0	OFF	ON
1	ON	OFF

Logic "0" ≤ 0.8 V
Logic "1" ≥ 2.4 V

ORDERING INFORMATION				
TEMP. RANGE	CONFIGURATION	PACKAGE	PART NUMBER	MIN. ORDER / PACK. QUANTITY
-40 °C to +85 °C Lead-free	DG411LE	16-pin TSSOP	DG411LEDQ-GE3	Tube 360 units
			DG411LEDQ-T1-GE3	Tape and reel, 3000 units
		16-pin SOIC	DG411LEDY-GE3	Tube 500 units
			DG411LEDY-T1-GE3	Tape and reel, 2500 units
		16-pin PDIP	DG411LEDJ-GE3	Tube 500 units
	DG412LE	16-pin TSSOP	DG412LEDQ-GE3	Tube 360 units
			DG412LEDQ-T1-GE3	Tape and reel, 3000 units
		16-pin SOIC	DG412LEDY-GE3	Tube 500 units
			DG412LEDY-T1-GE3	Tape and reel, 2500 units
		16-pin PDIP	DG412LEDJ-GE3	Tube 500 units
	DG413LE	16-pin TSSOP	DG413LEDQ-GE3	Tube 360 units
			DG413LEDQ-T1-GE3	Tape and reel, 3000 units
		16-pin SOIC	DG413LEDY-GE3	Tube 500 units
			DG413LEDY-T1-GE3	Tape and reel, 2500 units
		16-pin PDIP	DG413LEDJ-GE3	Tube 500 units

ABSOLUTE MAXIMUM RATINGS			
PARAMETER		LIMIT	UNIT
V+ to V-		-0.3 to +18	V
GND to V-		18	
V_L		(GND -0.3) to (V+) +0.3	
I_N [a], V_S, V_D		-0.3 to (V+) +0.3 or 30 mA, whichever occurs first	
Continuous Current (Any terminal)		30	mA
Peak Current, S or D (Pulsed 1 ms, 10 % duty cycle)		100	
Storage Temperature	(DQ, DY suffix)	-65 to +125	°C
	(AK suffix)	-65 to +150	
Power Dissipation (Packages) [b]	16-pin TSSOP [c]	450	mW
	16-pin SOIC [d]	650	
	16-pin CerDIP [e]	900	
ESD Human Body Model (HBM); per ANSI / ESDA / JEDEC® JS-001		2500	V
Latch Up Current, per JESD78D		400	mA

Notes

a. Signals on S_X, D_X, or IN_X exceeding V+ or V- will be clamped by internal diodes. Limit forward diode current to maximum current ratings.
b. All leads welded or soldered to PC board.
c. Derate 7 mW/°C above 75 °C.
d. Derate 7.6 mW/°C above 75 °C
e. Derate 12 mW/°C above 75 °C.

Stresses beyond those listed under "Absolute Maximum Ratings" may cause permanent damage to the device. These are stress ratings only, and functional operation of the device at these or any other conditions beyond those indicated in the operational sections of the specifications is not implied. Exposure to absolute maximum rating conditions for extended periods may affect device reliability.

THIS DOCUMENT IS SUBJECT TO CHANGE WITHOUT NOTICE. THE PRODUCTS DESCRIBED HEREIN AND THIS DOCUMENT ARE SUBJECT TO SPECIFIC DISCLAIMERS, SET FORTH AT www.vishay.com/doc?91000

SPECIFICATIONS [a] (Single Supply 12 V)									
PARAMETER	**SYMBOL**	**TEST CONDITIONS UNLESS OTHERWISE SPECIFIED** V+ = 12 V, V- = 0 V V_L = 5 V, V_{IN} = 2.4 V, 0.8 V [f]	**TEMP.** [b]	**TYP.** [c]	**A SUFFIX LIMITS** -55 °C to +125 °C		**D SUFFIX LIMITS** -40 °C to +85 °C		**UNIT**
					MIN. [d]	**MAX.** [d]	**MIN.** [d]	**MAX.** [d]	
Analog Switch									
Analog Signal Range [e]	V_{ANALOG}		Full	-	0	12	0	12	V
Drain-Source On-Resistance	$R_{DS(on)}$	V+ = 10.8 V, V- = 0 V I_S = 10 mA, V_D = 2/9 V	Room	16	-	26	-	26	Ω
			Full	-	-	40	-	35	
Switch Off Leakage Current	$I_{S(off)}$	V_D = 1/11 V, V_S = 11/1 V	Room	-	-1	1	-1	1	nA
			Full	-	-15	15	-10	10	
	$I_{D(off)}$		Room	-	-1	1	-1	1	
			Full	-	-15	15	-10	10	
Channel On Leakage Current	$I_{D(on)}$	V_S = V_D = 11/1 V	Room	-	-1	1	-1	1	
			Full	-	-15	15	-10	10	
Digital Control									
Input Current, VIN Low	I_{IL}	V_{IN} under test = 0.8 V	Full	0.01	-1.5	1.5	-1	1	µA
Input Current, VIN High	I_{IH}	V_{IN} under test = 2.4 V	Full		-1.5	1.5	-1	1	
Dynamic Characteristics									
Turn-On Time	t_{ON}	R_L = 300 Ω, C_L = 35 pF, V_S = 5 V, see figure 2	Room	16	-	50	-	50	ns
			Full	-	-	70	-	60	
Turn-Off Time	t_{OFF}		Room	9	-	30	-	30	
			Full	-	-	48	-	40	
Break-Before-Make Time Delay	t_D	DG413L only, V_S = 5 V, R_L = 300 Ω, CL = 35 pF	Room	5	-	-	-	-	
Charge Injection [e]	Q	V_g = 0 V, R_g = 0 Ω, C_L = 10 nF	Room	6.6	-	-	-	-	pC
Off-Isolation [e]	OIRR	R_L = 50 Ω, C_L = 5 pF, f = 1 MHz	Room	68.4	-	-	-	-	dB
Channel-to-Channel Crosstalk [e]	X_{TALK}		Room	114	-	-	-	-	
Source Off Capacitance [e]	$C_{S(off)}$	f = 1 MHz	Room	5	-	-	-	-	pF
Drain Off Capacitance [e]	$C_{D(off)}$		Room	6	-	-	-	-	
Channel-On Capacitance [e]	$C_{D(on)}$		Room	15	-	-	-	-	
Power Supplies									
Positive Supply Current	I+	V_{IN} = 0 V or 5 V	Room	0.02	-	1	-	1	µA
			Full	-	-	7.5	-	5	
Negative Supply Current	I-		Room	-0.002	-1	-	-1	-	
			Full	-	-7.5	-	-5	-	
Logic Supply Current	I_L		Room	0.002	-	1	-	1	
			Full	-	-	7.5	-	5	
Ground Current	I_{GND}		Room	-0.002	-1	-	-1	-	
			Full	-	-7.5	-	-5	-	

Notes

a. Refer to PROCESS OPTION FLOWCHART.
b. Room = 25 °C, full = as determined by the operating temperature suffix.
c. Typical values are for DESIGN AID ONLY, not guaranteed nor subject to production testing.
d. The algebraic convention whereby the most negative value is a minimum and the most positive a maximum, is used in this datasheet.
e. Guaranteed by design, not subject to production test.
f. V_{IN} = input voltage to perform proper function.
g. Leakage parameters are guaranteed by worst case test conditions and not subject to test.

THIS DOCUMENT IS SUBJECT TO CHANGE WITHOUT NOTICE. THE PRODUCTS DESCRIBED HEREIN AND THIS DOCUMENT ARE SUBJECT TO SPECIFIC DISCLAIMERS, SET FORTH AT www.vishay.com/doc?91000

SPECIFICATIONS [a] (Dual Supply ± 5 V)									
PARAMETER	**SYMBOL**	**TEST CONDITIONS UNLESS OTHERWISE SPECIFIED** V+ = 5 V, V- = -5 V V_L = 5 V, V_{IN} = 2.4 V, 0.8 V [f]	**TEMP.** [b]	**TYP.** [c]	**A SUFFIX LIMITS** -55 °C to +125 °C		**D SUFFIX LIMITS** -40 °C to +85 °C		**UNIT**
					MIN. [d]	**MAX.** [d]	**MIN.** [d]	**MAX.** [d]	
Analog Switch									
Analog Signal Range [e]	V_{ANALOG}		Full	-	-5	5	-5	5	V
Drain-Source On-Resistance	$R_{DS(on)}$	V+ = 5 V, V- = -5 V, I_S = 10 mA, V_D = ± 3.5 V	Room	18	-	30	-	30	Ω
			Full	-	-	42	-	37	
Switch Off Leakage Current [g]	$I_{S(off)}$	V+ = 5.5, V- = -5.5 V, V_D = ± 4.5 V, V_S = ± 4.5 V	Room	-	-1	1	-1	1	nA
			Full	-	-15	15	-10	10	
	$I_{D(off)}$		Room	-	-1	1	-1	1	
			Full	-	-15	15	-10	10	
Channel On Leakage Current [g]	$I_{D(on)}$	V+ = 5.5 V, V- = -5.5 V, V_S = V_D = ± 4.5 V	Room	-	-1	1	-1	1	
			Full	-	-15	15	-10	10	
Digital Control									
Input Current, V_{IN} Low [e]	I_{IL}	V_{IN} under test = 0.8 V	Full	0.05	-1.5	1.5	-1	1	µA
Input Current, V_{IN} High [e]	I_{IH}	V_{IN} under test = 2.4 V	Full	0.05	-1.5	1.5	-1	1	
Dynamic Characteristics									
Turn-On Time [e]	t_{ON}	R_L = 300 Ω, C_L = 35 pF, V_S = ± 3.5 V, see figure 2	Room	17	-	50	-	50	ns
			Full	-	-	70	-	60	
Turn-Off Time [e]	t_{OFF}		Room	12	-	35	-	35	
			Full	-	-	50	-	40	
Break-Before-Make Time Delay [e]	t_D	DG413L only, V_S = 3.5 V, R_L = 300 Ω, C_L = 35 pF	Room	5	-	-	-	-	
Charge Injection [e]	Q	V_g = 0 V, R_g = 0 Ω, C_L = 10 nF	Room	5.8	-	-	-	-	pC
Off Isolation [e]	OIRR	R_L = 50 Ω, C_L = 5 pF, f = 1 MHz	Room	68	-	-	-	-	dB
Channel-to-Channel Crosstalk [e]	X_{TALK}		Room	113	-	-	-	-	
Source Off Capacitance [e]	$C_{S(off)}$	f = 1 MHz	Room	5	-	-	-	-	pF
Drain Off Capacitance [e]	$C_{D(off)}$		Room	6	-	-	-	-	
Channel On Capacitance [e]	$C_{D(on)}$		Room	14	-	-	-	-	
Power Supplies									
Positive Supply Current [e]	I+	V_{IN} = 0 V or 5 V	Room	0.03	-	1	-	1	µA
			Full	-	-	7.5	-	5	
Negative Supply Current [e]	I-		Room	-0.002	-1	-	-1	-	
			Full	-	-7.5	-	-5	-	
Logic Supply Current [e]	I_L		Room	0.002	-	1	-	1	
			Full	-	-	7.5	-	5	
Ground Current [e]	I_{GND}		Room	-0.002	-1	-	-1	-	
			Full	-	-7.5	-	-5	-	

Notes

a. Refer to PROCESS OPTION FLOWCHART.
b. Room = 25 °C, full = as determined by the operating temperature suffix.
c. Typical values are for DESIGN AID ONLY, not guaranteed nor subject to production testing.
d. The algebraic convention whereby the most negative value is a minimum and the most positive a maximum, is used in this datasheet.
e. Guaranteed by design, not subject to production test.
f. V_{IN} = input voltage to perform proper function.
g. Leakage parameters are guaranteed by worst case test conditions and not subject to test.

THIS DOCUMENT IS SUBJECT TO CHANGE WITHOUT NOTICE. THE PRODUCTS DESCRIBED HEREIN AND THIS DOCUMENT ARE SUBJECT TO SPECIFIC DISCLAIMERS, SET FORTH AT www.vishay.com/doc?91000

SPECIFICATIONS [a] (Single Supply 5 V)									
PARAMETER	**SYMBOL**	**TEST CONDITIONS UNLESS OTHERWISE SPECIFIED** V+ = 5 V, V- = 0 V V_L = 5 V, V_{IN} = 2.4 V, 0.8 V [f]	**TEMP.** [b]	**TYP.** [c]	**A SUFFIX LIMITS** -55 °C to +125 °C		**D SUFFIX LIMITS** -40 °C to +85 °C		**UNIT**
					MIN. [d]	**MAX.** [d]	**MIN.** [d]	**MAX.** [d]	
Analog Switch									
Analog Signal Range [e]	V_{ANALOG}		Full	-	-	5	-	5	V
Drain-Source On-Resistance [e]	$R_{DS(on)}$	V+ = 4.5 V, I_S = 5 mA, V_D = 1 V, 3.5 V	Room	36	-	50	-	50	Ω
			Full	-	-	88	-	75	
Dynamic Characteristics									
Turn-On Time [e]	t_{ON}	R_L = 300 Ω, C_L = 35 pF, V_S = 3.5 V, see figure 2	Room	27	-	50	-	50	ns
			Hot	-	-	90	-	60	
Turn-Off Time [e]	t_{OFF}		Room	15	-	30	-	30	
			Hot	-	-	55	-	40	
Break-Before-Make Time Delay [e]	t_D	DG413L only, V_S = 3.5 V, R_L = 300 Ω, C_L = 35 pF	Room	11	-	-	-	-	
Charge Injection [e]	Q	V_g = 0 V, R_g = 0 Ω, C_L = 10 nF	Room	3.3	-	-	-	-	pC
Power Supplies									
Positive Supply Current [e]	I+	V_{IN} = 0 V or 5 V	Room	0.02	-	1	-	1	µA
			Hot	-	-	7.5	-	5	
Negative Supply Current [e]	I-		Room	-0.002	-1	-	-1	-	
			Hot	-	-7.5	-	-5	-	
Logic Supply Current [e]	I_L		Room	0.002	-	1	-	1	
			Hot	-	-	7.5	-	5	
Ground Current [e]	I_{GND}		Room	-0.002	-1	-	-1	-	
			Hot	-	-7.5	-	-5	-	

Notes

a. Refer to PROCESS OPTION FLOWCHART.
b. Room = 25 °C, full = as determined by the operating temperature suffix.
c. Typical values are for DESIGN AID ONLY, not guaranteed nor subject to production testing.
d. The algebraic convention whereby the most negative value is a minimum and the most positive a maximum, is used in this datasheet.
e. Guaranteed by design, not subject to production test.
f. V_{IN} = input voltage to perform proper function.
g. Leakage parameters are guaranteed by worst case test conditions and not subject to test.

THIS DOCUMENT IS SUBJECT TO CHANGE WITHOUT NOTICE. THE PRODUCTS DESCRIBED HEREIN AND THIS DOCUMENT ARE SUBJECT TO SPECIFIC DISCLAIMERS, SET FORTH AT www.vishay.com/doc?91000

SPECIFICATIONS [a] (Single Supply 3 V)									
PARAMETER	**SYMBOL**	**TEST CONDITIONS UNLESS OTHERWISE SPECIFIED** V+ = 3 V, V- = 0 V V_L = 3 V, V_{IN} = 0.4 V, 2.0 V [f]	**TEMP.** [b]	**TYP.** [c]	**A SUFFIX LIMITS** -55 °C to +125 °C		**D SUFFIX LIMITS** -40 °C to +85 °C		**UNIT**
					MIN. [d]	**MAX.** [d]	**MIN.** [d]	**MAX.** [d]	
Analog Switch									
Analog Signal Range [e]	V_{ANALOG}		Full	-	0	3	0	3	V
Drain-Source On-Resistance	$R_{DS(on)}$	V+ = 2.7 V, V- = 0 V, I_S = 5 mA, V_D = 0.5, 2.2 V	Room	106	-	130	-	130	Ω
			Full	-	-	150	-	140	
Switch Off Leakage Current [g]	$I_{S(off)}$	V+ = 3.3, V- = 0 V, V_D = 1, 2 V, V_S = 2, 1 V	Room	-	-1	1	-1	1	nA
			Full	-	-15	15	-10	10	
	$I_{D(off)}$		Room	-	-1	1	-1	1	
			Full	-	-15	15	-10	10	
Channel On Leakage Current [g]	$I_{D(on)}$	V+ = 3.3 V, V- = 0 V, V_S = V_D = 1, 2 V	Room	-	-1	1	-1	1	
			Full	-	-15	15	-10	10	
Digital Control									
Input Current, V_{IN} Low	I_{IL}	V_{IN} under test = 0.4 V	Full	0.005	-1.5	1.5	-1	1	µA
Input Current, V_{IN} High	I_{IH}	V_{IN} under test = 2.4 V	Full	0.005	-1.5	1.5	-1	1	
Dynamic Characteristics									
Turn-On Time	t_{ON}	R_L = 300 Ω, C_L = 35 pF, V_S = 1.5 V, see figure 2	Room	57	-	85	-	85	ns
			Full	-	-	150	-	110	
Turn-Off Time	t_{OFF}		Room	25	-	60	-	60	
			Full	-	-	100	-	85	
Break-Before-Make Time Delay	t_D	DG413L only, V_S = 1.5 V, R_L = 300 Ω, C_L = 35 pF	Room	24	-	-	-	-	
Charge Injection [e]	Q	V_g = 0 V, R_g = 0 Ω, C_L = 10 nF	Room	2	-	-	-	-	pC
Off Isolation [e]	OIRR	R_L = 50 Ω, C_L = 5 pF, f = 1 MHz	Room	68	-	-	-	-	dB
Channel-to-Channel Crosstalk [e]	X_{TALK}		Room	107	-	-	-	-	
Source Off Capacitance [e]	$C_{S(off)}$	f = 1 MHz	Room	6	-	-	-	-	pF
Drain Off Capacitance [e]	$C_{D(off)}$		Room	7	-	-	-	-	
Channel On Capacitance [e]	$C_{D(on)}$		Room	15	-	-	-	-	

Notes

a. Refer to PROCESS OPTION FLOWCHART.
b. Room = 25 °C, full = as determined by the operating temperature suffix.
c. Typical values are for DESIGN AID ONLY, not guaranteed nor subject to production testing.
d. The algebraic convention whereby the most negative value is a minimum and the most positive a maximum, is used in this datasheet.
e. Guaranteed by design, not subject to production test.
f. V_{IN} = input voltage to perform proper function.
g. Leakage parameters are guaranteed by worst case test conditions and not subject to test.

THIS DOCUMENT IS SUBJECT TO CHANGE WITHOUT NOTICE. THE PRODUCTS DESCRIBED HEREIN AND THIS DOCUMENT ARE SUBJECT TO SPECIFIC DISCLAIMERS, SET FORTH AT www.vishay.com/doc?91000

TYPICAL CHARACTERISTICS (25 °C, unless otherwise noted)

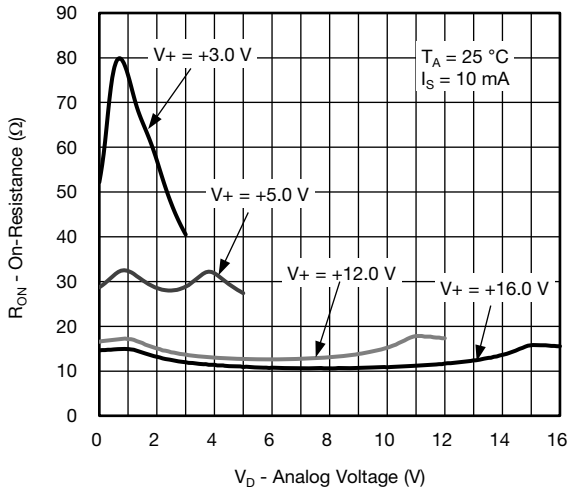

$R_{DS(on)}$ vs. Drain Voltage (Single Supply)

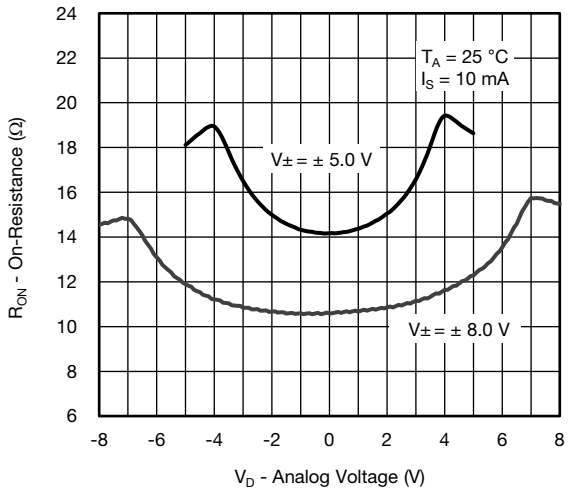

$R_{DS(on)}$ vs. Drain Voltage and Temperature (Single Supply)

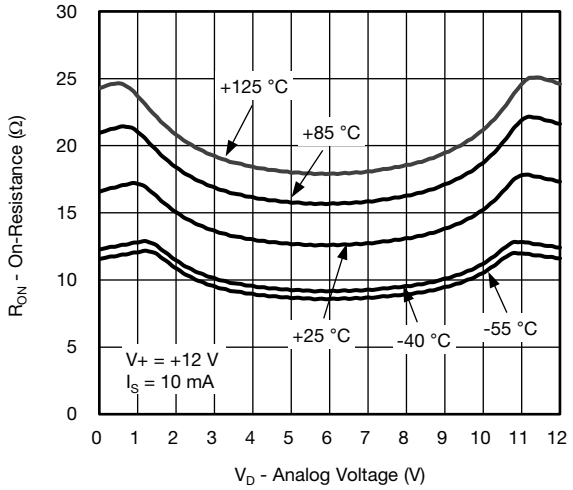

$R_{DS(on)}$ vs. Drain Voltage and Temperature

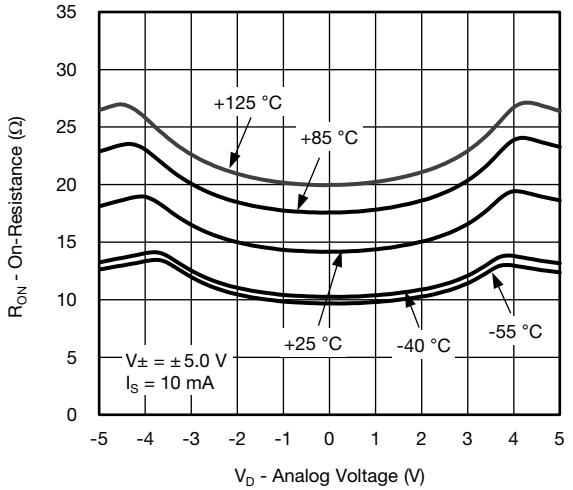

Supply Current vs. Temperature

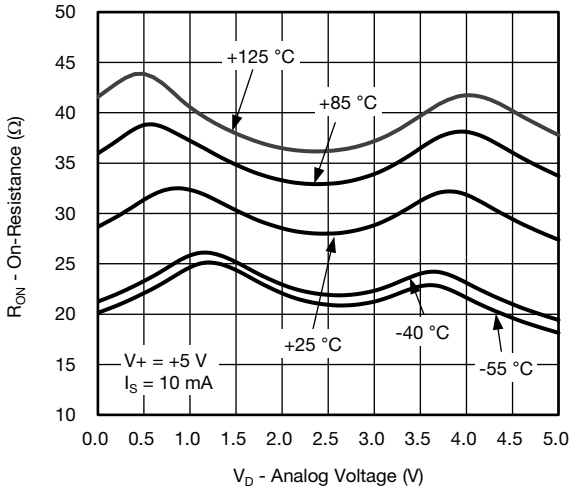

$R_{DS(on)}$ vs. Drain Voltage and Temperature

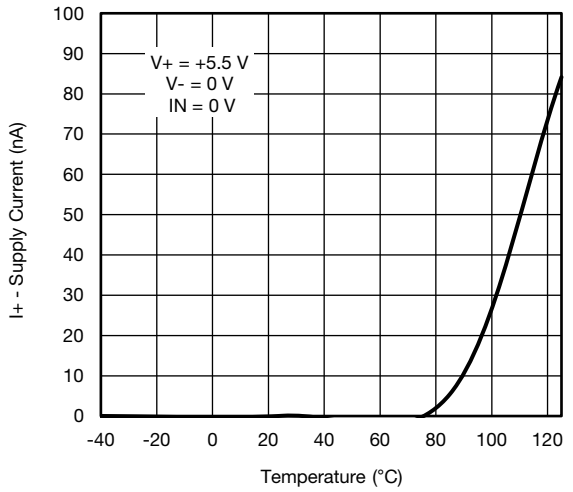

Switching Time vs. Single Supply

For technical questions, contact: analogswitchsupport@vishay.com
THIS DOCUMENT IS SUBJECT TO CHANGE WITHOUT NOTICE. THE PRODUCTS DESCRIBED HEREIN AND THIS DOCUMENT ARE SUBJECT TO SPECIFIC DISCLAIMERS, SET FORTH AT www.vishay.com/doc?91000

TYPICAL CHARACTERISTICS (25 °C, unless otherwise noted)

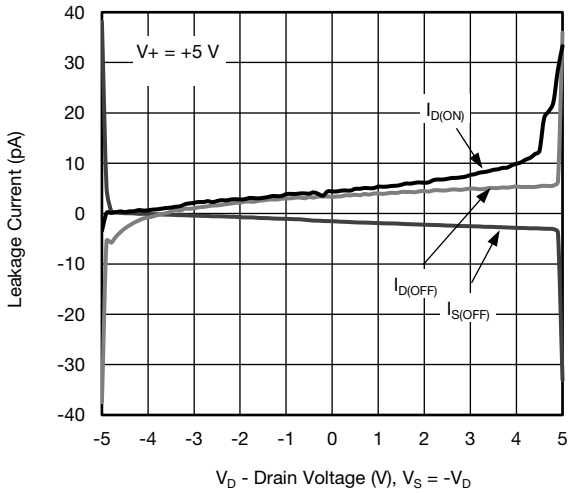

Leakage Current vs. Drain Voltage

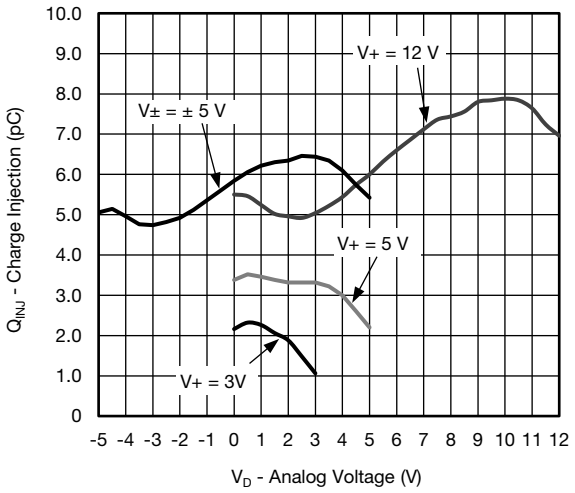

Charge Injection vs. Drain Voltage

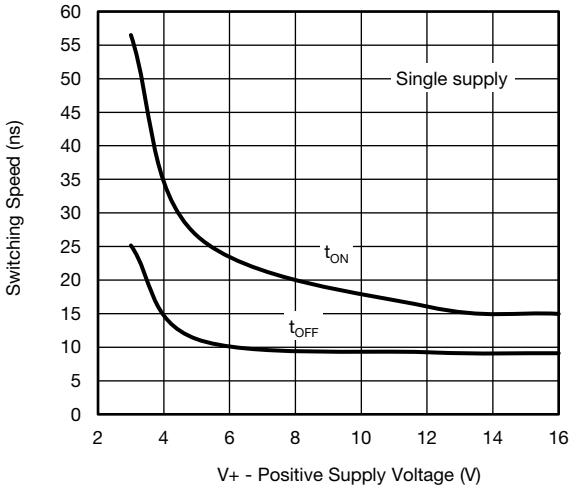

Switching Time vs. Single Supply Voltage

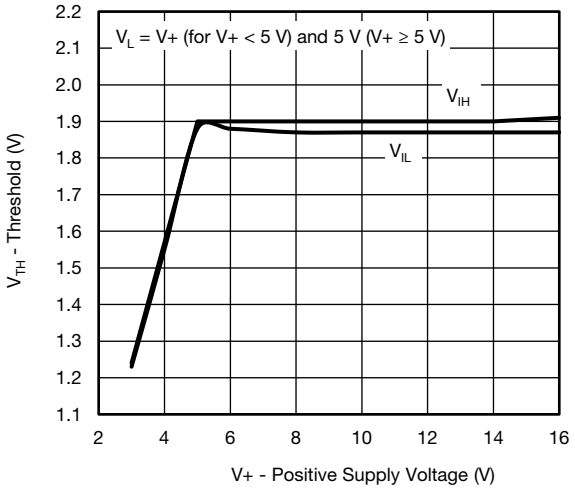

Threshold vs. Single Supply Current

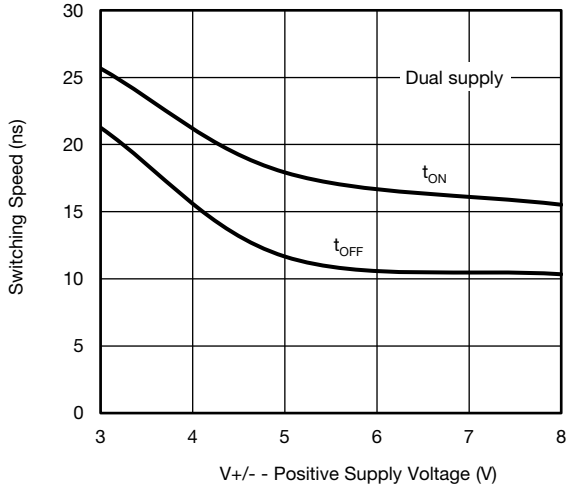

Switching Time vs. Dual Supply Voltage

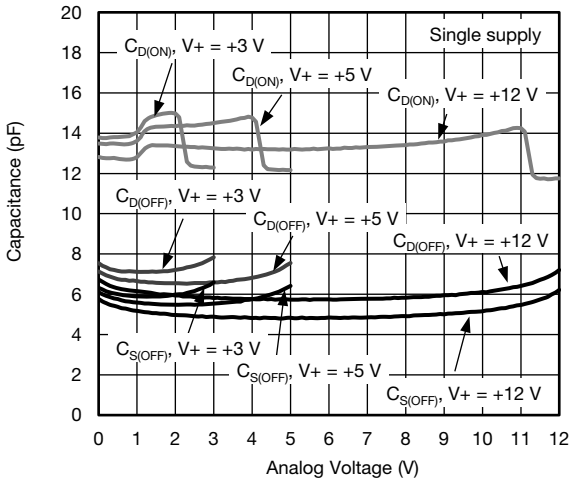

Drain Capacitance vs. Drain Voltage (Single Supply)

For technical questions, contact: analogswitchsupport@vishay.com
THIS DOCUMENT IS SUBJECT TO CHANGE WITHOUT NOTICE. THE PRODUCTS DESCRIBED HEREIN AND THIS DOCUMENT ARE SUBJECT TO SPECIFIC DISCLAIMERS, SET FORTH AT www.vishay.com/doc?91000

TYPICAL CHARACTERISTICS (25 °C, unless otherwise noted)

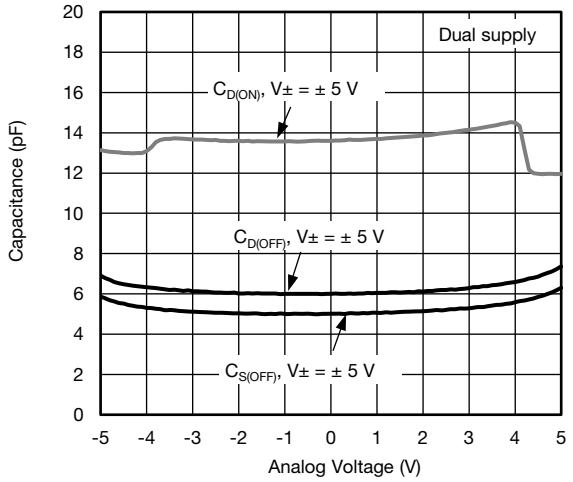

Drain Capacitance vs. Drain Voltage (Dual Supply)

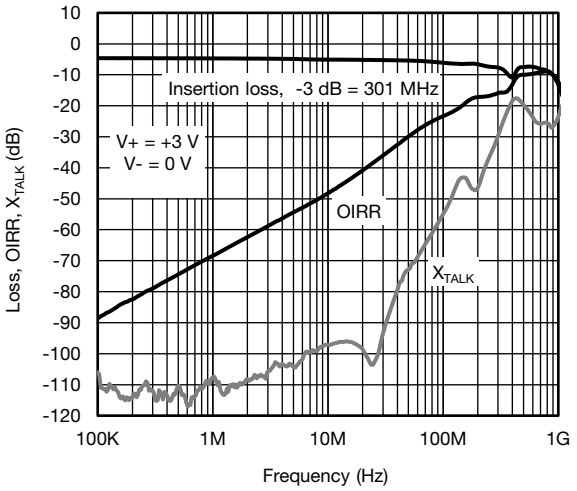

Insertion Loss, Off Isolation and Crosstalk vs. Frequency

SCHEMATIC DIAGRAM (Typical Channel)

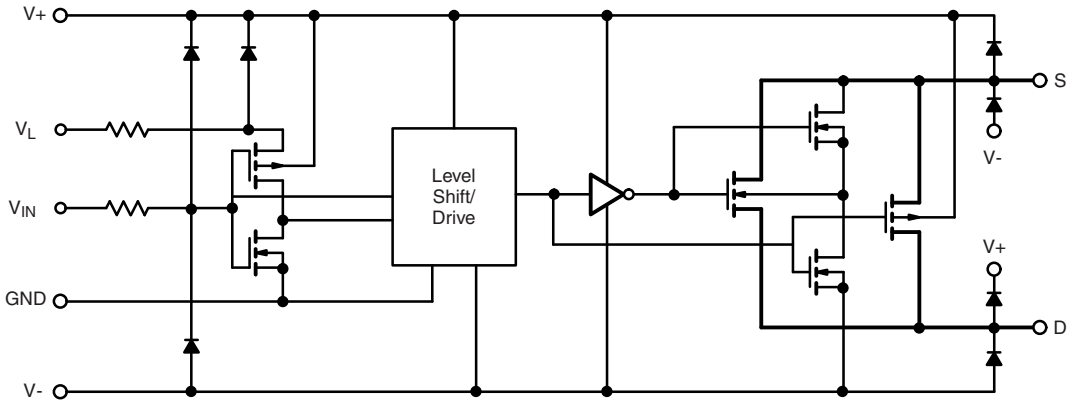

Fig. 1

For technical questions, contact: analogswitchsupport@vishay.com
THIS DOCUMENT IS SUBJECT TO CHANGE WITHOUT NOTICE. THE PRODUCTS DESCRIBED HEREIN AND THIS DOCUMENT ARE SUBJECT TO SPECIFIC DISCLAIMERS, SET FORTH AT www.vishay.com/doc?91000

TEST CIRCUITS

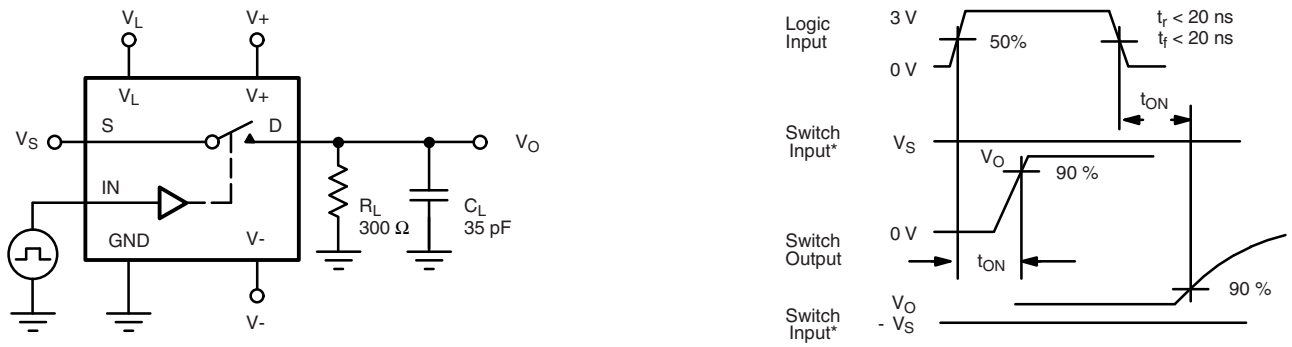

C_L (includes fixture and stray capacitance)

$$V_O = V_S \frac{R_L}{R_L + r_{DS(on)}}$$

Note: Logic input waveform is inverted for switches that have the opposite logic sense control

Fig. 2 - Switching Time

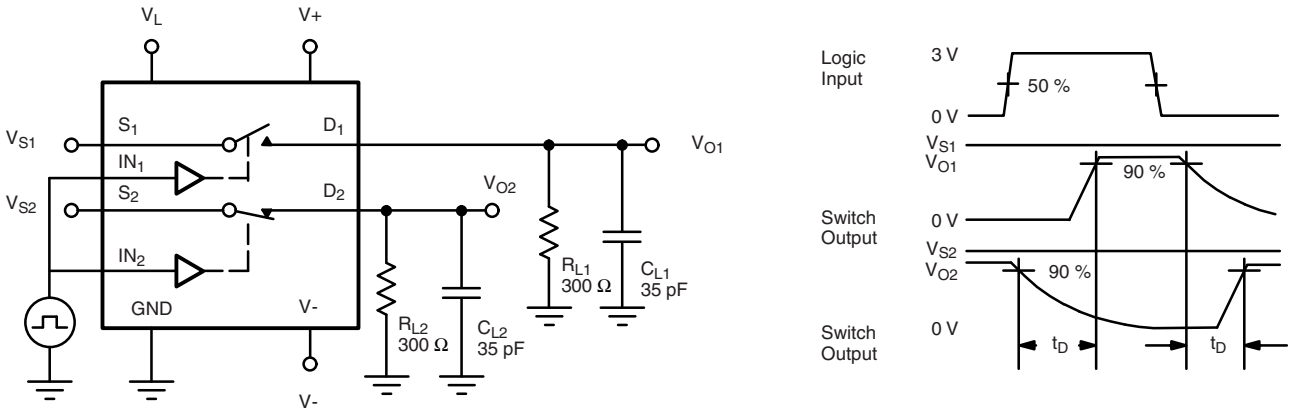

C_L (includes fixture and stray capacitance)

Fig. 3 - Break-Before-Make (DG413LE)

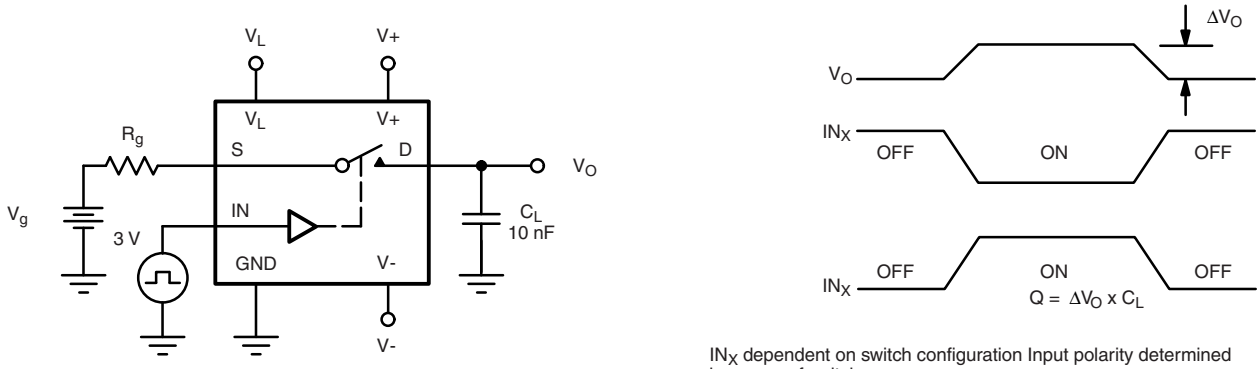

IN_X dependent on switch configuration Input polarity determined by sense of switch.

Fig. 4 - Charge Injection

For technical questions, contact: analogswitchsupport@vishay.com
THIS DOCUMENT IS SUBJECT TO CHANGE WITHOUT NOTICE. THE PRODUCTS DESCRIBED HEREIN AND THIS DOCUMENT ARE SUBJECT TO SPECIFIC DISCLAIMERS, SET FORTH AT www.vishay.com/doc?91000

TEST CIRCUITS

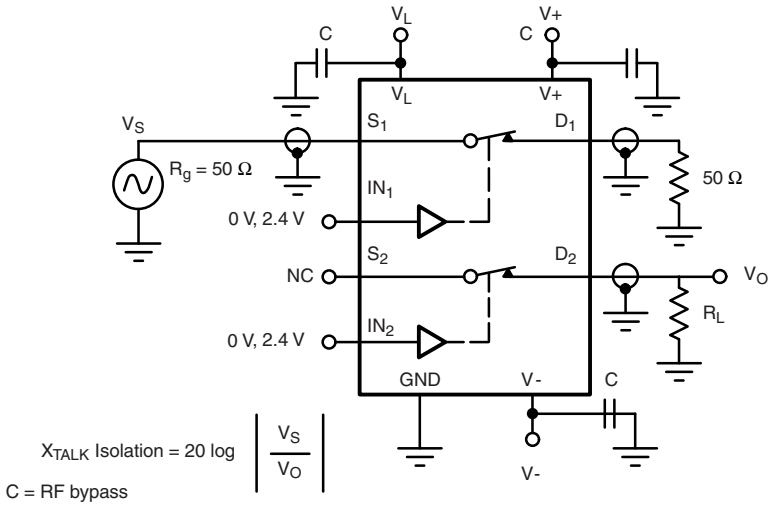

Fig. 5 - Crosstalk

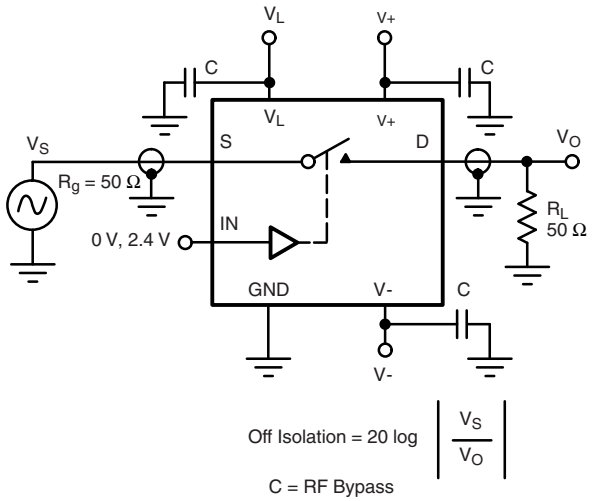

Fig. 6 - Off-Isolation

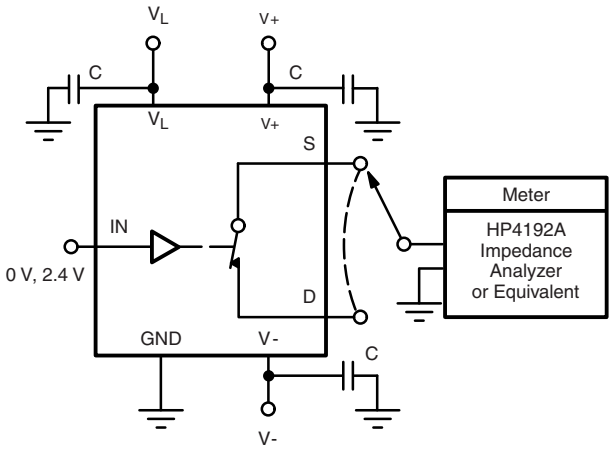

Fig. 7 - Source / Drain Capacitances

Vishay Siliconix maintains worldwide manufacturing capability. Products may be manufactured at one of several qualified locations. Reliability data for Silicon Technology and Package Reliability represent a composite of all qualified locations. For related documents such as package/tape drawings, part marking, and reliability data, see www.vishay.com/ppg?78091.

THIS DOCUMENT IS SUBJECT TO CHANGE WITHOUT NOTICE. THE PRODUCTS DESCRIBED HEREIN AND THIS DOCUMENT ARE SUBJECT TO SPECIFIC DISCLAIMERS, SET FORTH AT www.vishay.com/doc?91000

SOIC (NARROW): 16-LEAD

JEDEC Part Number: MS-012

Dim	MILLIMETERS		INCHES	
	Min	Max	Min	Max
A	1.35	1.75	0.053	0.069
A_1	0.10	0.20	0.004	0.008
B	0.38	0.51	0.015	0.020
C	0.18	0.23	0.007	0.009
D	9.80	10.00	0.385	0.393
E	3.80	4.00	0.149	0.157
e	1.27 BSC		0.050 BSC	
H	5.80	6.20	0.228	0.244
L	0.50	0.93	0.020	0.037
⊘	0°	8°	0°	8°

ECN: S-03946—Rev. F, 09-Jul-01
DWG: 5300

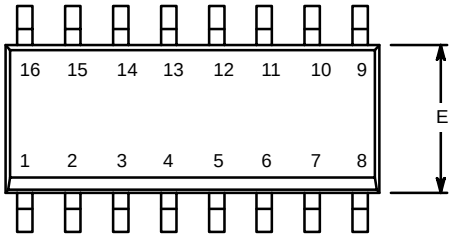

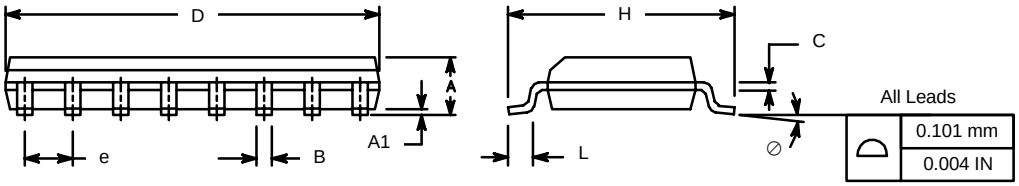

PDIP: 16-LEAD

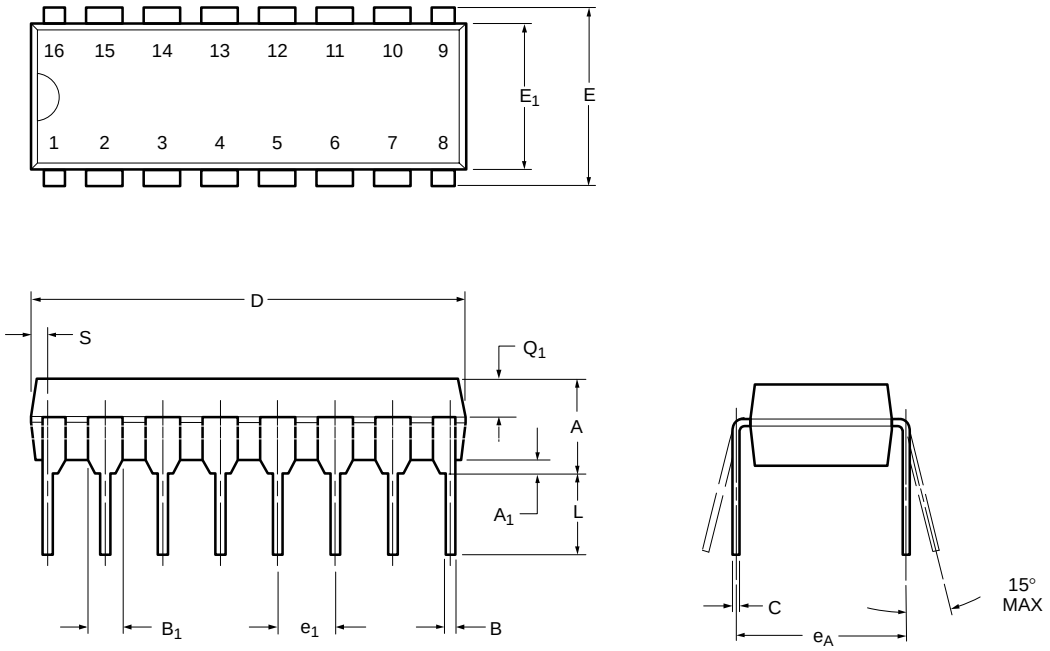

Dim	MILLIMETERS		INCHES	
	Min	Max	Min	Max
A	3.81	5.08	0.150	0.200
A_1	0.38	1.27	0.015	0.050
B	0.38	0.51	0.015	0.020
B_1	0.89	1.65	0.035	0.065
C	0.20	0.30	0.008	0.012
D	18.93	21.33	0.745	0.840
E	7.62	8.26	0.300	0.325
E_1	5.59	7.11	0.220	0.280
e_1	2.29	2.79	0.090	0.110
e_A	7.37	7.87	0.290	0.310
L	2.79	3.81	0.110	0.150
Q_1	1.27	2.03	0.050	0.080
S	0.38	1.52	.015	0.060
ECN: S-03946—Rev. D, 09-Jul-01 DWG: 5482				

TSSOP: 16-LEAD

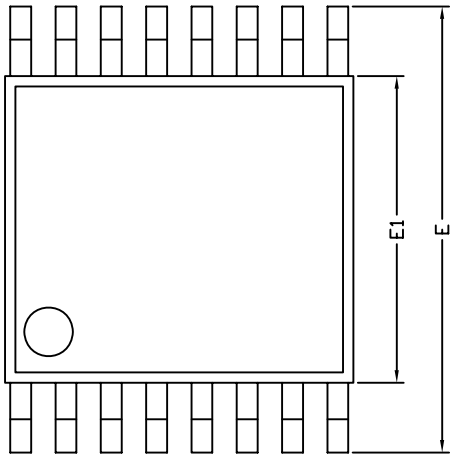

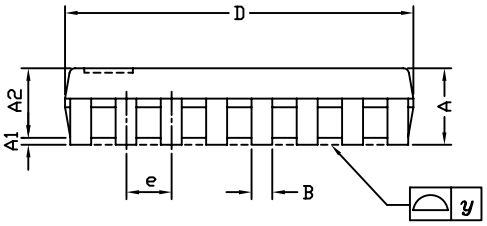

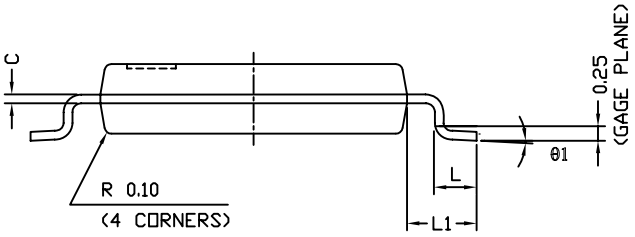

Symbols	DIMENSIONS IN MILLIMETERS		
	Min	Nom	Max
A	-	1.10	1.20
A1	0.05	0.10	0.15
A2	-	1.00	1.05
B	0.22	0.28	0.38
C	-	0.127	-
D	4.90	5.00	5.10
E	6.10	6.40	6.70
E1	4.30	4.40	4.50
e	-	0.65	-
L	0.50	0.60	0.70
L1	0.90	1.00	1.10
y	-	-	0.10
θ1	0°	3°	6°
ECN: S-61920-Rev. D, 23-Oct-06 DWG: 5624			

RECOMMENDED MINIMUM PAD FOR TSSOP-16

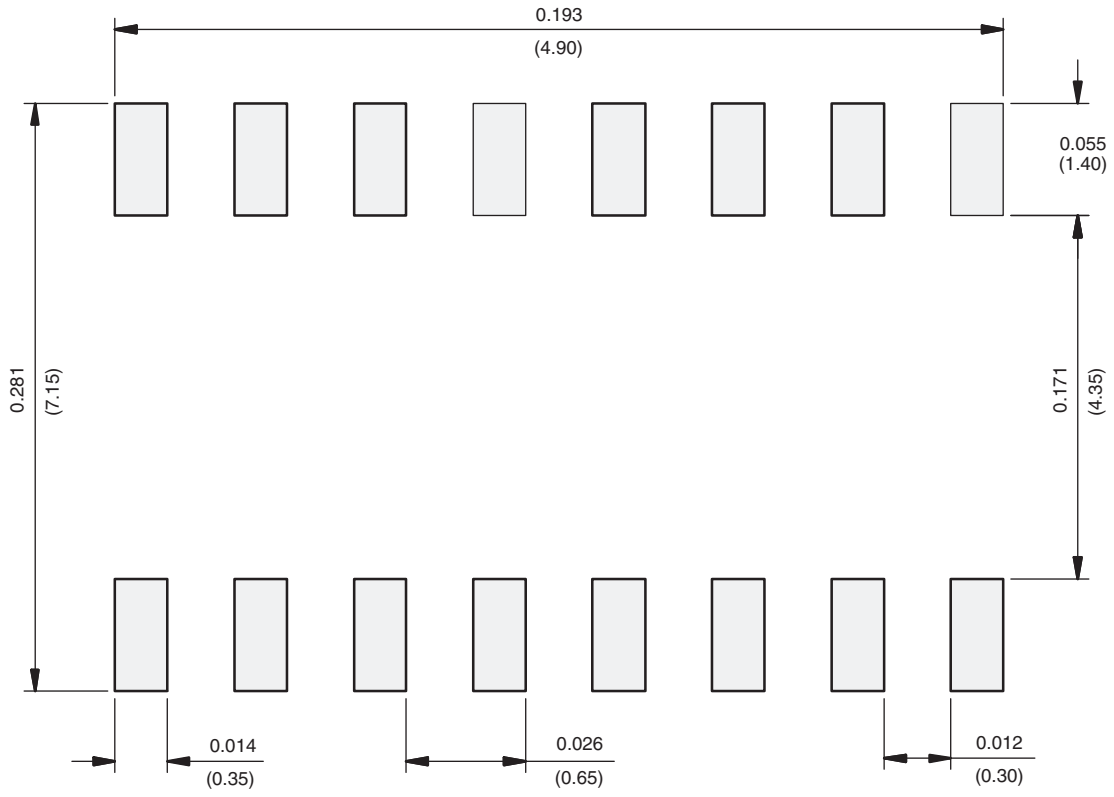

Recommended Minimum Pads
Dimensions in inches (mm)

THIS DOCUMENT IS SUBJECT TO CHANGE WITHOUT NOTICE. THE PRODUCTS DESCRIBED HEREIN AND THIS DOCUMENT ARE SUBJECT TO SPECIFIC DISCLAIMERS, SET FORTH AT www.vishay.com/doc?91000

RECOMMENDED MINIMUM PADS FOR SO-16

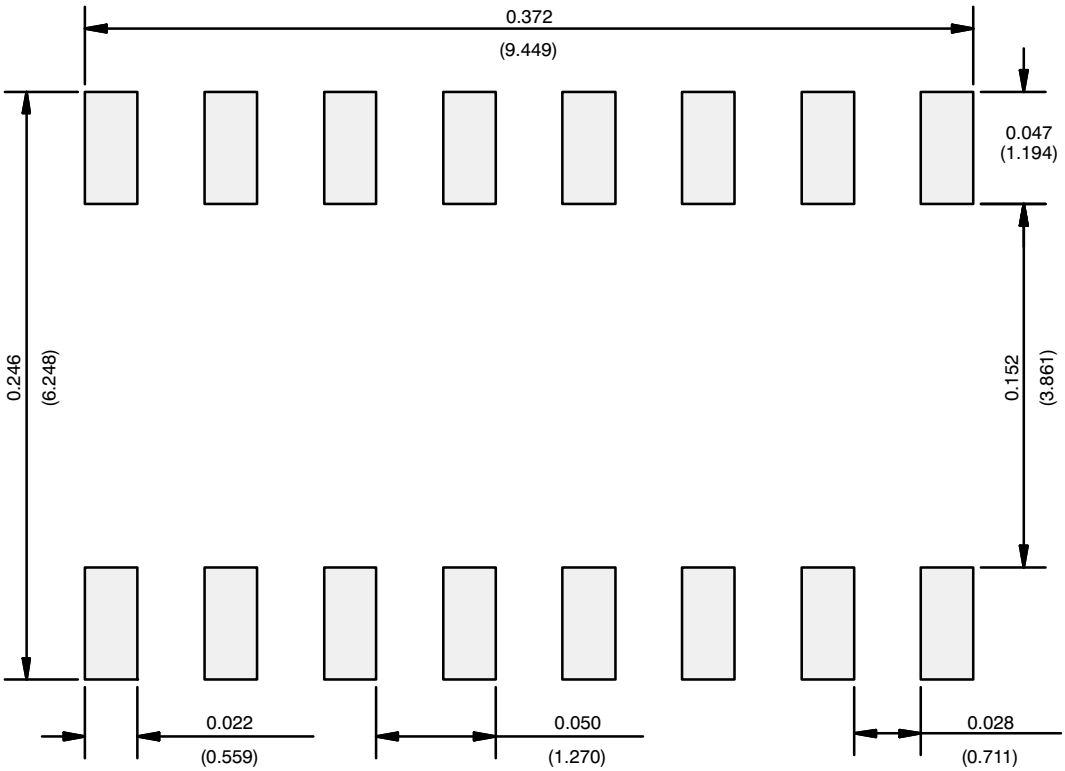

Recommended Minimum Pads
Dimensions in Inches/(mm)

Return to Index

Disclaimer

ALL PRODUCT, PRODUCT SPECIFICATIONS AND DATA ARE SUBJECT TO CHANGE WITHOUT NOTICE TO IMPROVE RELIABILITY, FUNCTION OR DESIGN OR OTHERWISE.

Vishay Intertechnology, Inc., its affiliates, agents, and employees, and all persons acting on its or their behalf (collectively, "Vishay"), disclaim any and all liability for any errors, inaccuracies or incompleteness contained in any datasheet or in any other disclosure relating to any product.

Vishay makes no warranty, representation or guarantee regarding the suitability of the products for any particular purpose or the continuing production of any product. To the maximum extent permitted by applicable law, Vishay disclaims (i) any and all liability arising out of the application or use of any product, (ii) any and all liability, including without limitation special, consequential or incidental damages, and (iii) any and all implied warranties, including warranties of fitness for particular purpose, non-infringement and merchantability.

Statements regarding the suitability of products for certain types of applications are based on Vishay's knowledge of typical requirements that are often placed on Vishay products in generic applications. Such statements are not binding statements about the suitability of products for a particular application. It is the customer's responsibility to validate that a particular product with the properties described in the product specification is suitable for use in a particular application. Parameters provided in datasheets and/or specifications may vary in different applications and performance may vary over time. All operating parameters, including typical parameters, must be validated for each customer application by the customer's technical experts. Product specifications do not expand or otherwise modify Vishay's terms and conditions of purchase, including but not limited to the warranty expressed therein.

Except as expressly indicated in writing, Vishay products are not designed for use in medical, life-saving, or life-sustaining applications or for any other application in which the failure of the Vishay product could result in personal injury or death. Customers using or selling Vishay products not expressly indicated for use in such applications do so at their own risk. Please contact authorized Vishay personnel to obtain written terms and conditions regarding products designed for such applications.

No license, express or implied, by estoppel or otherwise, to any intellectual property rights is granted by this document or by any conduct of Vishay. Product names and markings noted herein may be trademarks of their respective owners.

Material Category Policy

Vishay Intertechnology, Inc. hereby certifies that all its products that are identified as RoHS-Compliant fulfill the definitions and restrictions defined under Directive 2011/65/EU of The European Parliament and of the Council of June 8, 2011 on the restriction of the use of certain hazardous substances in electrical and electronic equipment (EEE) - recast, unless otherwise specified as non-compliant.

Please note that some Vishay documentation may still make reference to RoHS Directive 2002/95/EC. We confirm that all the products identified as being compliant to Directive 2002/95/EC conform to Directive 2011/65/EU.

Vishay Intertechnology, Inc. hereby certifies that all its products that are identified as Halogen-Free follow Halogen-Free requirements as per JEDEC JS709A standards. Please note that some Vishay documentation may still make reference to the IEC 61249-2-21 definition. We confirm that all the products identified as being compliant to IEC 61249-2-21 conform to JEDEC JS709A standards.

Компания «ЭлектроПласт» предлагает заключение долгосрочных отношений при поставках импортных электронных компонентов на взаимовыгодных условиях!

Наши преимущества:

- Оперативные поставки широкого спектра электронных компонентов отечественного и импортного производства напрямую от производителей и с крупнейших мировых складов;
- Поставка более 17-ти миллионов наименований электронных компонентов;
- Поставка сложных, дефицитных, либо снятых с производства позиций;
- Оперативные сроки поставки под заказ (от 5 рабочих дней);
- Экспресс доставка в любую точку России;
- Техническая поддержка проекта, помощь в подборе аналогов, поставка прототипов;
- Система менеджмента качества сертифицирована по Международному стандарту ISO 9001;
- Лицензия ФСБ на осуществление работ с использованием сведений, составляющих государственную тайну;
- Поставка специализированных компонентов (Xilinx, Altera, Analog Devices, Intersil, Interpoint, Microsemi, Aeroflex, Peregrine, Syfer, Eurofarad, Texas Instrument, Miteq, Cobham, E2V, MA-COM, Hittite, Mini-Circuits,General Dynamics и др.);

Помимо этого, одним из направлений компании «ЭлектроПласт» является направление «Источники питания». Мы предлагаем Вам помощь Конструкторского отдела:

- Подбор оптимального решения, техническое обоснование при выборе компонента;
- Подбор аналогов;
- Консультации по применению компонента;
- Поставка образцов и прототипов;
- Техническая поддержка проекта;
- Защита от снятия компонента с производства.

Как с нами связаться

Телефон: 8 (812) 309 58 32 (многоканальный)
Факс: 8 (812) 320-02-42
Электронная почта: org@eplast1.ru
Адрес: 198099, г. Санкт-Петербург, ул. Калинина, дом 2, корпус 4, литера А.