THIS DRAWING IS UNPUBLISHED. RELEASED FOR PUBLICATION 20
© COPYRIGHT 20 BY - ALL RIGHTS RESERVED.

LOC	DIST
GP	00

REVISIONS

P	LTR	DESCRIPTION	DATE	DWN	APVD
	6	REVISED	21OCT2011	MEC	MDM
	7	REVISED	21OCT2011	MEC	MDM

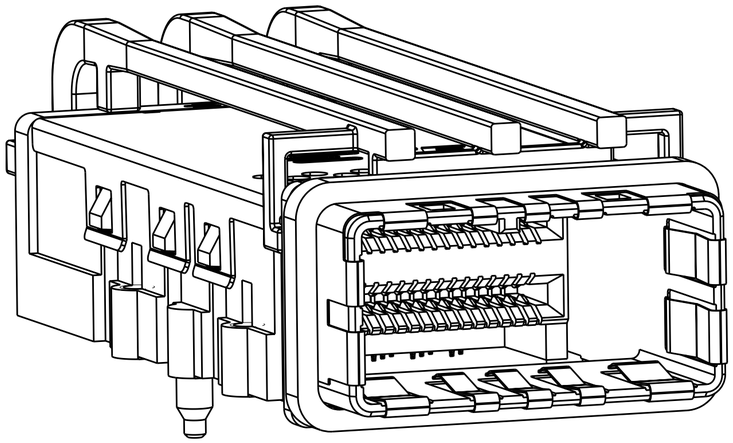

2149159-1
SCALE 4:1

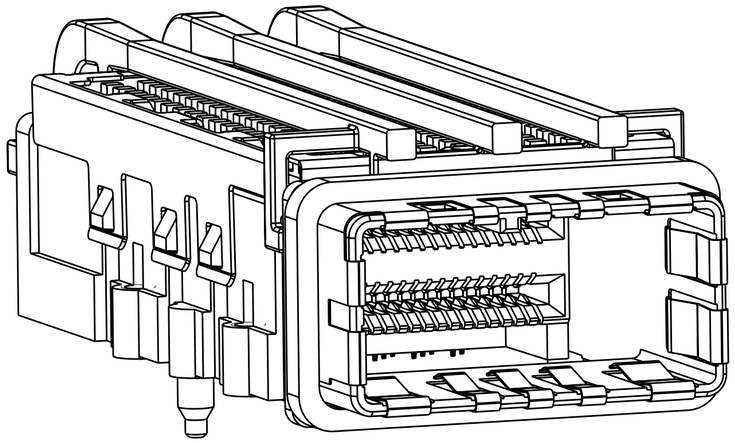

2149159-3
SCALE 4:1

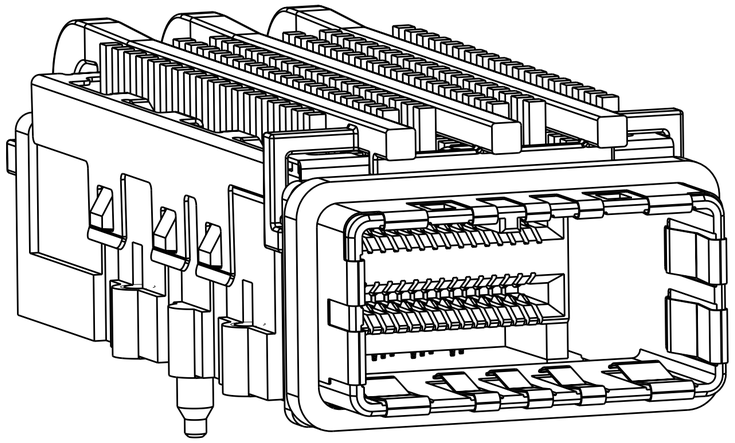

2149159-5
SCALE 4:1

	E	RECEPTACLE HOUSING SUB-ASSEMBLY	FINISH	DESCRIPTION	PART NUMBER
OBSOLETE	23.5	2149448-2	3	84 POSITION RECEPTACLE ASSEMBLY WITH LIGHTPIPE AND HEAT SINK	2149159-8
	23.5	2149448-1	2	84 POSITION RECEPTACLE ASSEMBLY WITH LIGHTPIPE AND HEAT SINK	2149159-7
OBSOLETE	16.5	2149448-2	3	84 POSITION RECEPTACLE ASSEMBLY WITH LIGHTPIPE AND HEAT SINK	2149159-6
	16.5	2149448-1	2	84 POSITION RECEPTACLE ASSEMBLY WITH LIGHTPIPE AND HEAT SINK	2149159-5
OBSOLETE	14.2	2149448-2	3	84 POSITION RECEPTACLE ASSEMBLY WITH LIGHTPIPE AND HEAT SINK	2149159-4
	14.2	2149448-1	2	84 POSITION RECEPTACLE ASSEMBLY WITH LIGHTPIPE AND HEAT SINK	2149159-3
OBSOLETE	-	2149448-2	3	884 POSITION RECEPTACLE ASSEMBLY WITH LIGHTPIPE	2149159-2
	-	2149448-1	2	84 POSITION RECEPTACLE ASSEMBLY WITH LIGHTPIPE	2149159-1

PRELIMINARY PART- NOT RELEASED FOR PRODUCTION

THIS DRAWING IS A CONTROLLED DOCUMENT.

DIMENSIONS: mm

TOLERANCES UNLESS OTHERWISE SPECIFIED:

0 PLC	±0.25
1 PLC	±0.25
2 PLC	±0.25
3 PLC	±0.25
4 PLC	±0.25
ANGLES	±-

MATERIAL: SEE NOTES

FINISH: SEE TABLE

DWN 09JUN2010 M.E. COWHER
CHK 10JUN2010 M.D. MORRISON
APVD 10JUN2010 M.D. MORRISON

PRODUCT SPEC -
APPLICATION SPEC -
WEIGHT -

CUSTOMER DRAWING

TE Connectivity

PRELIMINARY

NAME: RECEPTACLE ASSEMBLY WITH LIGHTPIPE AND HEAT SINK, 84 POSITION, CXP

SIZE	CAGE CODE	DRAWING NO	RESTRICTED TO
A2	00779	C-2149159	-

SCALE 1:1 SHEET 1 OF 5 REV 7

1471-9 (3/11)

Pro/ENGINEER DRAWING

THIS DRAWING IS UNPUBLISHED. RELEASED FOR PUBLICATION 20
© COPYRIGHT 20 BY - ALL RIGHTS RESERVED.

LOC	DIST
GP	00

REVISIONS

P	LTR	DESCRIPTION	DATE	DWN	APVD
	-	SEE SHEET 1	-	-	-

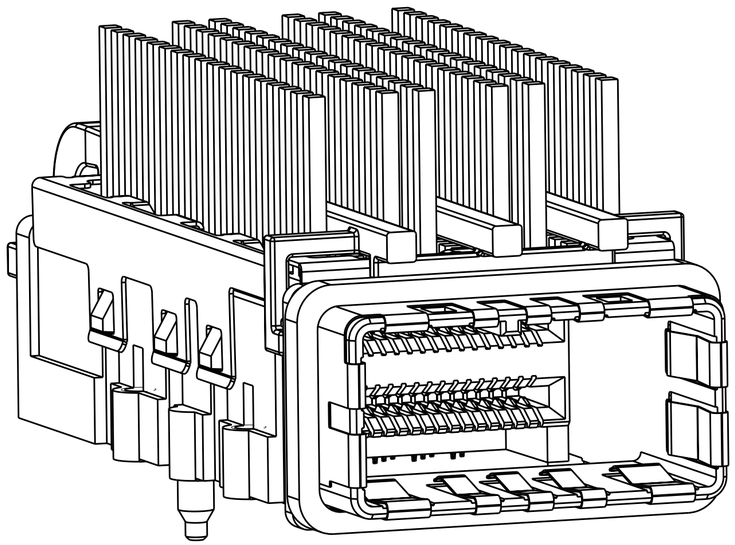

2149159-7
SCALE 4:1

1. MATERIALS:
   HOUSING - NICKEL PLATED ZINC ALLOY PER ASTM B 240
   EMI GASKET - SILVER PLATED URETHANE
   RECEPTACLE HOUSING - LCP, BLACK, UL 94V-O RATED
   CHICKLET - LCP, BLACK, UL 94V-O RATED
   CONTACT - PHOSPHOR BRONZE PER ASTM B 103
   EMI SPRING - COPPER ALLOY
   HEAT SINK - ALUMINUM
   CLIP, HEAT SINK - STAINLESS STEEL
   LIGHTPIPE - POLYCARBONATE, CLEAR

2. CONTACT FINISH:
   CONFORMS TO THE REQUIREMENTS OF TYCO ELECTRONICS PRODUCT SPECIFICATION 108-2426, BASED ON EIA/ECA-364-1000.01A, (CONTROLLED ENVIRONMENT APPLICATIONS) ON MATING INTERFACE, TIN ON NEEDLE EYE

3. NOTE DELETED

4. PCB THICKNESS = 1.57 MIN

5. FOR HOLE SIZE AND PLATINGS, SEE APPLICATION SPEC 114-13283

6. THE ENTIRE AREA OF THE CONNECTOR FOOTPRINT, INDICATED BY CROSSHATCHING, TO BE CONSIDERED THE KEEPOUT AREA FOR COMPONENTS AND SIGNAL TRACES, TOP SIDE ONLY, TOP SIDE TRACES ALLOWED WITHIN CONNECTOR HOLE PATTERN, CROSSHATCHING TO BE CONDUCTIVE

7. MOUNTING HARDWARE REQUIRED:
   M2x0.4 (4)
   MOUNTING SCREW LENGTH = BOARD THICKNESS PLUS 4mm MAX

8. COMPONENTS PACKAGED UNASSEMBLED

PRELIMINARY PART- NOT RELEASED FOR PRODUCTION

THIS DRAWING IS A CONTROLLED DOCUMENT.

DIMENSIONS: mm

TOLERANCES UNLESS OTHERWISE SPECIFIED:
0 PLC ±0.25
1 PLC ±0.25
2 PLC ±0.25
3 PLC ±0.25
4 PLC ±0.25
ANGLES ±-

MATERIAL: SEE NOTES
FINISH: SEE TABLE

DWN 09JUN2010 M.E. COWHER
CHK 10JUN2010 M.D. MORRISON
APVD 10JUN2010 M.D. MORRISON
PRODUCT SPEC -
APPLICATION SPEC -
WEIGHT -
CUSTOMER DRAWING

TE Connectivity

NAME: RECEPTACLE ASSEMBLY WITH LIGHTPIPE AND HEAT SINK, 84 POSITION, CXP

SIZE	CAGE CODE	DRAWING NO	RESTRICTED TO
A2	00779	C-2149159	-

SCALE 1:1 SHEET 2 OF 5 REV 7

1471-9 (3/11)

THIS DRAWING IS UNPUBLISHED. RELEASED FOR PUBLICATION 20
© COPYRIGHT 20 BY - ALL RIGHTS RESERVED.

LOC	DIST
GP	00

REVISIONS

P	LTR	DESCRIPTION	DATE	DWN	APVD
	-	SEE SHEET 1	-	-	-

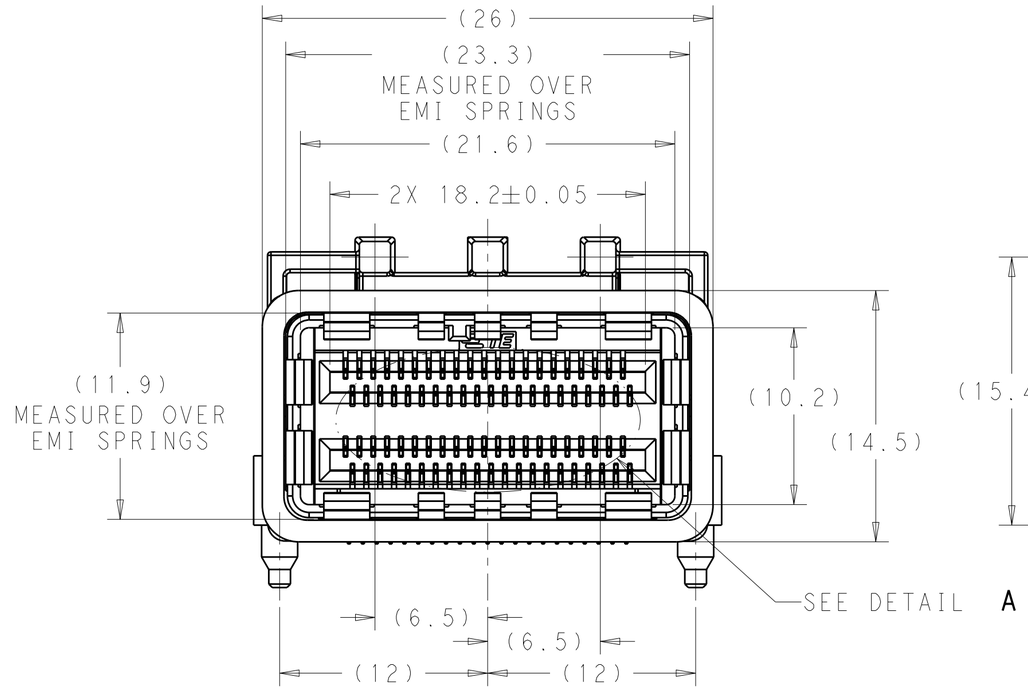

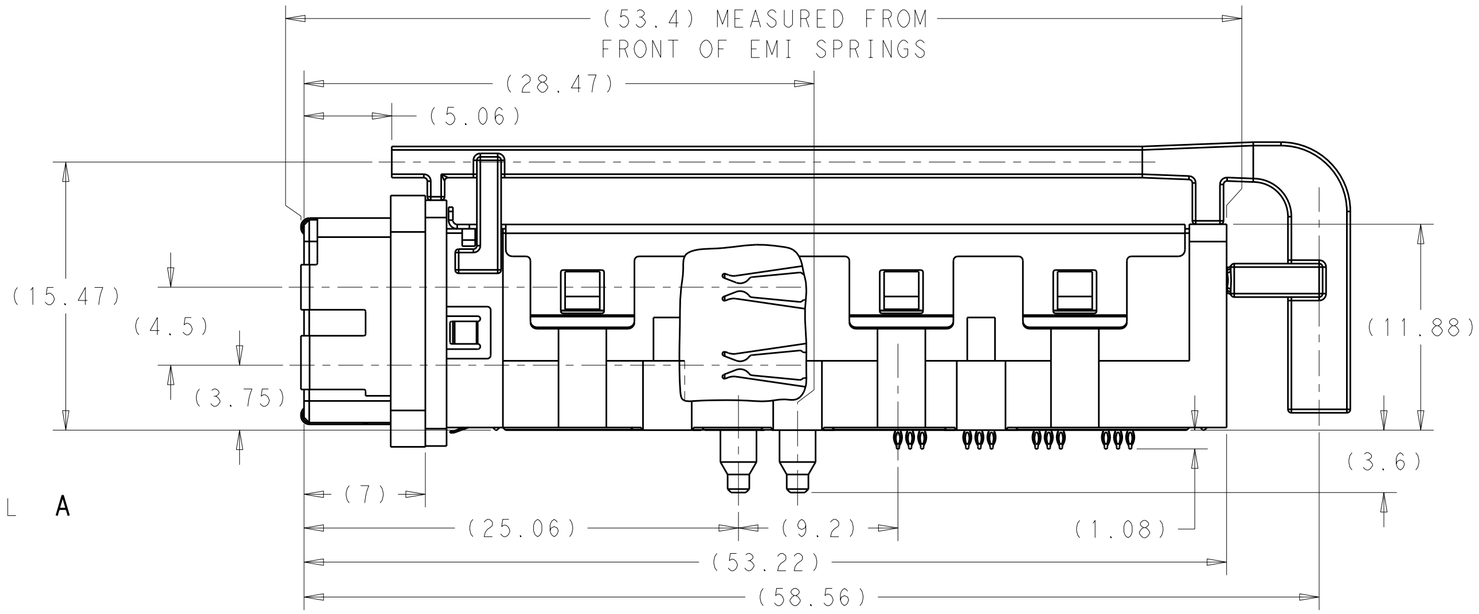

2149159-1
SCALE 4:1

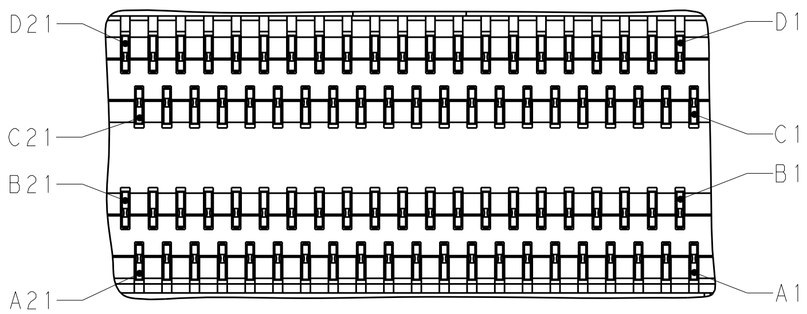

DETAIL A
RECOMMENDED PIN CALLOUT
SCALE 8:1

PRELIMINARY PART- NOT RELEASED FOR PRODUCTION

THIS DRAWING IS A CONTROLLED DOCUMENT.		DWN 09JUN2010 M.E. COWHER	TE Connectivity
DIMENSIONS: mm	TOLERANCES UNLESS OTHERWISE SPECIFIED: 0 PLC ±0.25, 1 PLC ±0.25, 2 PLC ±0.25, 3 PLC ±0.25, 4 PLC ±0.25, ANGLES ±-	CHK 10JUN2010 M.D. MORRISON	NAME RECEPTACLE ASSEMBLY WITH LIGHTPIPE AND HEAT SINK, 84 POSITION, CXP
		APVD 10JUN2010 M.D. MORRISON	
		PRODUCT SPEC -	
		APPLICATION SPEC -	SIZE A2 / CAGE CODE 00779 / DRAWING NO C-2149159 / RESTRICTED TO -
MATERIAL SEE NOTES	FINISH SEE TABLE	WEIGHT -	
		CUSTOMER DRAWING	SCALE 1:1 / SHEET 3 OF 5 / REV 7

1471-9 (3/11)

THIS DRAWING IS UNPUBLISHED. RELEASED FOR PUBLICATION 20
© COPYRIGHT 20 BY - ALL RIGHTS RESERVED.

LOC	DIST
GP	00

REVISIONS

P	LTR	DESCRIPTION	DATE	DWN	APVD
	-	SEE SHEET 1	-	-	-

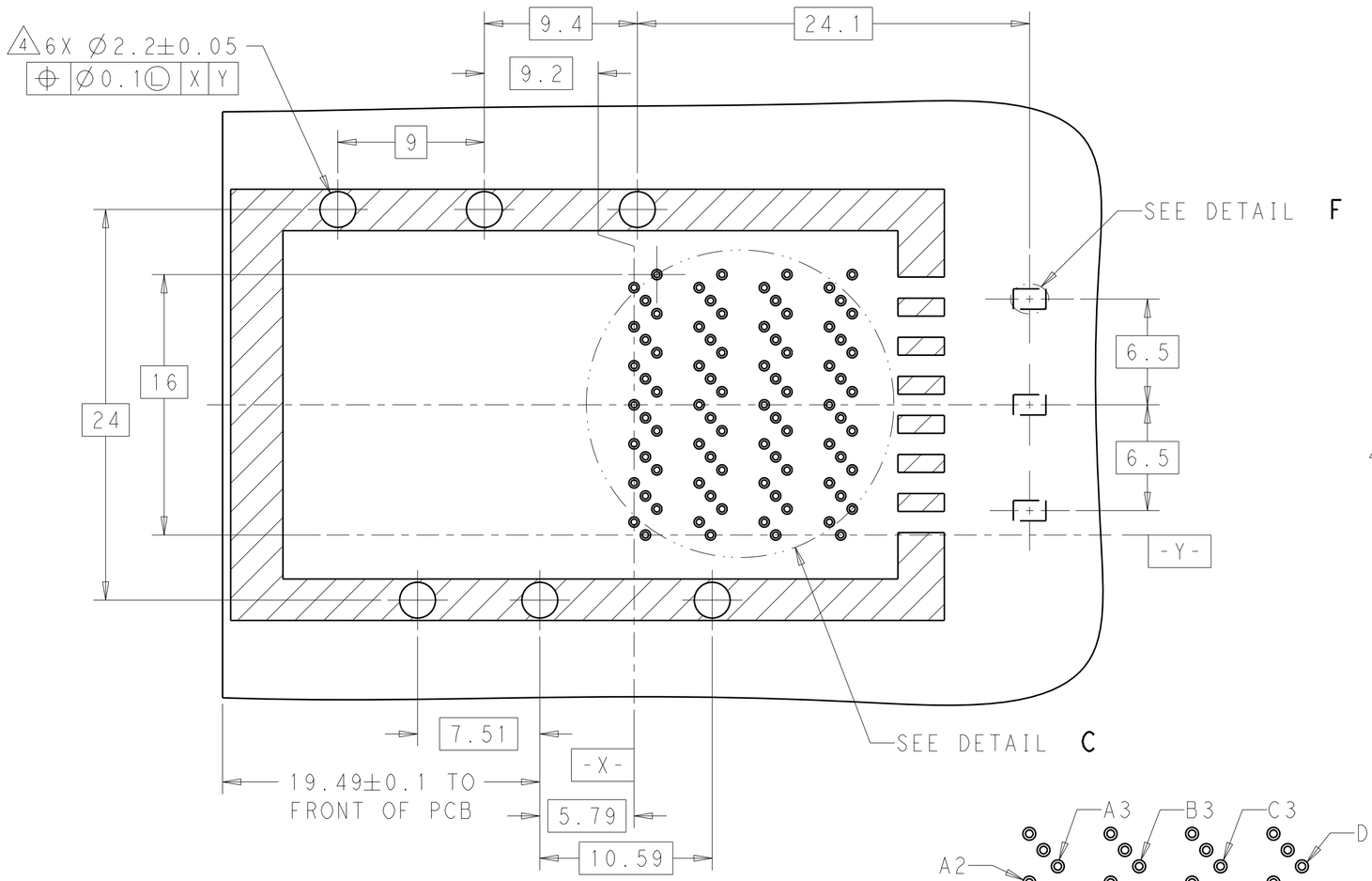

RECOMMENDED PCB LAYOUT
COMPONENT SIDE SHOWN
SCALE 4:1

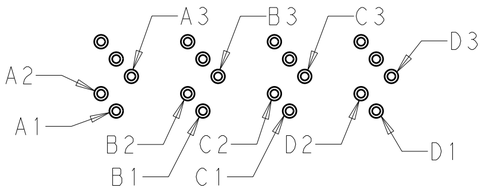

DETAIL D
PIN CALLOUT (TYPICAL)
SCALE 5:1

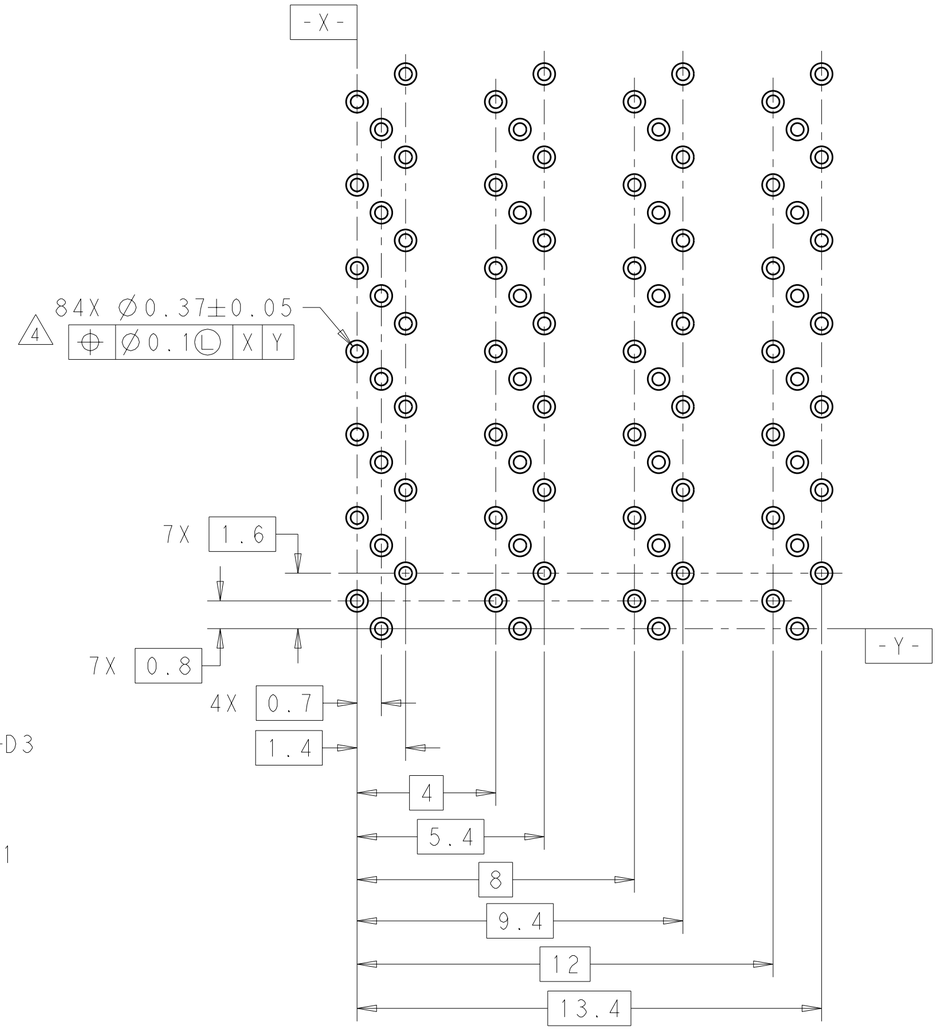

DETAIL C
RECOMMENDED CONNECTOR LAYOUT
SCALE 8:1

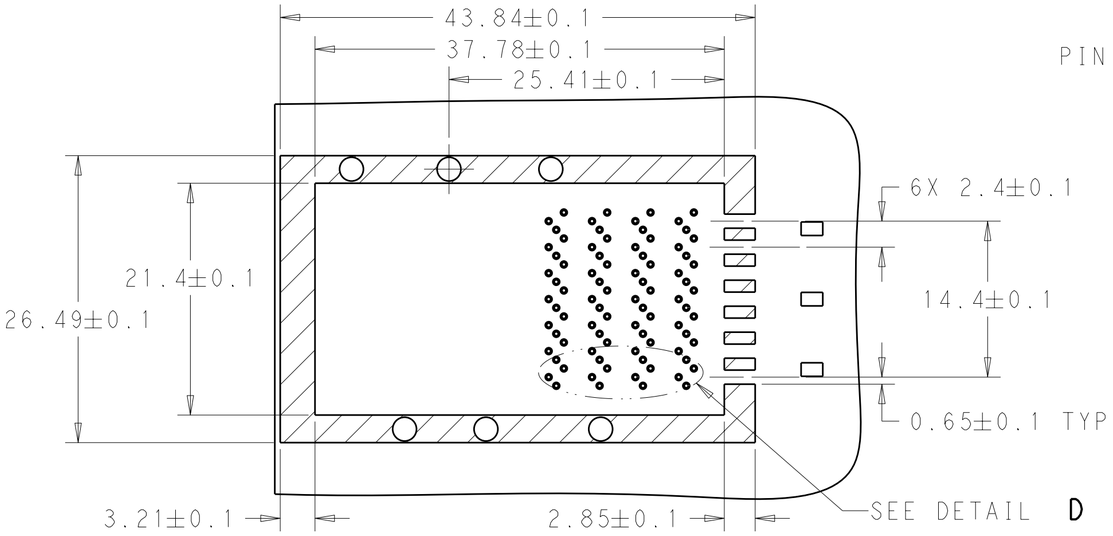

5 RECOMMENDED KEEPOUT AREA
SCALE 5:2

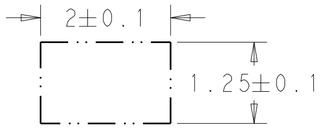

DETAIL F
3X INDIVIDUALLY
SCALE 15:1

PRELIMINARY PART- NOT RELEASED FOR PRODUCTION

THIS DRAWING IS A CONTROLLED DOCUMENT.

DIMENSIONS: mm

TOLERANCES UNLESS OTHERWISE SPECIFIED:

0 PLC	±0.25
1 PLC	±0.25
2 PLC	±0.25
3 PLC	±0.25
4 PLC	±0.25
ANGLES	±-

MATERIAL: SEE NOTES
FINISH: SEE TABLE

DWN 09JUN2010 M.E. COWHER
CHK 10JUN2010 M.D. MORRISON
APVD 10JUN2010 M.D. MORRISON
PRODUCT SPEC -
APPLICATION SPEC -
WEIGHT -
CUSTOMER DRAWING

TE Connectivity

NAME: RECEPTACLE ASSEMBLY WITH LIGHTPIPE AND HEAT SINK, 84 POSITION, CXP

SIZE	CAGE CODE	DRAWING NO	RESTRICTED TO
A2	00779	C-2149159	-

SCALE 1:1 SHEET 4 OF 5 REV 7

1471-9 (3/11)

THIS DRAWING IS UNPUBLISHED. RELEASED FOR PUBLICATION 20
© COPYRIGHT 20 BY - ALL RIGHTS RESERVED.

LOC	DIST
GP	00

REVISIONS

P	LTR	DESCRIPTION	DATE	DWN	APVD
	-	SEE SHEET 1	-	-	-

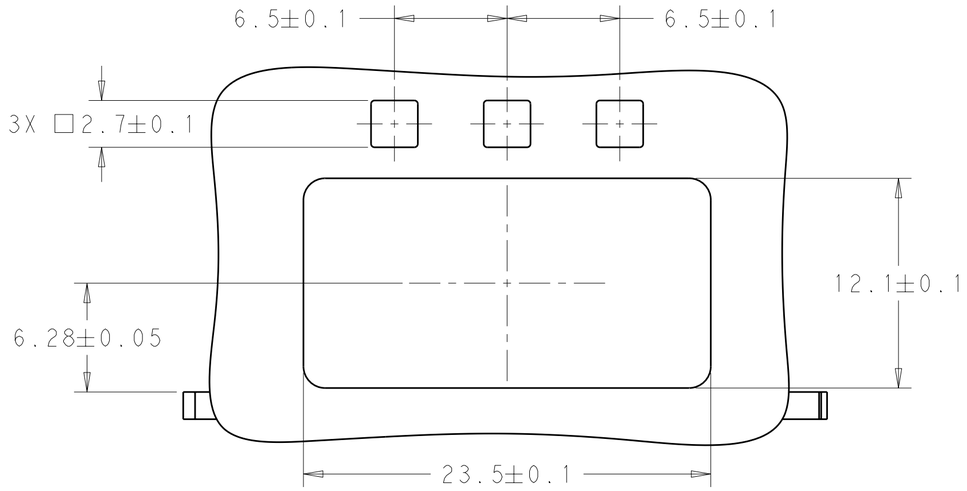

RECOMMENDED BRACKET CUT-OUT
SCALE 4:1

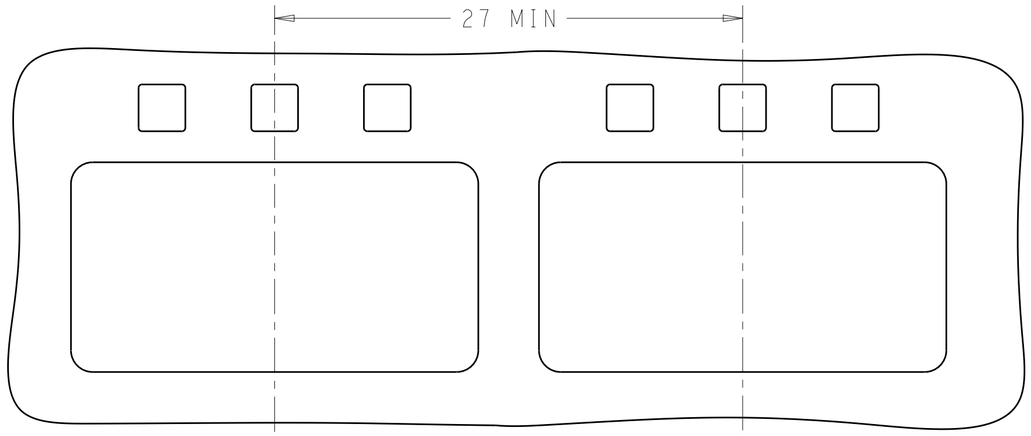

RECOMMENDED BRACKET CUT-OUT SPACING
SCALE 4:1

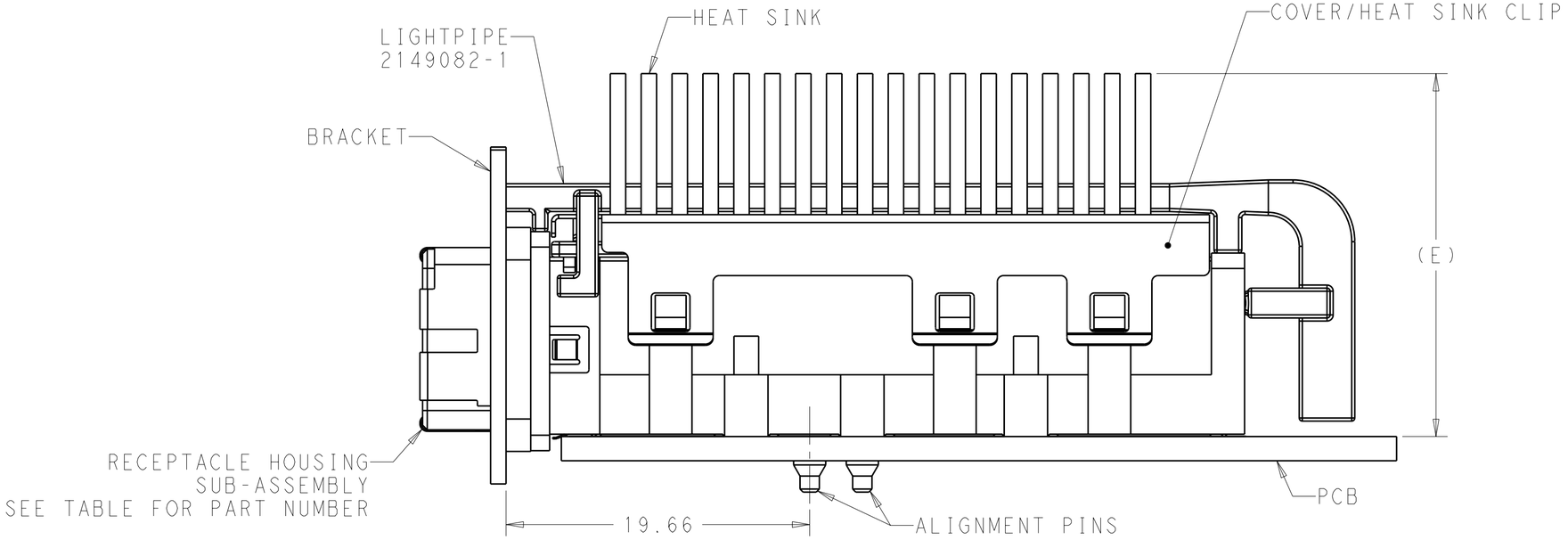

RECOMMENDED BRACKET LOCATION AND
HEIGHT OF HEAT SINK MEASURED FROM PCB
SCALE 4:1

PRELIMINARY PART- NOT RELEASED FOR PRODUCTION

THIS DRAWING IS A CONTROLLED DOCUMENT.

DIMENSIONS: mm

TOLERANCES UNLESS OTHERWISE SPECIFIED:
0 PLC ±0.25
1 PLC ±0.25
2 PLC ±0.25
3 PLC ±0.25
4 PLC ±0.25
ANGLES ±-

MATERIAL: SEE NOTES
FINISH: SEE TABLE

DWN 09JUN2010 M.E. COWHER
CHK 10JUN2010 M.D. MORRISON
APVD 10JUN2010 M.D. MORRISON
PRODUCT SPEC -
APPLICATION SPEC -
WEIGHT -

TE Connectivity

NAME: RECEPTACLE ASSEMBLY WITH LIGHTPIPE AND HEAT SINK, 84 POSITION, CXP

SIZE	CAGE CODE	DRAWING NO	RESTRICTED TO
A2	00779	C-2149159	-

CUSTOMER DRAWING | SCALE 1:1 | SHEET 5 OF 5 | REV 7

1471-9 (3/11)

Компания «ЭлектроПласт» предлагает заключение долгосрочных отношений при поставках импортных электронных компонентов на взаимовыгодных условиях!

Наши преимущества:

- Оперативные поставки широкого спектра электронных компонентов отечественного и импортного производства напрямую от производителей и с крупнейших мировых складов;
- Поставка более 17-ти миллионов наименований электронных компонентов;
- Поставка сложных, дефицитных, либо снятых с производства позиций;
- Оперативные сроки поставки под заказ (от 5 рабочих дней);
- Экспресс доставка в любую точку России;
- Техническая поддержка проекта, помощь в подборе аналогов, поставка прототипов;
- Система менеджмента качества сертифицирована по Международному стандарту ISO 9001;
- Лицензия ФСБ на осуществление работ с использованием сведений, составляющих государственную тайну;
- Поставка специализированных компонентов (Xilinx, Altera, Analog Devices, Intersil, Interpoint, Microsemi, Aeroflex, Peregrine, Syfer, Eurofarad, Texas Instrument, Miteq, Cobham, E2V, MA-COM, Hittite, Mini-Circuits,General Dynamics и др.);

Помимо этого, одним из направлений компании «ЭлектроПласт» является направление «Источники питания». Мы предлагаем Вам помощь Конструкторского отдела:

- Подбор оптимального решения, техническое обоснование при выборе компонента;
- Подбор аналогов;
- Консультации по применению компонента;
- Поставка образцов и прототипов;
- Техническая поддержка проекта;
- Защита от снятия компонента с производства.

Как с нами связаться

Телефон: 8 (812) 309 58 32 (многоканальный)
Факс: 8 (812) 320-02-42
Электронная почта: org@eplast1.ru
Адрес: 198099, г. Санкт-Петербург, ул. Калинина, дом 2, корпус 4, литера А.