Low Distortion Mixer

AD831

FEATURES
Doubly Balanced Mixer
Low Distortion
+24 dBm Third Order Intercept (IP3)
+10 dBm 1 dB Compression Point
Low LO Drive Required: –10 dBm
Bandwidth
500 MHz RF and LO Input Bandwidths
250 MHz Differential Current IF Output
DC to >200 MHz Single-Ended Voltage IF Output
Single- or Dual-Supply Operation
DC Coupled Using Dual Supplies
All Ports May Be DC Coupled
No Lower Frequency Limit—Operation to DC
User-Programmable Power Consumption

APPLICATIONS
High Performance RF/IF Mixer
Direct to Baseband Conversion
Image-Reject Mixers
I/Q Modulators and Demodulators

FUNCTIONAL BLOCK DIAGRAM

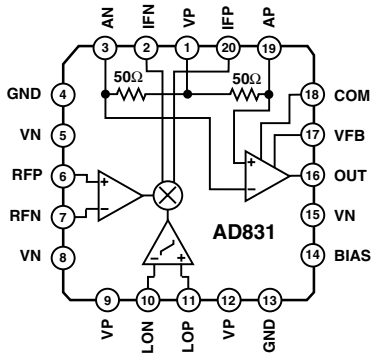

PRODUCT DESCRIPTION

The AD831 is a low distortion, wide dynamic range, monolithic mixer for use in such applications as RF to IF downconversion in HF and VHF receivers, the second mixer in DMR base stations, direct-to-baseband conversion, quadrature modulation and demodulation, and doppler shift detection in ultrasound imaging applications. The mixer includes an LO driver and a low noise output amplifier and provides both user-programmable power consumption and third order intercept point.

The AD831 provides a +24 dBm third order intercept point for –10 dBm LO power, thus improving system performance and reducing system cost compared to passive mixers, by eliminating the need for a high power LO driver and its attendant shielding and isolation problems.

The RF, IF, and LO ports may be dc or ac coupled when the mixer is operating from ±5 V supplies or ac coupled when operating from a single-supply of 9 V minimum. The mixer operates with RF and LO inputs as high as 500 MHz.

The mixer's IF output is available as either a differential current output or a single-ended voltage output. The differential output is from a pair of open collectors and may be ac coupled via a transformer or capacitor to provide a 250 MHz output bandwidth. In downconversion applications, a single capacitor connected across these outputs implements a low-pass filter to reduce harmonics directly at the mixer core, simplifying output filtering. When building a quadrature-amplitude modulator or image reject mixer, the differential current outputs of two AD831s may be summed by connecting them together.

An integral low noise amplifier provides a single-ended voltage output and can drive such low impedance loads as filters, 50 Ω amplifier inputs, and A/D converters. Its small signal bandwidth exceeds 200 MHz. A single resistor connected between pins OUT and FB sets its gain. The amplifier's low dc offset allows its use in such direct-coupled applications as direct-to-baseband conversion and quadrature-amplitude demodulation.

The mixer's SSB noise figure is 10.3 dB at 70 MHz using its output amplifier and optimum source impedance. Unlike passive mixers, the AD831 has no insertion loss and does not require an external diplexer or passive termination.

A programmable-bias feature allows the user to reduce power consumption, with a reduction in the 1 dB compression point and third-order intercept. This permits a tradeoff between dynamic range and power consumption. For example, the AD831 may be used as a second mixer in cellular and two-way radio base stations at reduced power while still providing a substantial performance improvement over passive solutions.

PRODUCT HIGHLIGHTS

1. –10 dBm LO Drive for a +24 dBm Output Referred Third Order Intercept Point
2. Single-Ended Voltage Output
3. High Port-to-Port Isolation
4. No Insertion Loss
5. Single- or Dual-Supply Operation
6. 10.3 dB Noise Figure

REV. C

Information furnished by Analog Devices is believed to be accurate and reliable. However, no responsibility is assumed by Analog Devices for its use, nor for any infringements of patents or other rights of third parties that may result from its use. No license is granted by implication or otherwise under any patent or patent rights of Analog Devices. Trademarks and registered trademarks are the property of their respective companies.

One Technology Way, P.O. Box 9106, Norwood, MA 02062-9106, U.S.A.
Tel: 781/329-4700 **www.analog.com**
Fax: 781/326-8703 **© 2003 Analog Devices, Inc. All rights reserved.**

AD831—SPECIFICATIONS

(T_A = +25°C and $\pm V_S$ = ±5 V unless otherwise noted; all values in dBm assume 50 Ω load.)

Parameter	Conditions	Min	Typ	Max	Unit
RF INPUT					
Bandwidth	–10 dBm Signal Level, IP3 ≥ +20 dBm 10.7 MHz IF and High Side Injection See Figure 1		400		MHz
1 dB Compression Point			10		dBm
Common-Mode Range				±1	V
Bias Current	DC Coupled		160	500	µA
DC Input Resistance	Differential or Common Mode		1.3		kΩ
Capacitance			2		pF
IF OUTPUT					
Bandwidth	Single-Ended Voltage Output, –3 dB Level = 0 dBm, R_L = 100 Ω		200		MHz
Conversion Gain	Terminals OUT and VFB Connected		0		dB
Output Offset Voltage	DC Measurement; LO Input Switched ±1	–40	+15	+40	mV
Slew Rate			300		V/µs
Output Voltage Swing	R_L = 100 Ω, Unity Gain		±1.4		V
Short Circuit Current			75		mA
LO INPUT					
Bandwidth	–10 dBm Input Signal Level 10.7 MHz IF and High Side Injection		400		MHz
Maximum Input Level		–1		+1	V
Common-Mode Range		–1		+1	V
Minimum Switching Level	Differential Input Signal		200		mV p-p
Bias Current	DC Coupled		17	50	µA
Resistance	Differential or Common Mode		500		Ω
Capacitance			2		pF
ISOLATION BETWEEN PORTS					
LO-to-RF	LO = 100 MHz, R_S = 50 Ω, 10.7 MHz IF		70		dB
LO-to-IF	LO = 100 MHz, R_S = 50 Ω, 10.7 MHz IF		30		dB
RF-to-IF	RF = 100 MHz, R_S = 50 Ω, 10.7 MHz IF		45		dB
DISTORTION AND NOISE	LO = –10 dBm, f = 100 MHz, IF = 10.7 MHz				
Third Order Intercept	Output Referred, ±100 mV LO Input		24		dBm
Second Order Intercept	Output Referred, ±100 mV LO Input		62		dBm
1 dB Compression Point	R_L = 100 Ω, R_{BIAS} = ∞		10		dBm
Noise Figure, SSB	Matched Input, RF = 70 MHz, IF = 10.7 MHz		10.3		dB
	Matched Input, RF = 150 MHz, IF = 10.7 MHz		14		dB
POWER SUPPLIES					
Recommended Supply Range	Dual Supply	±4.5		±5.5	V
	Single Supply	9		11	V
Quiescent Current*	For Best Third Order Intercept Point Performance BIAS Pin Open Circuited		100	125	mA

*Quiescent current is programmable.

Specifications subject to change without notice.

ABSOLUTE MAXIMUM RATINGS[1]

Supply Voltage $\pm V_S$ . . . . . ±5.5V
Input Voltages
  RFHI, RFLO . . . . . ±3V
  LOHI, LOLO . . . . . ±1V
Internal Power Dissipation[2] . . . . . 1200 mW
Operating Temperature Range
  AD831A . . . . . –40°C to +85°C
Storage Temperature Range . . . . . –65°C to +150°C
Lead Temperature Range (Soldering 60 sec) . . . . . 300°C

NOTES

[1] Stresses above those listed under Absolute Maximum Ratings may cause permanent damage to the device. This is a stress rating only and functional operation of the device at these or any other conditions above those indicated in the operational section of this specification is not implied. Exposure to absolute maximum rating conditions for extended periods may affect device reliability.

[2] Thermal Characteristics:
20-Lead PLCC Package: θ_{JA} = 110°C/W; θ_{JC} = 20°C/W.
Note that the θ_{JA} = 110°C/W value is for the package measured while suspended in still air; mounted on a PC board, the typical value is θ_{JA} = 90°C/W due to the conduction provided by the AD831's package being in contact with the board, which serves as a heat sink.

ORDERING GUIDE

Model	Temperature Range	Package Description	Package Option
AD831AP	–40°C to +85°C	20-Lead PLCC	P-20A
AD831AP-REEL7	–40°C to +85°C	20-Lead PLCC	P-20A
AD831AP-EB		Evaluation Board	

PIN CONFIGURATION
20-Lead PLCC

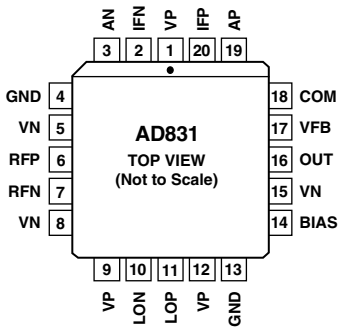

PIN DESCRIPTION

Pin No.	Mnemonic	Description
1	VP	Positive Supply Input
2	IFN	Mixer Current Output
3	AN	Amplifier Negative Input
4	GND	Ground
5	VN	Negative Supply Input
6	RFP	RF Input
7	RFN	RF Input
8	VN	Negative Supply Input
9	VP	Positive Supply Input
10	LON	Local Oscillator Input
11	LOP	Local Oscillator Input
12	VP	Positive Supply Input
13	GND	Ground
14	BIAS	Bias Input
15	VN	Negative Supply Input
16	OUT	Amplifier Output
17	VFB	Amplifier Feedback Input
18	COM	Amplifier Output Common
19	AP	Amplifier Positive Input
20	IFP	Mixer Current Output

CAUTION

ESD (electrostatic discharge) sensitive device. Electrostatic charges as high as 4000V readily accumulate on the human body and test equipment and can discharge without detection. Although the AD831 features proprietary ESD protection circuitry, permanent damage may occur on devices subjected to high energy electrostatic discharges. Therefore, proper ESD precautions are recommended to avoid performance degradation or loss of functionality.

AD831–Typical Performance Characteristics

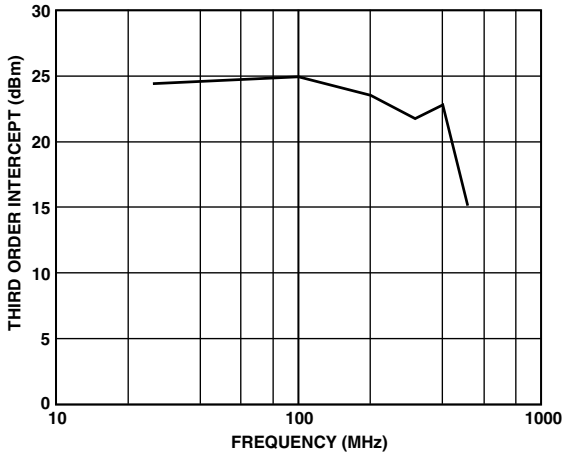

TPC 1. Third Order Intercept vs. Frequency, IF Held Constant at 10.7 MHz

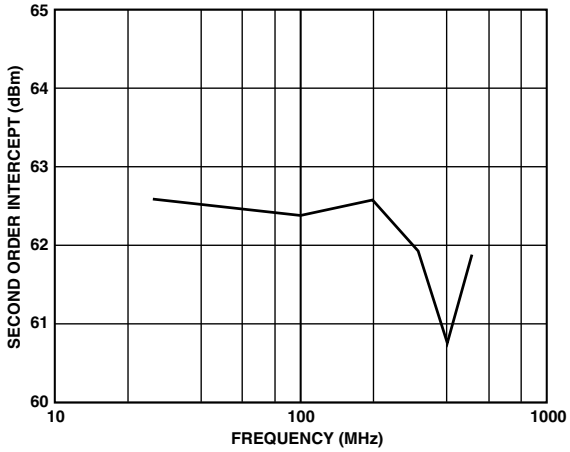

TPC 4. Second Order Intercept vs. Frequency

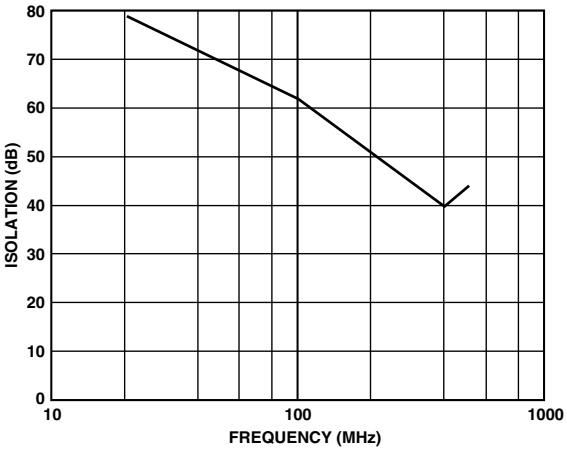

TPC 2. IF-to-RF Isolation vs. Frequency

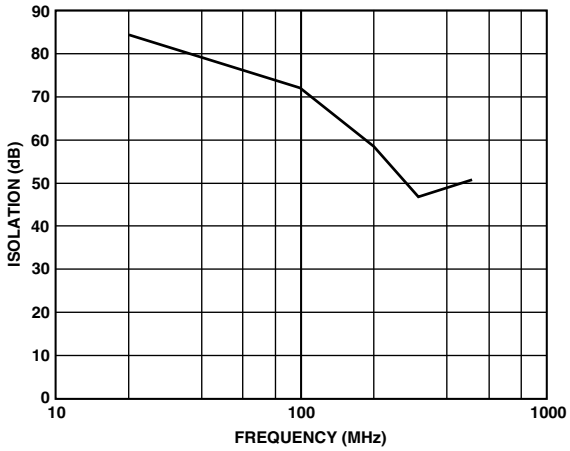

TPC 5. LO-to-RF Isolation vs. Frequency

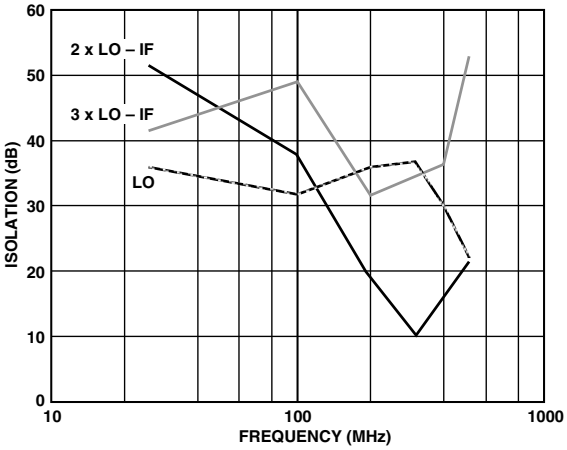

TPC 3. LO-to-IF Isolation vs. Frequency

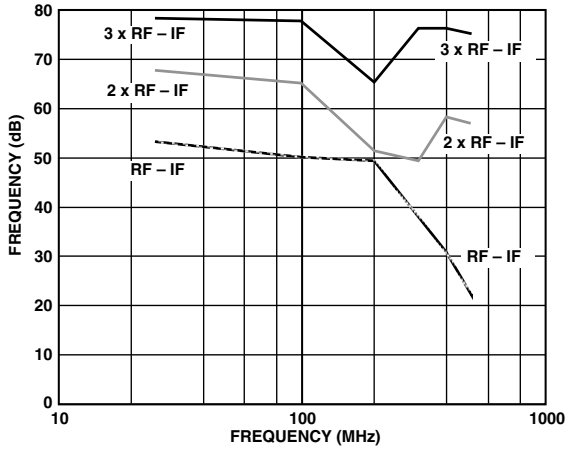

TPC 6. RF-to-IF Isolation vs. Frequency

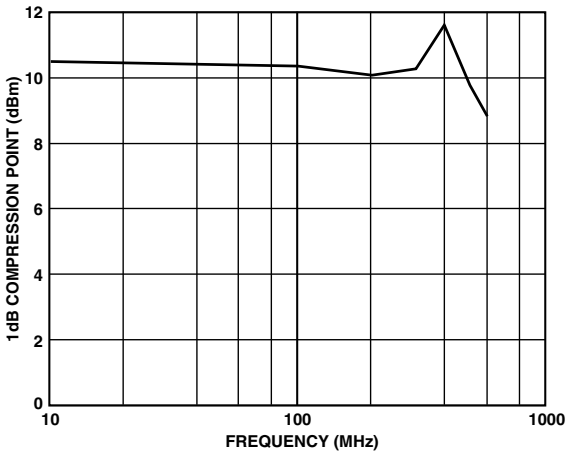

TPC 7. 1 dB Compression Point vs. Frequency, Gain = 1

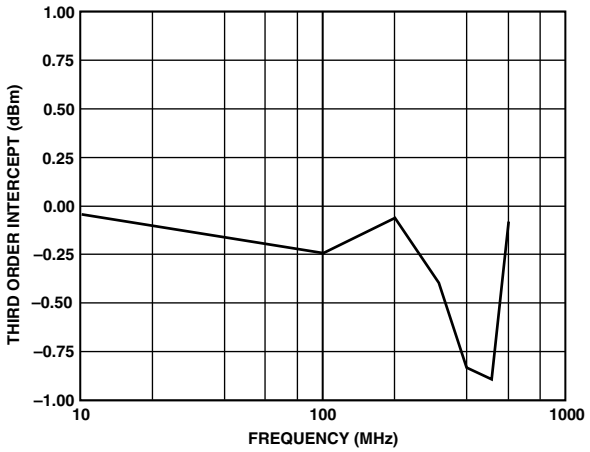

TPC 10. Gain Error vs. Frequency, Gain = 1

TPC 8. 1 dB Compression Point vs. RF Input, Gain = 2

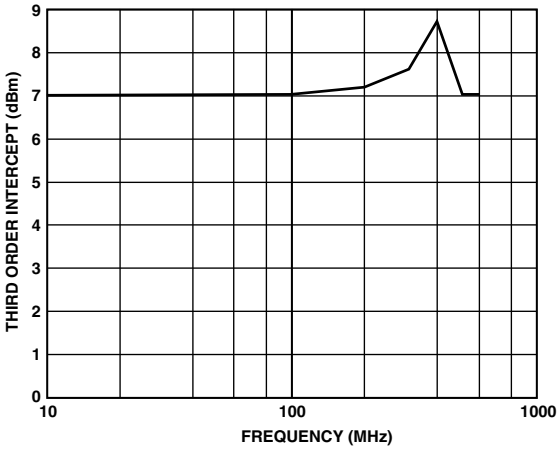

TPC 11. 1 dB Compression Point vs. Frequency, Gain = 4

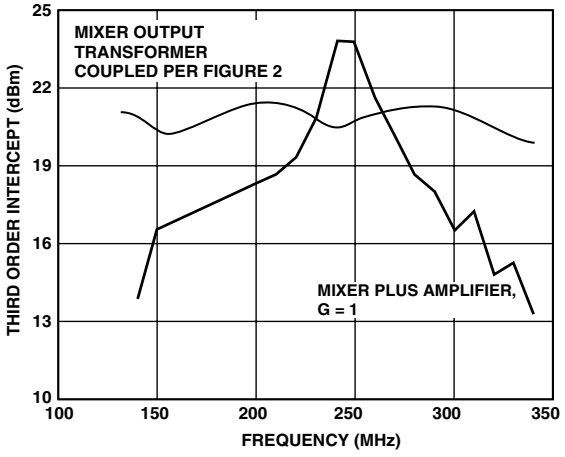

TPC 9. Third Order Intercept vs. Frequency, LO Held Constant at 241 MHz

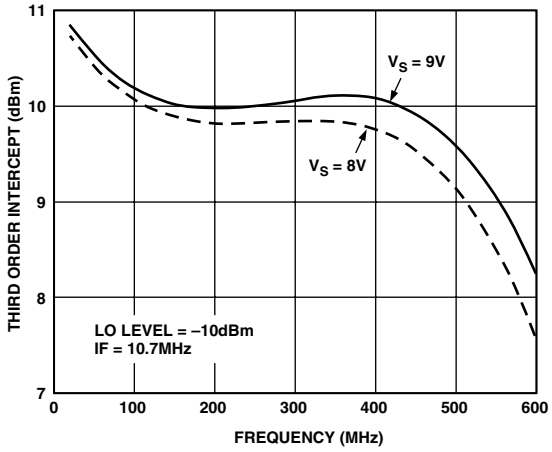

TPC 12. Input 1 dB Compression Point vs. Frequency, Gain = 1, 9 V Single Supply

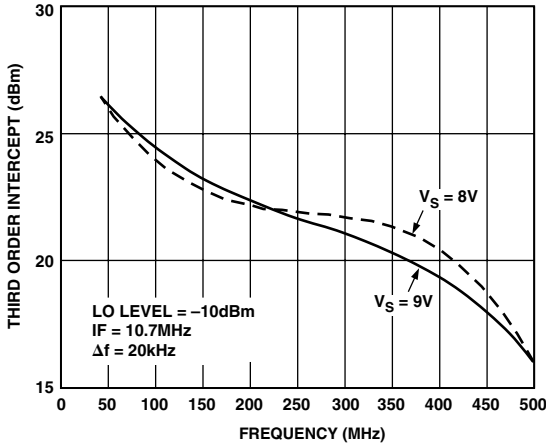

TPC 13. Input Third Order Intercept, 9 V Single Supply

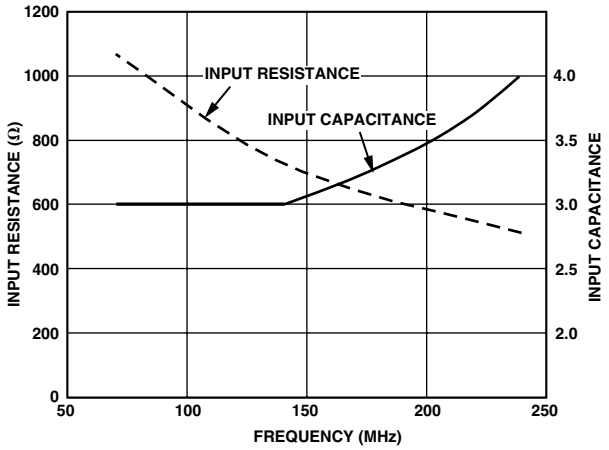

TPC 15. Input Impedance vs. Frequency, $Z_{IN} = R \| C$

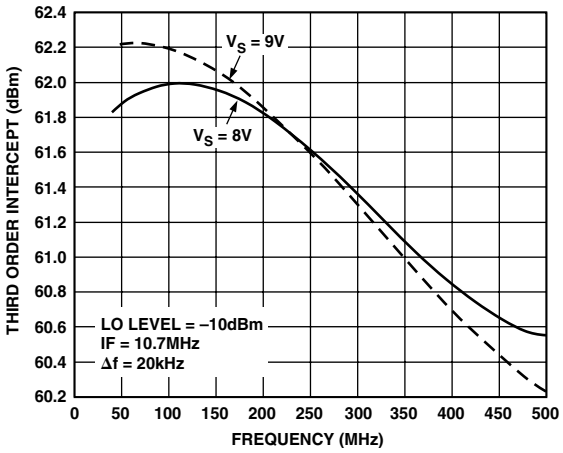

TPC 14. Input Second Order Intercept, 9 V Single Supply

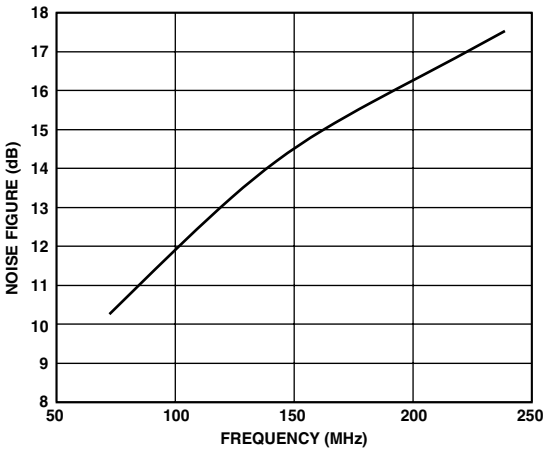

TPC 16. Noise Figure vs. Frequency, Matched Input

THEORY OF OPERATION

The AD831 consists of a mixer core, a limiting amplifier, a low noise output amplifier, and a bias circuit (Figure 1).

The mixer's RF input is converted into differential currents by a highly linear, Class A voltage-to-current converter, formed by transistors Q1, Q2 and resistors R1, R2. The resulting currents drive the differential pairs Q3, Q4 and Q5, Q6. The LO input is through a high gain, low noise limiting amplifier that converts the –10 dBm LO input into a square wave. This square wave drives the differential pairs Q3, Q4 and Q5, Q6 and produces a high level output at IFP and IFN—consisting of the sum and difference frequencies of the RF and LO inputs—and a series of lower level outputs caused by odd harmonics of the LO frequency mixing with the RF input.

An on-chip network supplies the bias current to the RF and LO inputs when these are ac-coupled; this network is disabled when the AD831 is dc-coupled.

When the integral output amplifier is used, pins IFN and IFP are connected directly to pins AFN and AFP; the on-chip load resistors convert the output current into a voltage that drives the output amplifier. The ratio of these load resistors to resistors R1, R2 provides nominal unity gain (0 dB) from RF-to-IF. The expression for the gain, in decibels, is

$$G_{dB} = 20\ \log_{10}\left(\frac{4}{\pi}\right)\left(\frac{1}{2}\right)\left(\frac{\pi}{2}\right) \quad (1)$$

where:

$\frac{4}{\pi}$ is the amplitude of the fundamental component of a squarewave.

$\frac{1}{2}$ is the conversion loss.

$\frac{\pi}{2}$ is the small signal dc gain of the AD831 when the LO input is driven fully positive or negative.

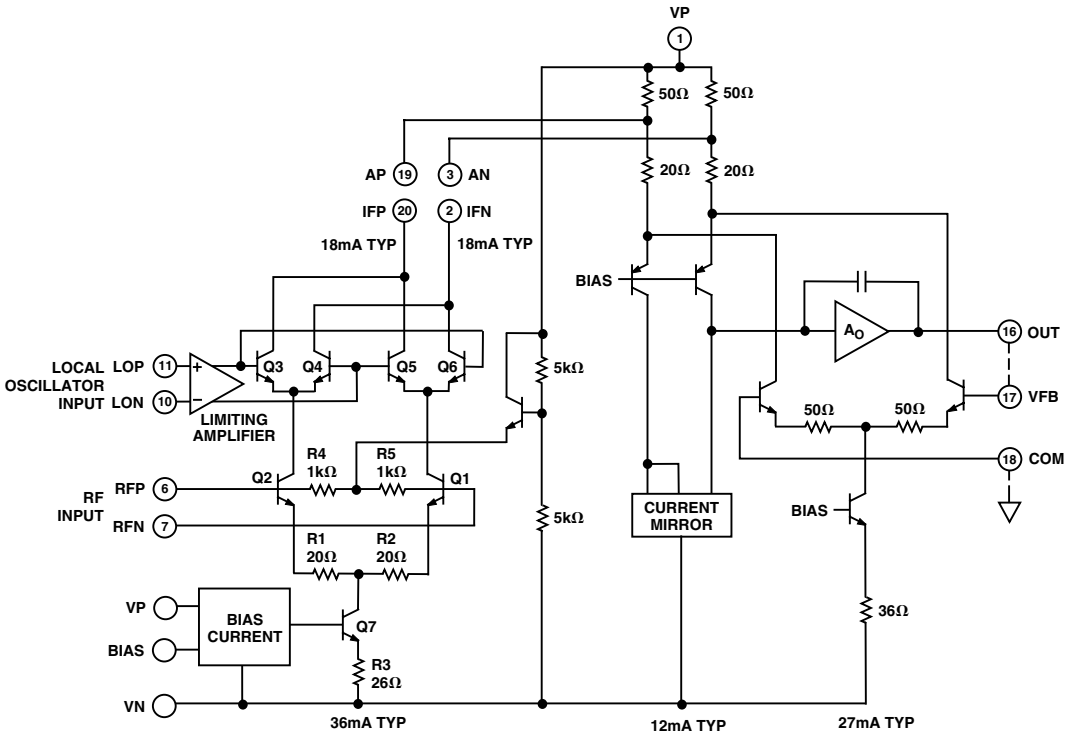

Figure 1. Simplified Schematic Diagram

The mixer has two open-collector outputs (differential currents) at pins IFN and IFP. These currents may be used to provide nominal unity RF to IF gain by connecting a center-tapped transformer (1:1 turns ratio) to pins IFN and IFP as shown in Figure 2.

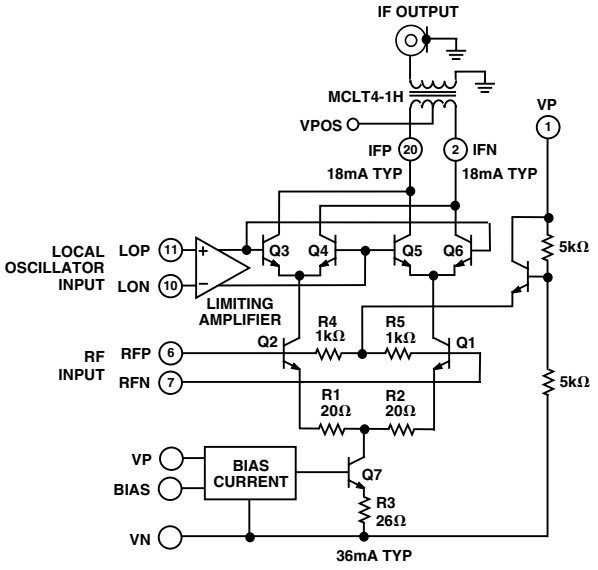

Figure 2. Connections for Transformer Coupling to the IF Output

Programming the Bias Current

Because the AD831's RF port is a Class-A circuit, the maximum RF input is proportional to the bias current. This bias current may be reduced by connecting a resistor from the BIAS pin to the positive supply (Figure 3). For normal operation, the BIAS pin is left unconnected. For lowest power consumption, the BIAS pin is connected directly to the positive supply. The range of adjustment is 100 mA for normal operation to 45 mA total current at minimum power consumption.

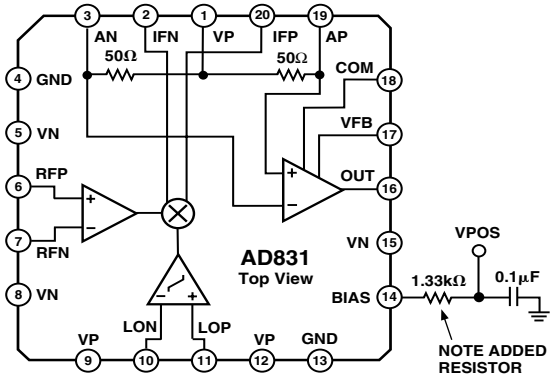

Figure 3. Programming the Quiescent Current

Low-Pass Filtering

A simple low-pass filter may be added between the mixer and the output amplifier by shunting the internal resistive loads (an equivalent resistance of about 14 Ω with a tolerance of 20%) with external capacitors; these attenuate the sum component in a downconversion application (Figure 4). The corner frequency of this one-pole low-pass filter ($f = (2 \pi RC_F)^{-1}$) should be placed about an octave above the difference frequency IF. Thus, for a 70 MHz IF, a –3 dB frequency of 140 MHz might be chosen, using $C_F = (2 \times \pi \times 14\ \Omega \times 140\ \text{MHz})^{-1} \approx 82$ pF, the nearest standard value.

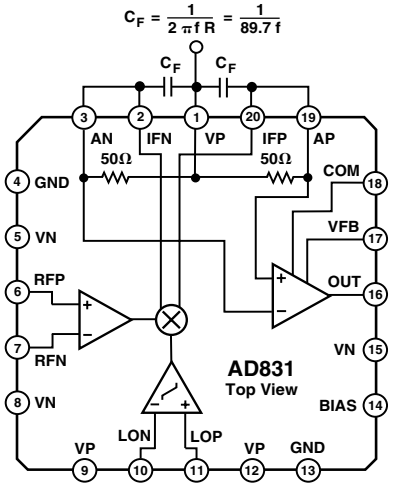

Figure 4. Low-Pass Filtering Using External Capacitors

Using the Output Amplifier

The AD831's output amplifier converts the mixer core's differential current output into a single-ended voltage and provides an output as high as ±1 V peak into a 50 V load (+10 dBm). For unity gain operation (Figure 5), the inputs AN and AP connect to the open-collector outputs of the mixer's core and OUT connects to VFB.

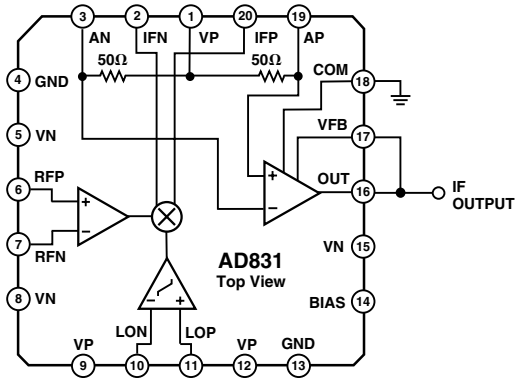

Figure 5. Output Amplifier Connected for Unity Gain Operation

For gains other than unity, the amplifier's output at OUT is connected via an attenuator network to VFB; this determines the overall gain. Using resistors R1 and R2 (Figure 6), the gain setting expression is

$$G_{dB} = 20\ \log_{10}\left(\frac{R1+R2}{R2}\right) \quad (2)$$

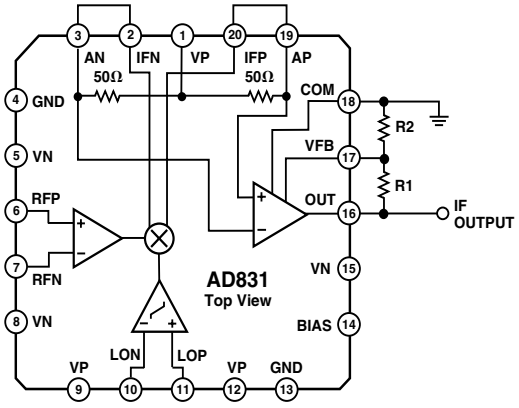

Figure 6. Output Amplifier Feedback Connections for Increasing Gain

Driving Filters

The output amplifier can be used for driving reverse-terminated loads. When driving an IF band-pass filter (BPF), for example, proper attention must be paid to providing the optimal source and load terminations so as to achieve the specified filter response. The AD831's wideband highly linear output amplifier affords an opportunity to increase the RF to IF gain to compensate for a filter's insertion and termination losses.

Figure 7 indicates how the output amplifier's low impedance (voltage source) output can drive a doubly terminated band-pass filter. The typical 10 dB of loss (4 dB of insertion loss and 6 dB due to the reverse-termination) be made up by the inclusion of a feedback network that increases the gain of the amplifier by 10 dB (×3.162). When constructing a feedback circuit, the signal path between OUT and VFB should be as short as possible.

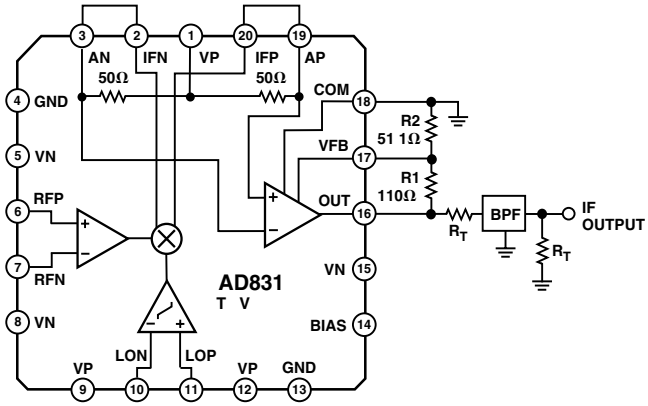

Figure 7. Connections for Driving a Doubly Terminated Band-Pass Filter

Higher gains can be achieved, using different resistor ratios, but with concomitant reduction in the bandwidth of this amplifier (Figure 8). Note also that the Johnson noise of these gain setting resistors, as well as that of the BPF terminating resistors, is ultimately reflected back to the mixer's input; thus they should be as small as possible, consistent with the permissible loading on the amplifier's output.

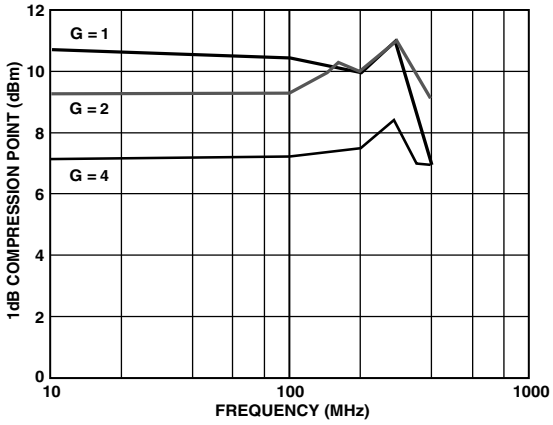

Figure 8. Output Amplifier 1 dB Compression Point for Gains of 1, 2, and 4 (Gains of 0 dB, 6 dB, and 12 dB, Respectively)

APPLICATIONS

Careful component selection, circuit layout, power supply dc coupling, and shielding are needed to minimize the AD831's susceptibility to interference from radio and TV stations, etc. In bench evaluation, we recommend placing all of the components in a shielded box and using feedthrough decoupling networks for the supply voltage.

Circuit layout and construction are also critical, since stray capacitances and lead inductances can form resonant circuits and are a potential source of circuit peaking, oscillation, or both.

Dual-Supply Operation

Figure 9 shows the connections for dual-supply operation. Supplies may be as low as ±4.5 V but should be no higher than ±5.5 V, due to power dissipation.

The RF input to the AD831 is shown connected by an impedance matching network for an assumed source impedance of 50 Ω. TPC 15 shows the input impedance of the AD831 plotted vs. frequency. The input circuit can be modeled as a resistance in parallel with a capacitance. The 82 pF capacitors (C_F) connected from IFN and IFP to VP provide a low-pass filter with a cutoff frequency of approximately 140 MHz in down-conversion applications (see the Theory of Operation section for more details). The LO input is connected single-ended because the limiting amplifier provides a symmetric drive to the mixer. To minimize intermodulation distortion, connect pins OUT and VFB by the shortest possible path. The connections shown are for unity-gain operation.

At LO frequencies less than 100 MHz, the AD831's LO power may be as low as –20 dBm for satisfactory operation. Above 100 MHz, the specified LO power of –10 dBm must be used.

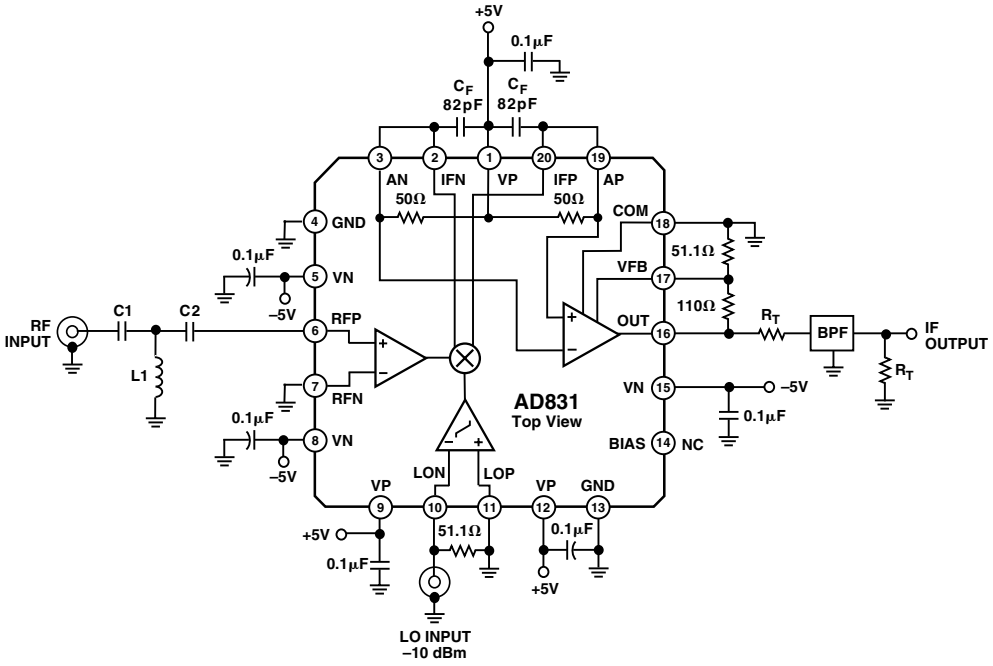

Figure 9. Connections for ±5 V Dual-Supply Operation Showing Impedance Matching Network and Gain of 2 for Driving Reverse-Terminated IF Filter

Single-Supply Operation

Figure 10 is similar to the dual-supply circuit in Figure 9. Supplies may be as low as 9 V but should not be higher than 11 V, due to power dissipation. As in Figure 9, both the RF and LO ports are driven single-ended and terminated.

In single-supply operation, the COM terminal is the "ground" reference for the output amplifier and must be biased to half the supply voltage, which is done by resistors R1 and R2. The OUT pin must be ac-coupled to the load.

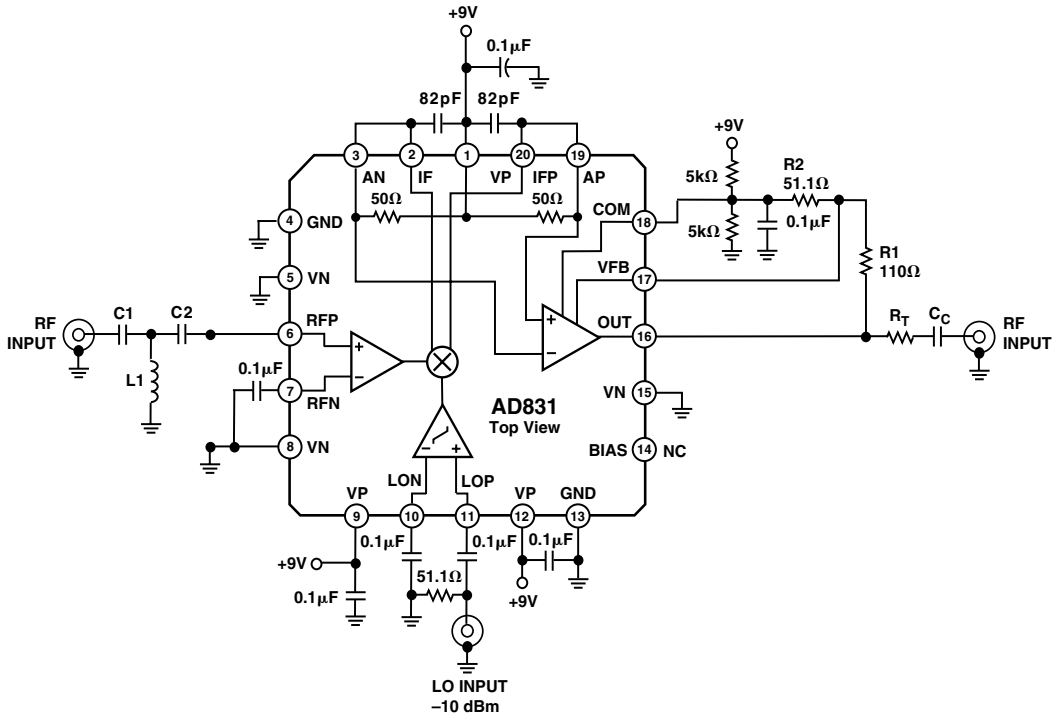

Figure 10. Connections for +9 V Single-Supply Operation

Connections Quadrature Demodulation

Two AD831 mixers may have their RF inputs connected in parallel and have their LO inputs driven in phase quadrature (Figure 11) to provide demodulated in-phase (I) and quadrature (Q) outputs. The mixers' inputs may be connected in parallel and a single termination resistor used if the mixers are located in close proximity on the PC board.

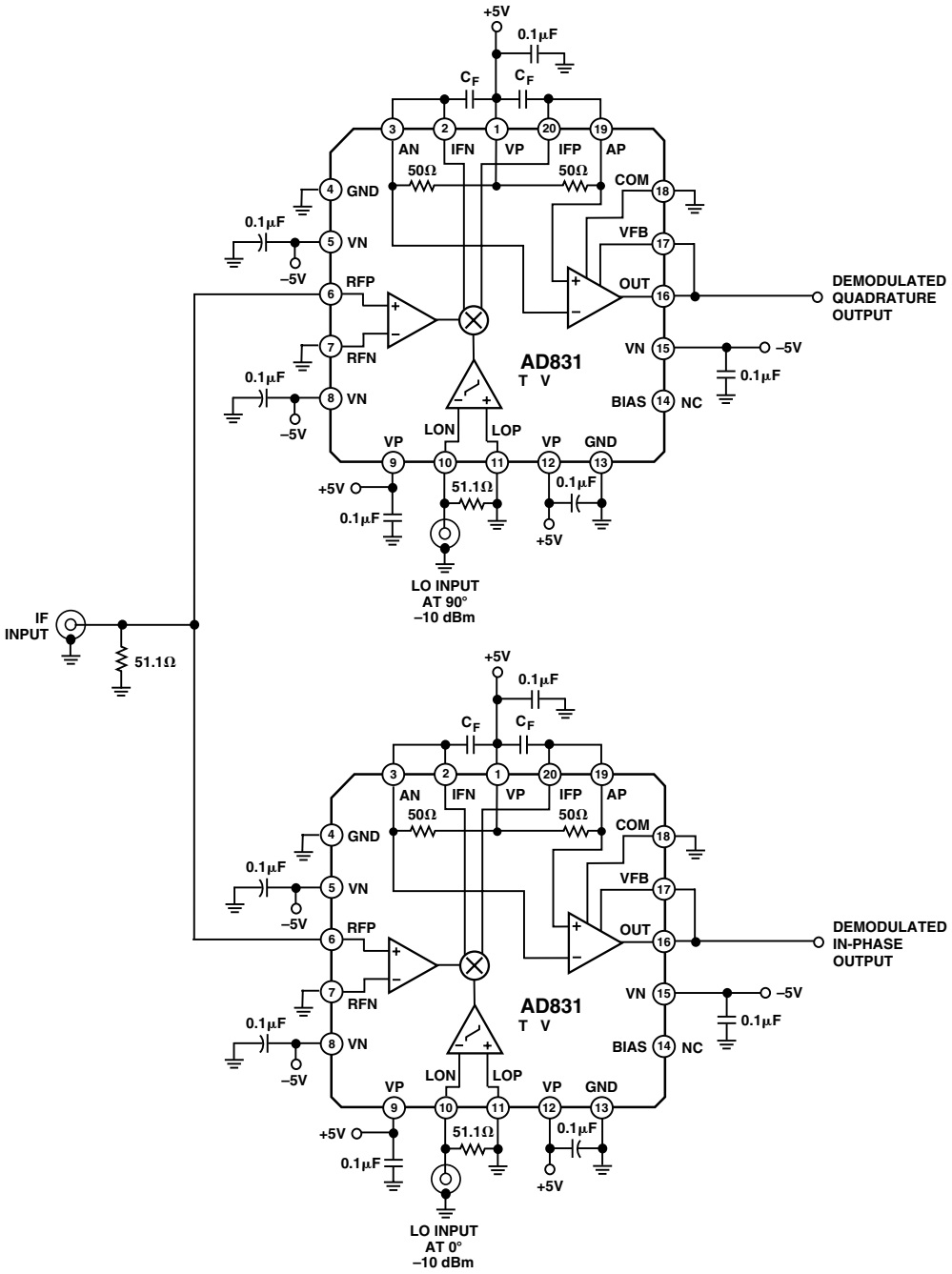

Figure 11. Connections for Quadrature Demodulation

Table I. AD831 Mixer Table, ±4.5 V Supplies, LO = –9 dBm

LO Level –9.0 dBm, LO Frequency 130.7 MHz, Data File imdTB10771
RF Level 0.0 dBm, RF Frequency 120 MHz
Temperature Ambient
Dut Supply ±4.50 V
VPOS Current 90 mA
VNEG Current 91 mA

Intermodulation table RF harmonics (rows) × LO harmonics (columns).
First row absolute value of nRF – mLO, and second row is the sum.

	0	1	2	3	4	5	6	7
0		–32.7 –32.7	–35.7 –35.7	–21.1 –21.1	–11.6 –11.6	–19.2 –19.2	–35.1 –35.1	–41.9 –41.9
1	–31.6 –31.6	0.0 –28.5	–37.2 –26.7	–41.5 –28.0	–30.4 –27.2	–34.3 –33.2	–25.2 –34.3	–40.1 –44.8
2	–45.3 –45.3	–48.2 –42.4	–39.4 –49.4	–57.6 –42.5	–44.9 –51.1	–42.4 –46.2	–40.2 –58.1	–40.2 –61.6
3	–54.5 –54.5	–57.1 –65.5	–57.5 –46.0	–50.6 –63.7	–62.6 –60.6	–55.8 –69.6	–59.7 –72.7	–55.2 –73.5
4	–67.1 –67.1	–63.1 –53.6	–69.9 –72.9	–69.9 –71.2	–69.6 –70.1	–74.1 –72.6	–69.7 –73.5	–58.6 –72.7
5	–53.5 –53.5	–62.6 –68.4	–73.8 –70.8	–72.3 –72.8	–70.7 –73.4	–71.1 –73.2	–74.3 –73.3	–73.0 –72.5
6	–73.6 –73.6	–57.7 –73.5	–68.6 –72.7	–73.1 –73.5	–73.8 –73.6	–73.0 –73.1	–72.9 –72.4	–74.4 –73.7
7	–73.8 –73.8	–73.9 –73.8	–63.4 –73.2	–72.6 –73.8	–74.6 –72.6	–74.9 –73.7	–73.6 –73.5	–74.5 –72.9

Table II. AD831 Mixer Table, ±5 V Supplies, LO = –9 dBm

LO Level –9.0 dBm, LO Frequency 130.7 MHz, Data File imdTB13882
RF Level 0.0 dBm, RF Frequency 120 MHz
Temperature Ambient
Dut Supply ±5.00 V
VPOS Current 102 mA
VNEG Current 102 mA

Intermodulation table RF harmonics (rows) × LO harmonics (columns).
First row absolute value of nRF – mLO, and second row is the sum.

	0	1	2	3	4	5	6	7
0		–36.5 –36.5	–46.5 –46.5	–33.0 –33.0	–17.0 –17.0	–23.0 –23.0	–34.2 –34.2	–45.6 –45.6
1	–37.5 –37.5	0.0 –29.1	–41.2 –38.7	–41.1 –22.9	–38.5 –28.4	–29.0 –35.3	–31.7 –34.3	–47.4 –52.4
2	–45.9 –45.9	–45.2 –39.4	–47.6 –35.7	–61.5 –38.4	–53.7 –42.3	–43.5 –53.7	–41.5 –52.8	–41.8 –66.3
3	–46.4 –46.4	–53.0 –40.0	–67.0 –50.0	–43.0 –48.9	–60.9 –57.8	–47.9 –57.0	–50.7 –71.8	–41.0 –67.4
4	–45.1 –45.1	–56.0 –39.0	–48.7 –48.1	–64.6 –58.4	–53.5 –56.1	–55.7 –63.8	–53.5 –70.5	–51.1 –67.6
5	–35.2 –35.2	–45.3 –53.0	–54.1 –62.4	–54.1 –67.3	–53.7 –67.0	–57.9 –69.4	–66.6 –73.2	–64.3 –72.9
6	–63.4 –63.4	–41.1 –66.3	–53.6 –67.2	–66.5 –67.5	–58.8 –72.9	–63.3 –71.2	–61.7 –71.7	–71.4 –73.2
7	–67.3 –67.3	–65.8 –61.6	–37.8 –66.3	–54.6 –72.9	–62.5 –71.4	–71.7 –70.7	–55.2 –72.1	–57.1 –73.1

Table III. AD831 Mixer Table, ±3.5 V Supplies, LO = –20 dBm

LO Level –20.0 dBm, LO Frequency 130.7 MHz, Data File G1T1K_0771
RF Level 0.0 dBm, RF Frequency 120 MHz
Temperature Ambient
Dut Supply ±3.50 V
VPOS Current 55 mA
VNEG Current 57 mA
Intermodulation table RF harmonics (rows) × LO harmonics (columns).
First row absolute value of nRF – mLO, and second row is the sum.

	0	1	2	3	4	5	6	7
0		–45.2 –45.2	–35.7 –35.7	–16.1 –16.1	–21.6 –21.6	–22.3 –22.3	–32.0 –32.0	–36.4 –36.4
1	–30.3 –30.3	0.0 –29.7	–33.7 –28.2	–47.9 –24.4	–37.5 –26.0	–33.8 –47.4	–32.0 –35.9	–45.2 –49.7
2	–50.3 –50.3	–49.4 –41.0	–47.4 –51.4	–49.9 –34.7	–48.8 –49.8	–38.5 –48.6	–40.7 –68.5	–51. –67.9
3	–48.4 –48.4	–55.7 –52.9	–58.2 –50.0	–45.0 –64.5	–57.0 –62.8	–68.4 –73.4	–55.5 –74.0	–47.7 –71.8
4	–66.7 –66.7	–59.7 –65.9	–67.2 –78.1	–62.8 –74.2	–58.2 –77.5	–71.5 –74.4	–72.9 –77.9	–63.5 –77.5
5	–66.9 –66.9	–71.5 –76.3	–73.6 –78.1	–77.6 –78.2	–70.8 –78.1	–70.2 –78.0	–75.8 –77.9	–78.1 –77.9
6	–78.0 –78.0	–69.7 –78.3	–76.7 –78.3	–78.6 –78.2	–78.8 –78.1	–75.4 –78.0	–78.1 –77.9	–79.0 –77.8
7	–78.4 –78.4	–78.5 –78.3	–76.9 –78.2	–78.7 –78.2	–79.0 –77.9	–79.1 –77.9	–78.6 –77.8	–78.9 –77.5

Table IV. AD831 Mixer Table, ±5 V Supplies, 1 kΩ Bias Resistor, LO = –20 dBm

LO Level –20.0 dBm, LO Frequency 130.7 MHz, Data File G1T1K_3881
RF Level 0.0 dBm, RF Frequency 120 MHz
Temperature Ambient
Dut Supply ±3.50 V
VPOS Current 59 mA
VNEG Current 61 mA
Intermodulation table RF harmonics (rows) × LO harmonics (columns).
First row absolute value of nRF – mLO, and second row is the sum.

	0	1	2	3	4	5	6	7
0		–60.6 –60.6	–52.3 –52.3	–16.6 –16.6	–12.8 –12.8	–26.0 –26.0	–45.0 –45.0	–38.8 –38.8
1	–34.1 –34.1	0.0 –27.3	–35.2 –28.7	–41.8 –20.7	–29.8 –32.9	–29.1 –39.2	–35.3 –38.2	–49.0 –47.8
2	–46.6 –46.6	–48.8 –37.8	–40.1 –47.6	–52.2 –41.7	–57.9 –54.2	–38.6 –50.4	–45.8 –64.1	–47.7 –64.9
3	–41.3 –41.3	–58.8 –47.9	–59.5 –65.2	–41.8 –62.5	–61.2 –64.2	–58.1 –73.8	–57.5 –72.3	–54.0 –72.6
4	–53.9 –53.9	–52.5 –61.4	–73.7 –70.6	–68.1 –76.9	–60.3 –76.8	–71.0 –78.6	–63.4 –78.3	–62.3 –78.1
5	–66.9 –66.9	–65.8 –69.7	–76.6 –72.9	–75.2 –77.4	–65.4 –77.7	–70.0 –78.5	–73.6 –78.4	–68.7 –78.2
6	–77.4 –77.4	–73.3 –78.6	–73.8 –78.7	–78.8 –78.6	–79.2 –78.6	–73.6 –78.4	–74.9 –78.2	–79.3 –78.2
7	–78.9 –78.9	–79.0 –78.8	–77.9 –78.7	–78.0 –78.6	–79.3 –78.3	–79.5 –78.3	–79.3 –78.1	–79.3 –78.0

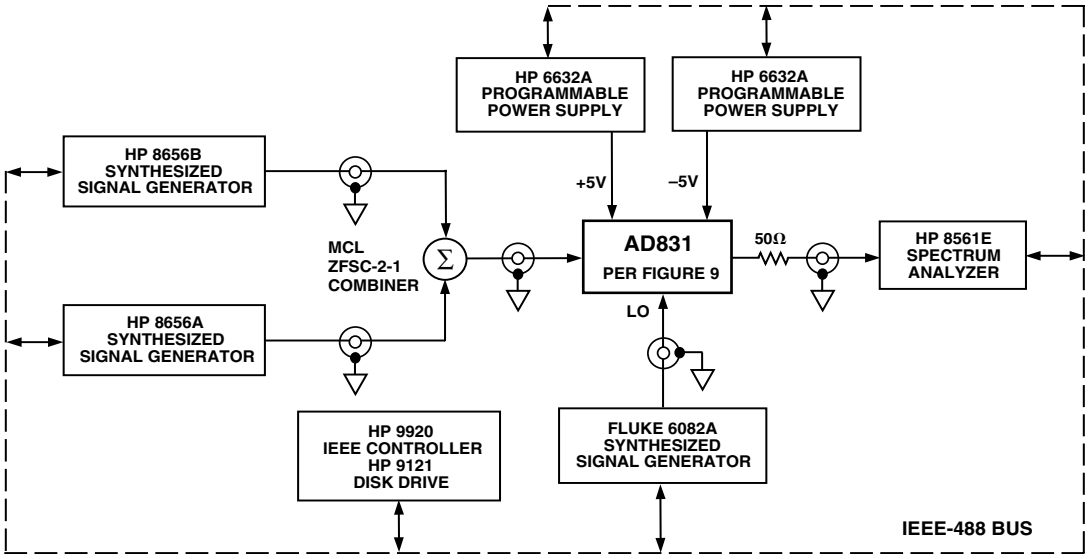

Figure 12. Third Order Intercept Characterization Setup

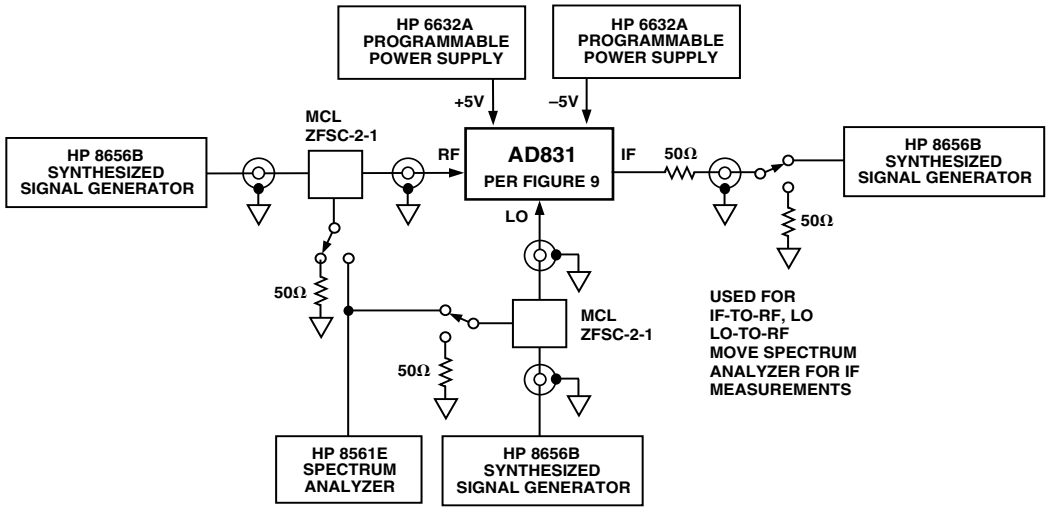

Figure 13. IF-to-RF Isolation Characterization Setup

OUTLINE DIMENSIONS

20-Lead Plastic Leaded Chip Carrier [PLCC]
(P-20A)

Dimensions shown in inches and (millimeters)

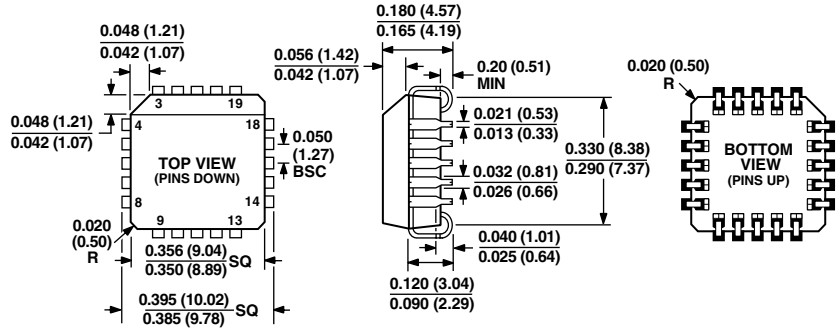

COMPLIANT TO JEDEC STANDARDS MO-047AA
CONTROLLING DIMENSIONS ARE IN INCHES; MILLIMETER DIMENSIONS
(IN PARENTHESES) ARE ROUNDED-OFF INCH EQUIVALENTS FOR
REFERENCE ONLY AND ARE NOT APPROPRIATE FOR USE IN DESIGN

C00882–0–6/03(C)

Revision History

Location	Page
6/03–Data Sheet Changed from REV. B to REV. C.	
Updated format	UNIVERSAL
Changes to Figure 10	11
Updated OUTLINE DIMENSIONS	16

Компания «ЭлектроПласт» предлагает заключение долгосрочных отношений при поставках импортных электронных компонентов на взаимовыгодных условиях!

Наши преимущества:

- Оперативные поставки широкого спектра электронных компонентов отечественного и импортного производства напрямую от производителей и с крупнейших мировых складов;
- Поставка более 17-ти миллионов наименований электронных компонентов;
- Поставка сложных, дефицитных, либо снятых с производства позиций;
- Оперативные сроки поставки под заказ (от 5 рабочих дней);
- Экспресс доставка в любую точку России;
- Техническая поддержка проекта, помощь в подборе аналогов, поставка прототипов;
- Система менеджмента качества сертифицирована по Международному стандарту ISO 9001;
- Лицензия ФСБ на осуществление работ с использованием сведений, составляющих государственную тайну;
- Поставка специализированных компонентов (Xilinx, Altera, Analog Devices, Intersil, Interpoint, Microsemi, Aeroflex, Peregrine, Syfer, Eurofarad, Texas Instrument, Miteq, Cobham, E2V, MA-COM, Hittite, Mini-Circuits,General Dynamics и др.);

Помимо этого, одним из направлений компании «ЭлектроПласт» является направление «Источники питания». Мы предлагаем Вам помощь Конструкторского отдела:

- Подбор оптимального решения, техническое обоснование при выборе компонента;
- Подбор аналогов;
- Консультации по применению компонента;
- Поставка образцов и прототипов;
- Техническая поддержка проекта;
- Защита от снятия компонента с производства.

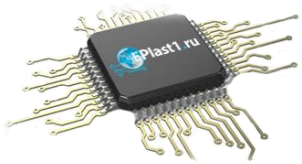

Как с нами связаться

Телефон: 8 (812) 309 58 32 (многоканальный)
Факс: 8 (812) 320-02-42
Электронная почта: org@eplast1.ru
Адрес: 198099, г. Санкт-Петербург, ул. Калинина, дом 2, корпус 4, литера А.